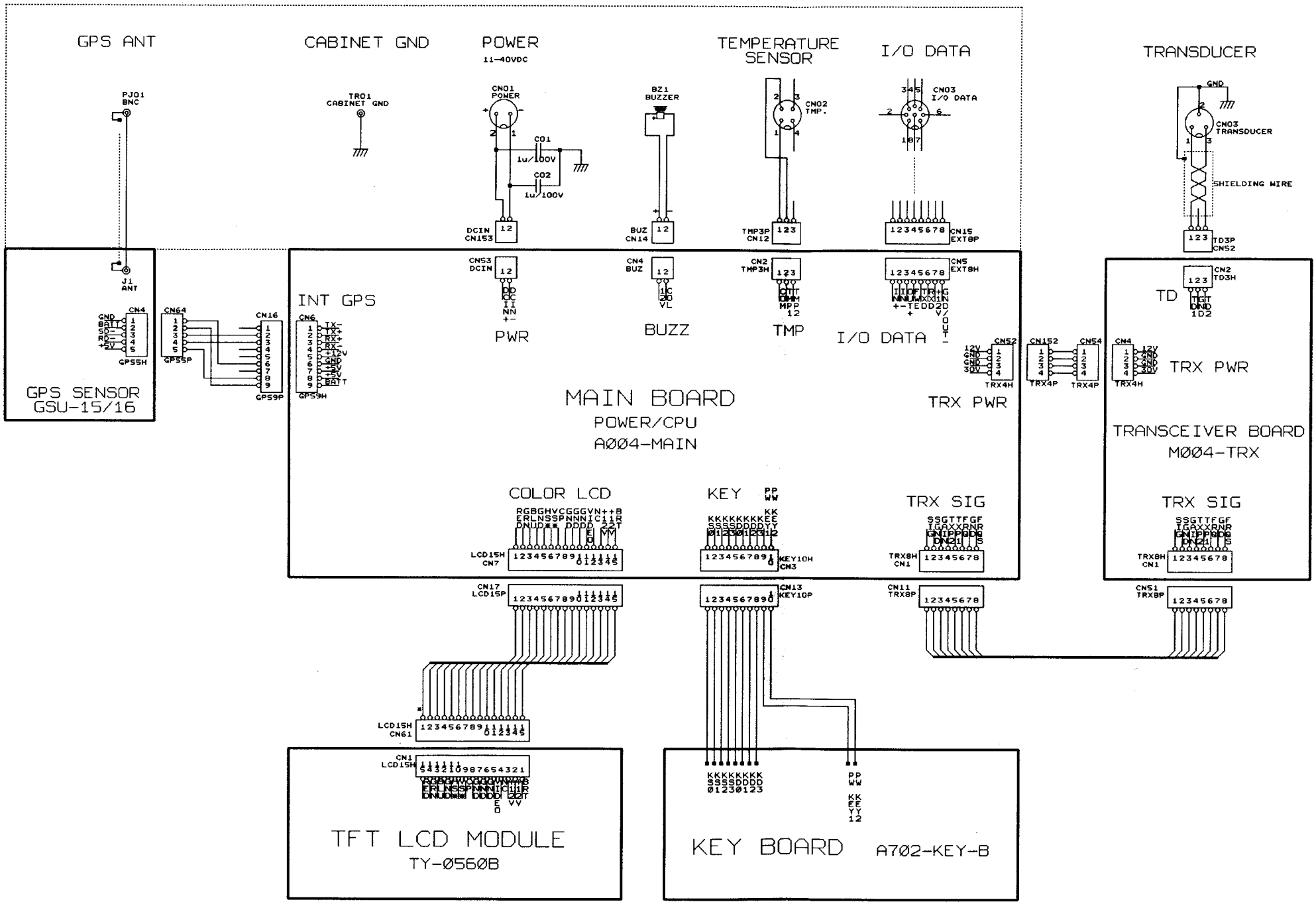

Size	Document Number	
C	V-2602P INTER-UNIT CONNECTIONS	R
Date: January 21, 2002	Sheet of	

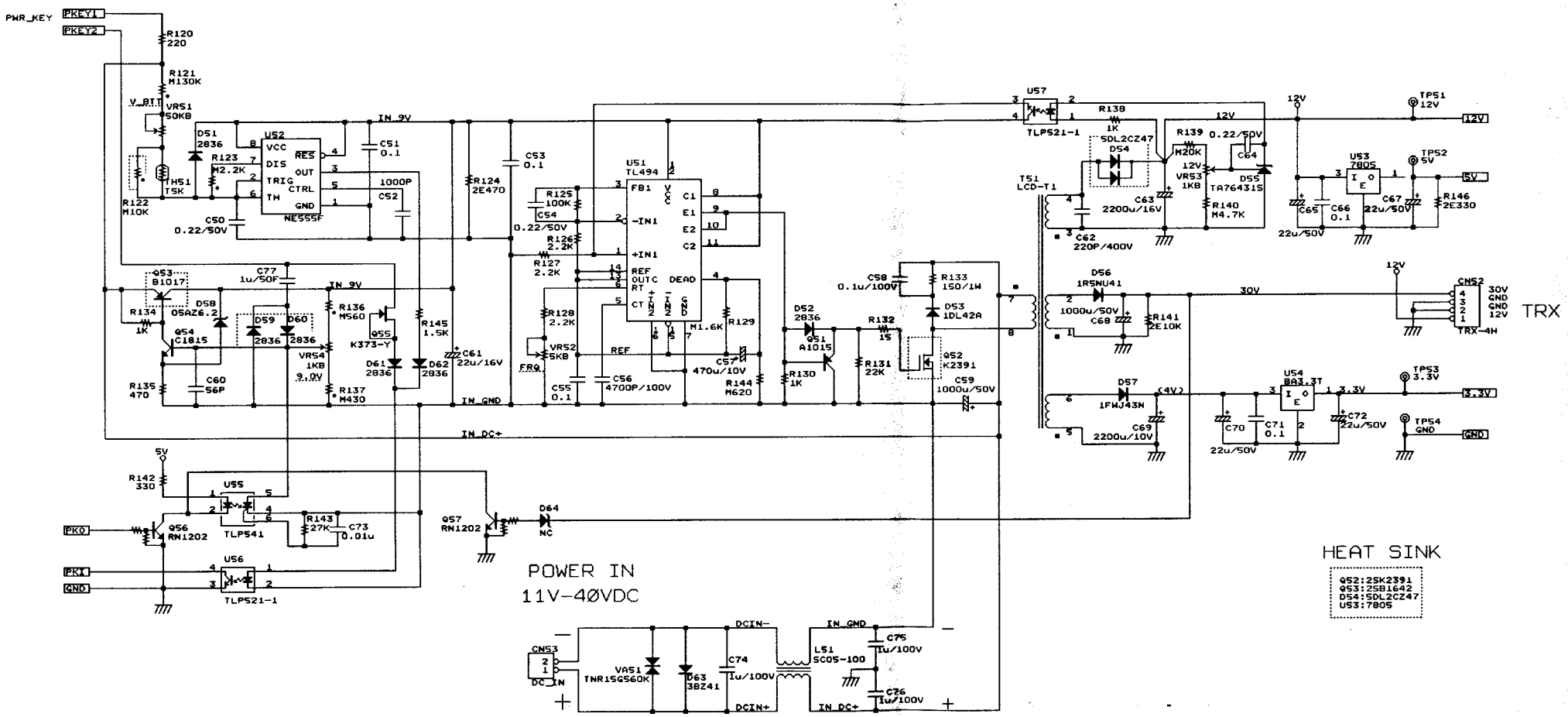

	M004-MAIN-8	
Size C	Document Number LCD MAIN BOARD (POWER)	REV
Date: March 8, 2002	Sheet 1 of 1	

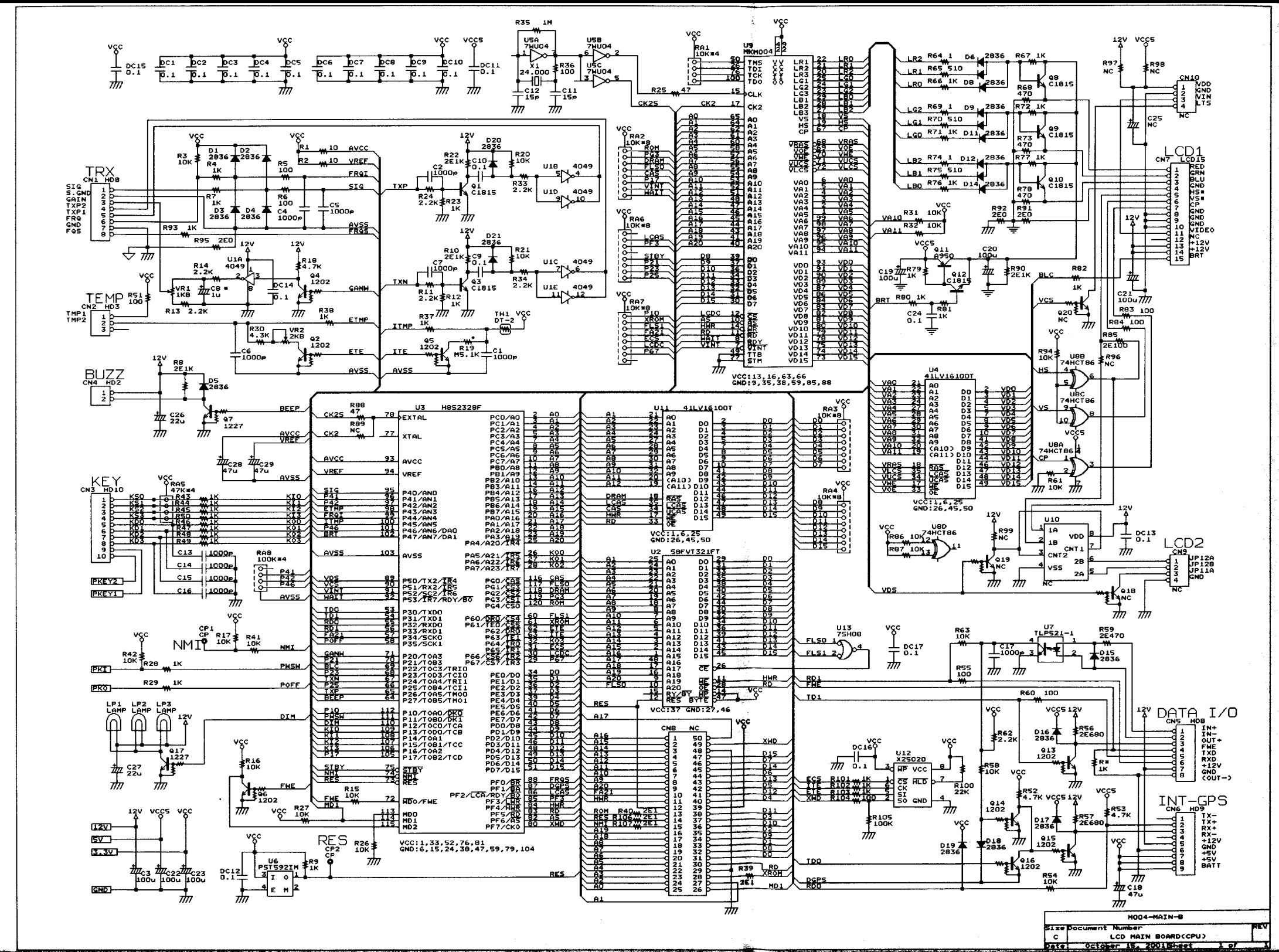
TRX
TEMP
BUZZ
KEY
NMI
RES
LCD1
LCD2
DATA I/O
INT-GPS
U3 H8S2328F
U9 MKM004
U11 41LV16100T
U2 58FVT321FT
U4 41LV16100T
U12 X25020
U13 7SH08
U7 TLP521-1
U10 CNT1 CNT2
U8B 74HCT86
U8C 74HCT86
U8A 74HCT86
U8D 74HCT86
U6 PST592IM
VCC:13,16,63,66
GND:9,35,38,59,85,88
VCC:1,6,25
GND:26,45,50
VCC:37 GND:27,46
VCC:1,33,52,76,81
GND:6,15,24,38,47,59,79,104
M004-MAIN-B
Size C
Document Number
LCD MAIN BOARD(CPU)
REV
Date: October 18, 2001 Sheet 1 of

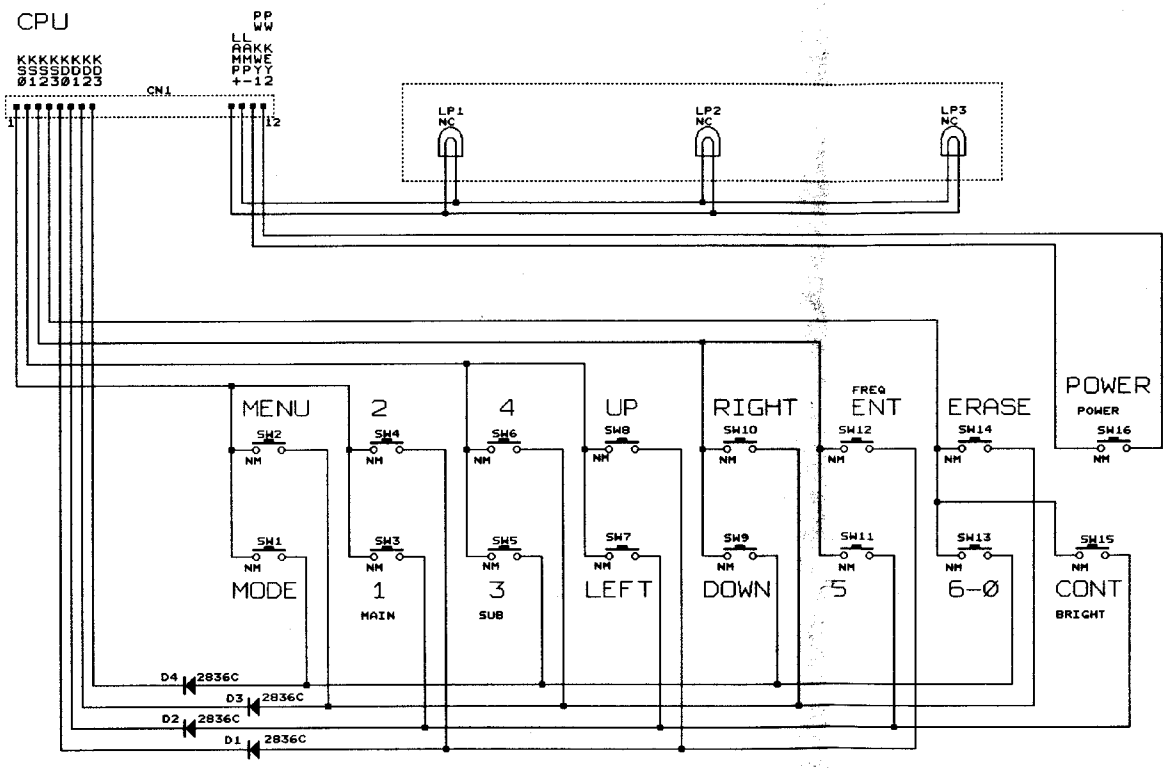

A702-KEY-B		
Size C	Document Number V2602L KEY BOARD	REV
Date: March 8, 2002	Sheet 1 of 1	