# PRIVATE CARS

# C2-C3-C3 PLURIEL-XSARA XSARA PICASSO-BERLINGO

# 2004

«The technical information contained in this document is intended for the exclusive use of the trained personnel of the motor vehicle repair trade. In some instances, this information could concern the security and safety of the vehicle. The information is to be used by the professional vehicle repairers for whom it is intended and they alone would assume full responsibility to the exclusion of that of the manufacturer».
«The technical information appearing in this brochure is subject to updating as the characteristics of each model in the range evolve. Motor vehicle repairers are invited to contact the CITROËN network periodically for further information and to obtain any possible updates».

**CAR 050014**
**Volume 1**

# PRESENTATION

**THIS HANDBOOK** summarises the specifications, adjustments, checks and special features of CITROEN private vehicles, not including UTILITY vehicles for which there exists a separate handbook.

The handbook is divided into nine groups representing the main functions :

GENERAL - ENGINE - INJECTION - IGNITION - CLUTCH, GEARBOX, DRIVESHAFTS - AXLES, SUSPENSION, STEERING - BRAKES - ELECTRICAL - AIR CONDITIONING.

In each section, the vehicles are dealt with in the following order: C2-C3-C3 PLURIEL XSARA -XSARA PICASSO - BERLINGO (1) and all models where applicable.

The information given in this handbook is based on vehicles marketed in EUROPE.

---

**(1) NOTE : The BERLINGO familiale appears only in :**
**- The correspondance tables for petrol and diesel engines.**
**- The general chapter.**
**For all the other chapters, see the Mechanics' Handbook for UTILITY vehicles.**

# IMPORTANT

If you find that this handbook does not always meet your requirements, **we invite you to send us your suggestions which we will take into account** when preparing future publications. For example :

- INSUFFICIENT INFORMATION
- SUPERFLUOUS INFORMATION
- NEED FOR MORE DETAILS

Please send your comments and suggestions to :

**CITROEN U.K. Ltd.**
**221, Bath Road,**
**SLOUGH,**
**SL1 4BA.**
**U.K.**

# XSARA 2, all types

Operation to reconnect the battery after a vehicle repair

**WARNING**

If the battery has been disconnected, after reconnecting it is **ESSENTIAL** to wait **1 minute** before switching on the ignition, otherwise the engine ECU will lock up.

If the ECU has locked up :

- Switch off the ignition.
- Wait **1 minute.**
- Switch the ignition back on, the ECU is unlocked.

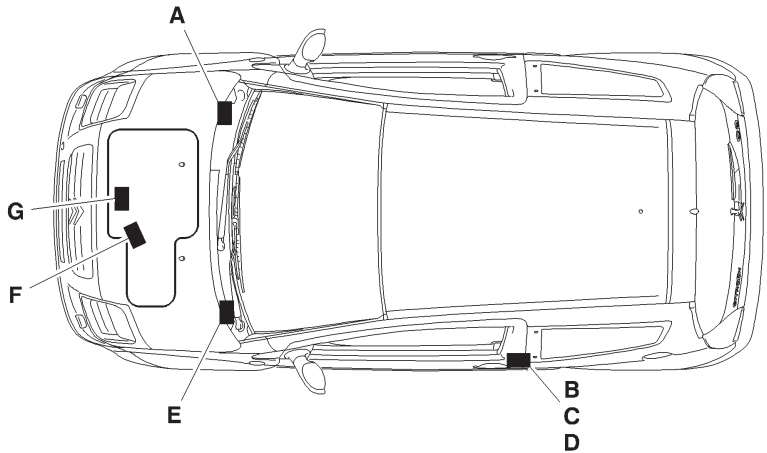


E1AP0C3D

**A -** Cold stamp
(Cold stamp engraved on the bodywork)

**B -** Manufacturer's name plate
(On the LH centre pillar)

**C -** AS/RP No. and RP paint code
(On the LH centre pillar)

**D -** Tyre pressures and tyre type
(On the LH centre pillar)

**E -** Serial number on bodywork

**F -** Gearbox ident. reference – Factory serial no.

**G -** Engine legislation type– Factory serial no.

| C2 | IDENTIFICATION OF VEHICLES | | | | | | | |
|---|---|---|---|---|---|---|---|---|
| | 1.1i<br>Pack - Pack ambiance | | 1.4i<br>Pack ambiance - VTR - Exclusive | | | | 1.6i 16V<br>VTR | |
| **Emission standard** | **L4** | **IFL5** | **L4** | **IFL5** | | | | |
| **Type code** | **JM HFXB** | **JM HFXC/IF (*)** | **JM KFVB/P** | **JM KFVC/PIF (**)** | **JM KFVC/IF (*)** | | **JM NFUC/PIF (*)** | |
| **Engine type** | HFX | | KFV | | | | NFU | |
| **Cubic capacity (cc)** | 1124 | | 1360 | | | | 1585 | |
| **Fiscal rating (hp)** | 4 | | 5 | | | | 6 | |
| **Gearbox type** | MA/5S | | MA/5N | | MA/5L | | MA/5S | MA/5L |
| **Gearbox ident. plate** | 20 CF 20 (m) **(4)**<br>RPO 9688 ➔ 9784<br>**20 CP 20 RPO 9919 ➔** | | 20 CF 21 (mp) **(3)**<br>RPO 9688 ➔ 9784<br>**20 CP 21 RPO 9786 ➔** | | 20 CF 25<br>**(1)** (m) **(4)**<br>**(5)** | 20 CF 16<br>**(2)** (m) **(4)**<br>**(6)** | 20 CN 48<br>(mp) **(3)**<br>**(7)** | 20 CN 50<br>(mp) **(3)**<br>**(8)** |

**(1)** = Europe. (*) = IF. **(3)** mp = Piloted manual gearbox
**(2)** = DAIC. (**) = PIF. **(4)** m = Manual gearbox

**(5)** = 20 CF 25 RPO 9919 ➔ 9784 **20 CP 24 RPO 9919 ➔**
**(6)** = 20 CF 16 RPO 9688 ➔ 9784 **20 CP 16 RPO 9919 ➔**
**(7)** = 20 CN 48 RPO 9688 ➔ 9784 **20 CP 64 RPO 9786 ➔**
**(8)** = 20 CN 50 RPO 9688 ➔ 9784 **20 CP 66 RPO 9786 ➔**

| IDENTIFICATION OF VEHICLES | | | | | C2 |
|---|---|---|---|---|---|
| | 1.4 HDi<br>Pack - Pack ambiance - Exclusive | | | | |
| **Emission standard** | **L4** | | **IFL5** | | |
| **Type code** | **JM 8HXB** | | **JM 8HXC/IF (*)** | | **JM 8HXC/PIF (**)** |
| **Engine type** | 8HX | | | | |
| **Cubic capacity (cc)** | 1398 | | | | |
| **Fiscal rating (hp)** | 4 | | | | |
| **Gearbox type** | MA/50 | | | | |
| **Gearbox ident. plate** | 20 CN 51 **(1)**<br>(m) **(4)**<br>**(5)** | 20 CN 33 **(2)**<br>(m) **(4)**<br>**(6)** | 20 CN 51 **(1)**<br>(m) **(4)**<br>**(5)** | 20 CN 33 **(2)**<br>(m) **(4)**<br>**(6)** | 20 CN 49<br>(mp) **(3)**<br>**(7)** |

**(1)** = Europe. (*) = IF. **(3)** mp = Piloted manual gearbox
**(2)** = DAIC. (**) = PIF. **(4)** m = Manual gearbox

**(5)** = 20 CN 51 RPO 9688 ➔ 9784 **20 CP 67 RPO 9919 ➔**
**(6)** = 20 CN 33 RPO 9688 ➔ 9784 **20 CP 54 RPO 9919 ➔**
**(7)** = 20 CN 49 RPO 9688 ➔ 9784 **20 CP 65 RPO 9786 ➔**

| C2 - C3 | OPERATIONS TO BE CARRIED ORT AFTER A REPAIR |
|---|---|

**IMPERATIVE:** All these operations are to be performed following **a reconnection of the battery.**

**Antiscanning function.**
It is necessary to wait 1 minute after the battery has been disconnected in order to be able to start the vehicle.

**Tailgate.**
The opening of the tailgate is deactivated on reconnection of the battery.
Perform locking/unlocking to activate the opening of the tailgate.

**Overspeed check.**
The vehicle's overspeed values have to be re-initialised.
The button on the wiper stalk *(multifunction display B or C)* or the button on the dashboard *(multifunction display A or clock)* operates the following functions:

- Activation of the vehicle's overspeed function.
- Programming of the overspeed alert.

**Electric windows.**
It may be necessary to re-initialise the sequential and anti-pinch functions.

**NOTE:** If the window is open at the time the battery is reconnected, action the window switch several times to close it, then re-initialise.
Open the window fully.
Action and release the window switch until the window is complandely closed.
This operation has to be carried ort on each electric window.

**Sun roof.**
The anti-pinch function has to be re-initialised.
Place the sun roof switch in the maximum tilt position.
Keep the sun roof switch pressed until the sun roof ceases its movement.
Release the sun roof switch within 5 seconds.
Keep the sun roof switch pressed until the end of the sun roof opening sequence.

**Multifunction screen.**
It is necessary to adjust the date, time and ortside temperature.
Adjust the display language of the multifunction screen if necessary.

**NOTE:** The default display language of the multifunction screen is French.

**Navigation.**
Warning, the vehicle has to be in the open air *(on switching on the ignition, the ECU searches for satellites)*.
Vehicle location is only effective after some ten minutes.
Reprogramme the customer paramanders.

**Radio.**
Reprogramme the radio stations.

**Radiotelephone RT3.**
Reprogramme the radio stations.

| C3 | IDENTIFICATION OF VEHICLES |
|---|---|

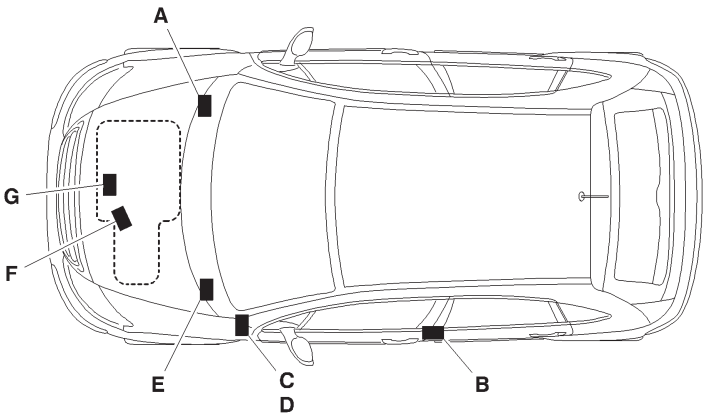


E1AP09HD

**A -** Cold stamp
(Cold stamp engraved on the bodywork).

**B -** Manufacturer's name plate
(On the LH centre pillar)

**C -** AS/RP No. and RP paint code.
(label affixed to the front pillar on driver's side)

**D -** Tyre pressures and tyre type.
(label affixed to the front pillar on driver's side)

**E -** Serial number on bodywork.

**F -** Gearbox ident. reference – Factory serial no.

**G -** Engine legislation type– Factory serial no.

| IDENTIFICATION OF VEHICLES | | | | | | | | C3 |
|---|---|---|---|---|---|---|---|---|
| | Petrol | | | | | | | |
| | 1.1i | | | | | | | |
| | Pack - Pack ambiance | | | | Entreprise Pack | Pack - Pack ambiance | | |
| **Emission standard** | K’ | L4/INF | L4 | | | | IFL5 | |
| **Type code** | FC HFX5 | FC HFXB/D | FC HFXB | FN HFXB | FC HFXB/T | FR HFXB | FC HFXC/IF | FN HFXC/IF |
| **Engine type** | HFX | | | | | | | |
| **Cubic capacity (cc)** | 1124 | | | | | | | |
| **Fiscal rating (hp)** | 4 | | | | | | | |
| **Gearbox type** | MA/5N | | | | | | | |
| **Gearbox ident. plate** | 20 CP 14 (m) **(1)** (*) | | | | | | | |

**(1)** m = Manual gearbox
(*) **EXPORT and DAIC =** 20 CP 17 (14x60) (21x18).

| C3 | IDENTIFICATION OF VEHICLES | | | | | | | | | |
|---|---|---|---|---|---|---|---|---|---|---|
| | PETROL | | | | | | | | | |
| | 1.4i | | | | | | | | | |
| | | | | | | AUTO. | | | | |
| | Pack - Pack ambiance - Pack clim - Exclusive | | | | | | | | | |
| **Emission standard** | **L4/INF** | **L4** | | **IFL5** | | **L4/INF** | **L4** | | **IFL5** | |
| **Type code** | **FC KFVB/D** | **FC KFVB** | **FN KFVB** | **FC KFVC/IF** | **FN KFVC/IF** | **FC KFVE/D** | **FN KFVE** | **FC KFVE** | **FC KFVF/IF** | **FN KFVF/IF** |
| **Engine type** | KFV | | | | | | | | | |
| **Cubic capacity (cc)** | 1360 | | | | | | | | | |
| **Fiscal rating (hp)** | 5 | | | | | | | | | |
| **Gearbox type** | MA/5L | MA/5N | | | | AL4 | | | | |
| **Gearbox ident. plate** | 20 CP 15 (m) **(1)** (*) | | | | | 20 TP 75 | | | | |

**(1)** m = Manual gearbox

(*) **EXPORT =** 20 CP 16 (m) (1).

| IDENTIFICATION OF VEHICLES | | | | | | | C3 |
|---|---|---|---|---|---|---|---|
| | PETROL | | | | | | |
| | 1.4i 16V<br>SensoDrive | | 1.6i 16V<br>Pack ambiance - Pack clim - Exclusive | | | | |
| **Emission standard** | L5 | | L4 | | IF/L5 | | |
| **Type code** | FC KFUC/P | FC KFUN/P | FN NFUB | FC NFUB | FC NFUC/IF | FC NFUC/PIF | |
| **Engine type** | KFU | | NFU | | | | |
| **Cubic capacity (cc)** | 1360 | | 1587 | | | | |
| **Fiscal rating (hp)** | 6 | | | | | | |
| **Gearbox type** | MA/5S | | | | | | |
| **Gearbox ident. plate** | 20 CP 56 (mp) **(2)** | | 20 CP 58 (m) **(1)** 20 CP 56 (mp) **(2)** | | | | |

**(1)** m = Manual gearbox
**(2)** mp = Piloted manual gearbox

| C3 | IDENTIFICATION OF VEHICLES | | | | | | | |
|---|---|---|---|---|---|---|---|---|
| | Diesel | | | | | | | |
| | 1.4 HDi | | | | | | | |
| | Entreprise<br>Entreprise club<br>Entreprise Pack | | | Pack | | | | |
| Emission standard | L4 | | | | | | | |
| Type code | FC 8HXB/T | FN 8HXB | FC 8HXB | FC 8HXB/MOD | FC 8HXK | FR 8HXB | FN 8HWB | FC 8HWB |
| Engine type | 8HX | | | | | | 8HW | |
| Cubic capacity (cc) | 1398 | | | | | | | |
| Fiscal rating (hp) | 4 | | | | | | | |
| Gearbox type | MA/50 | | | | | | | |
| Gearbox ident. plate | 20 CP 54 (m) **(1)** (*) | | | | 20 CP 65 (mp) **(2)** | | | |

**(1)** m = Manual gearbox
**(2)** mp = Piloted manual gearbox
**(*) EXPORT and DAIC =** 20 CP 55 (m) **(1)** and 20 CP 72 (m) **(1)**.

| IDENTIFICATION OF VEHICLES | | | | | | | | C3 |
|---|---|---|---|---|---|---|---|---|
| | Diesel | | | | | | | |
| | 1.4 HDi 16V | | | | | | | |
| | Pack - Pack ambiance - Pack clim Exclusive | | | Pack clim | | Pack - Pack ambiance - Pack clim Exclusive | | |
| Emission standard | L4 | | | | | | | |
| Type code | FC 8HVB | FN 8HVB | FC 8HYB | FC 8HYB/T | FC 8HYB/MOD | FC 8HYK | FN 8HYB | FR 8HYB |
| Engine type | 8HV | | 8HY | | | | | |
| Cubic capacity (cc) | 1398 | | | | | | | |
| Fiscal rating (hp) | 5 | | | | | | | |
| Gearbox type | BE4/5L | | | | | | | |
| Gearbox ident. plate | 20 DM 25 (m) **(1)** | | 20 DM 26 (m) **(1)** | | | | | |

**(1)** m = Manual gearbox

# C3 PLURIEL — IDENTIFICATION OF VEHICLES

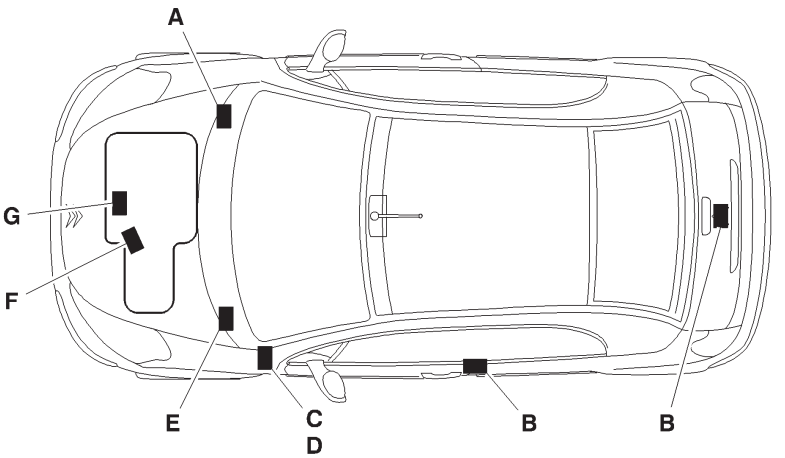


E1AP0B2D

**A -** Cold stamp
(Cold stamp engraved on the bodywork).

**B -** Manufacturer's name plate
(On the LH centre pillar)

**C -** AS/RP No. and RP paint code.
(label affixed to the front pillar on driver's side)

**D -** Tyre pressures and tyre type.
(label affixed to the front pillar on driver's side)

**E -** Serial number on bodywork.

**F -** Gearbox ident. reference – Factory serial no.

**G -** Engine legislation type– Factory serial no.

| IDENTIFICATION OF VEHICLES | | | | C3 PLURIEL |
|---|---|---|---|---|
| | Petrol | | | Diesel |
| | 1.4i | | 1.6i 16V<br>SensoDrive | 1.4 HDi |
| **Emission standard** | **L4** | **IF/L5** | **IF/L5** | |
| **Type code** | **HB KFVB** | **HB KFVC/IF** | **HB NFUC/IF** | **HB 8HXB** |
| **Engine type** | KFV | | NFU | 8HX |
| **Cubic capacity (cc)** | 1360 | | 1587 | 1398 |
| **Fiscal rating (hp)** | 5 | | 6 | 4 |
| **Gearbox type** | MA/5N | | MA/5S | MA/50 |
| **Gearbox ident. plate** | 20 CP 60 (m) **(1)** | | 20 CP 63 (mp) **(2)** | 20 CP 71 (m) **(1)** |

**(1)** m = Manual gearbox
**(2)** mp = Piloted manual gearbox

# IDENTIFICATION OF VEHICLES



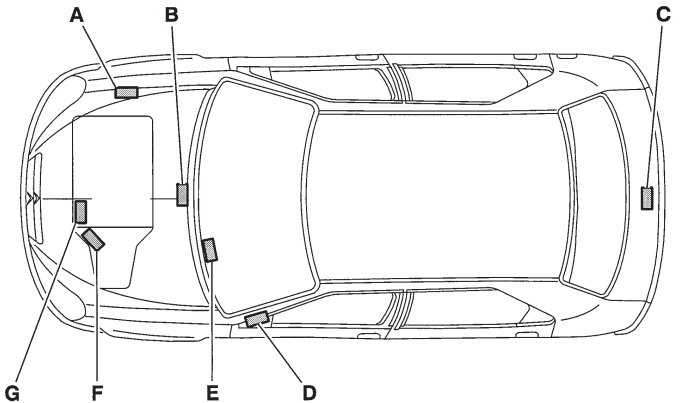


E1AP08WD

**A -** Manufacturer's name plate (Estate).

**B -** Chassis stamp, cold stamp.

**C -** Manufacturer's name plate (Saloon).

**D -** Label :
(label affixed to the front pillar on driver's side)
- Tyre pressures.
- RP organisation no.
- Paint code.

**E -** Serial number. (visible throrgh the windscreen)

**F -** Engine legislation type.
Factory serial no.

**G -** Gearbox ident. reference.
Factory serial no.

| IDENTIFICATION OF VEHICLES | | | | | | XSARA II |
|---|---|---|---|---|---|---|
| | Saloon petrol 3-door | | | | | |
| | 1.4i | | 1.6i 16V | | | |
| | | | | AUTO. | | AUTO. |
| | Océanic Pack | X - VTR | Pack VTR - VTS | SX | VTR - VTS | VTR |
| **Emission standard** | L4 | L5/IF | L4 | | L5/IF | |
| **Type code** | NO KFWB | NO KFW1/IF | NO NFUB | NO NFUN | NO NFU1/IF | NO NFU3/IF |
| **Engine type** | KFW | | NFU | | | |
| **Cubic capacity (cc)** | 1360 | | 1581 | | | |
| **Fiscal rating (hp)** | 5 | | 7 | | | |
| **Gearbox type** | MA/5 | | MA/5 | AL4 | MA/5 | AL4 |
| **Gearbox ident. plate** | 20 CP 13 | | 20 CP 51 (*) | 20 TP 49 | 20 CP 51 (*) | 20 TP 49 |

**(*) NFU DAIC =** 20 CP 52 (14x60) (21x18).

| XSARA II | IDENTIFICATION OF VEHICLES | | | |
|---|---|---|---|---|
| | Saloon petrol 3-door | | | |
| | 2.0i 16V | | | |
| | | AUTO. | | |
| | VTS | | | |
| **Emission standard** | **L5/IF** | **L4/IF** | **L5/IF** | **L4** |
| **Type code** | **NO RFN1/IF** | **NO RFNN/IF** | **NO RFN3/IF** | **NO RFSB** |
| **Engine type** | RFN | | | RFS |
| **Cubic capacity (cc)** | 1998 | | | |
| **Fiscal rating (hp)** | 8 | 9 | | 11 |
| **Gearbox type** | BE4/5 | AL4 | | BE3/5 |
| **Gearbox ident. plate** | 20 DL 40<br>20 DM 03 **(1)** | 20 TP 47 | | 20 TE 47 |

**(1) =** Right hand drive : Hydraulic clutch control.

| IDENTIFICATION OF VEHICLES | | | | | XSARA II |
|---|---|---|---|---|---|
| | Saloon diesel 3-door | | | | |
| | 1.4 HDi | 1.9 D | 2.0 HDi | | |
| | | | | | AUTO. |
| | Pack | Océanic<br>Pack club | Océanic - Pack<br>VTR - VTS | | SX |
| **Emission standard** | L4 | | | | |
| **Type code** | N0 8HZB | N0 WJYB | N0 RHYB | N0 RHZB | N0 RHZN |
| **Engine type** | 8HZ | WJY | RHY | RHZ | |
| **Cubic capacity (cc)** | 1398 | 1868 | 1997 | | |
| **Fiscal rating (hp)** | 4 | 5 | | 6 | |
| **Gearbox type** | BE4/5 | | | | AL4 |
| **Gearbox ident. plate** | 20 DM 54 | 20 DL 41<br>20 DM 05 **(1)** | 20 DL 42<br>20 DM 07 **(1)** (*) | 20 DM 10<br>20 DM 11 **(1)** | 20 TP 48 |

**(1) =** Right hand drive : Hydraulic clutch control.
**(*) DAIC DAD =** 20 DM 08.

| XSARA II | IDENTIFICATION OF VEHICLES | | | | | |
|---|---|---|---|---|---|---|
| | Saloon petrol 5-door | | | | | |
| | 1.4i | | 1.6i 16V | | | |
| | | | | AUTO. | | AUTO. |
| | Pack | | Océanic - Pack Exclusive | Exclusive | X - SX Exclusive | |
| **Emission standard** | L4 | L5 | L4 | | L5/IF | |
| **Type code** | N1 KFW1/IF | N1 KFW1/IF | N1 NFUB | N1 NFUN | N1 NFU1/IF | N1 NFU3/IF |
| **Engine type** | KFW | | NFU | | | |
| **Cubic capacity (cc)** | 1360 | | 1587 | | | |
| **Fiscal rating (hp)** | 5 | | 7 | | 8 | |
| **Gearbox type** | MA/5 | | MA/5 | AL4 | MA/5 | AL4 |
| **Gearbox ident. plate** | 20 CP 13 | | 20 CP 51 (*) | 20 TP 49 | 20 CP 51 (*) | 20 TP 49 |

**(*) NFU DAIC =** 20 CP 52 (14x60) (21x18).

| IDENTIFICATION OF VEHICLES | | | XSARA II |
|---|---|---|---|
| | Saloon petrol 5-door | | |
| | 2.0i 16V | | |
| | | AUTO. | |
| | Exclusive | | |
| **Emission standard** | **L5/IF** | **L4** | **L5/IF** |
| **Type code** | **N1 RFN1/IF** | **N1 RFNN** | **RFN3/IF** |
| **Engine type** | RFN | | |
| **Cubic capacity (cc)** | 1998 | | |
| **Fiscal rating (hp)** | 8 | 9 | |
| **Gearbox type** | BE4/5 | AL4 | |
| **Gearbox ident. plate** | 20 DL 40<br>20 DM 03 **(2)** | 20 TP 47 | |

**(1)** = Right hand drive : Hydraulic clutch control.
**(2)** = Right hand drive : Hydraulic clutch control.

| XSARA II | IDENTIFICATION OF VEHICLES | | | | |
|---|---|---|---|---|---|
| | Saloon diesel 5-door | | | | |
| | 1.4 HDi 16V | 1.9 D | 2 HDi | | AUTO. |
| | Pack - Leader | Océanic - Pack | Océanic - Leader - Leader Pack - Exclusive | | |
| **Emission standard** | L4 | | | | |
| **Type code** | N1 8HZB | N1 WJYB | N1 RHYB | N1 RHZB | N1 RHZN |
| **Engine type** | 8HZ | WJY | RHY | RHZ | |
| **Cubic capacity (cc)** | 1398 | 1868 | 1997 | | |
| **Fiscal rating (hp)** | 4 | 5 | | 6 | |
| **Gearbox type** | BE4/5 | | | | AL4 |
| **Gearbox ident. plate** | 20 DM 54 | 20 DL 41<br>20 DM 05 **(1)** | 20 DL 42<br>20 DM 07 **(1) (*)** | 20 DM 10<br>20 DM 11 **(1)** | 20 TP 48 |

**(1) =** Right hand drive : Hydraulic clutch control.
**(*) DAIC DAD =** 20 DM 08.

| IDENTIFICATION OF VEHICLES | | | | | | XSARA II |
|---|---|---|---|---|---|---|
| | Estate petrol | | | | | |
| | 1.4i | | 1.6i 16V | | | |
| | | | | | AUTO. | |
| | X - Pack | | Océanic - Pack Exclusive | | Exclusive | |
| **Emission standard** | **L4** | **L5/IF** | **L4** | | **L5/IF** | |
| **Type code** | **N2 KFWB** | **N2 KFW1/IF** | **N2 NFUB** | **N2 NFU1/IF** | **N2 NFUN** | **N2 NFU3/IF** |
| **Engine type** | KFW | | NFU | | | |
| **Cubic capacity (cc)** | 1360 | | 1581 | | | |
| **Fiscal rating (hp)** | 5 | | 7 | | | |
| **Gearbox type** | MA/5 | | MA/5 | | AL4 | |
| **Gearbox ident. plate** | 20 CP 44 | | 20 CP 51 **(*)** | | 20 TP 49 | |

| XSARA II | IDENTIFICATION OF VEHICLES | | | | | | | |
|---|---|---|---|---|---|---|---|---|
| | Estate petrol | | | Estate diesel | | | | |
| | 2.0i 16V | | | 1.4 HDi | 1.9 D | 2.0 HDi | | |
| | | | AUTO. | | | | | AUTO. |
| | Exclusive | | | X - Pack | Océanic Pack | Océanic - Pack - Exclusive | | |
| **Emission standard** | L5/IF | L4 | | | | | | |
| **Type code** | N2 RFN1/IF | N2 RFNN | N2 RFN3/IF | N2 8HZB | N2 WJYB | N2 RHYB | N2 RHZB | N2 RHZN |
| **Engine type** | RFN | | | 8HZ | WJY | RHY | RHZ | |
| **Cubic capacity (cc)** | 1998 | | | 1398 | 1868 | 1997 | | |
| **Fiscal rating (hp)** | 8 | | 9 | 4 | 5 | | 6 | |
| **Gearbox type** | BE4/5 | | AL4 | BE4/5 | | | | AL4 |
| **Gearbox ident. plate** | 20 DL 40<br>20 DM 03 **(1)** | | 20 TP 47 | 20 DM 54 | 20 DL 41<br>20 DM 05<br>**(1)** | 20 DL 42<br>20 DM 07<br>**(1) (*)** | 20 DM10<br>20 DM 11<br>(1) | 20 TP 48 |

**(1) =** Right hand drive : Hydraulic clutch control.
**(*) DAIC DAD =** 20 DM 08.

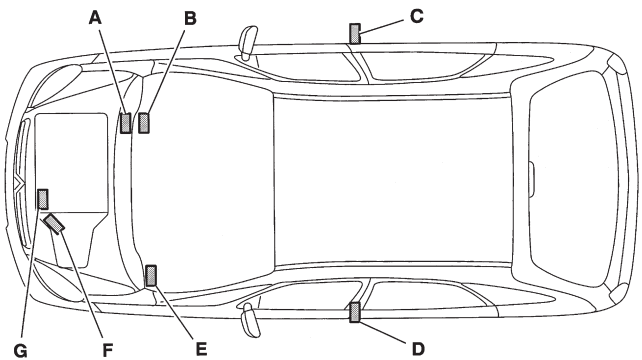


E1AP088D

**A -** Chassis stamp
(Cold stamp on bodywork)

**B -** Chassis no. reminder
(Label located at bottom of windscreen right hand side)

**C -** Manufacturer's data plate.
(Located at bottom of RH central pillar)

**D -** Label :
- Tyre pressures.
- Tyre identification.
- Spare wheel identification.

(Located on front LH door inner panel).

**E -** Label :
- Factory code.
- A-S / RP N°
- Paint code.

(Located on fuse box cover)

**F -** Gearbox identification ref.

**G -** Engine legislation type.
Factory serial number.

| XSARA PICASSO | IDENTIFICATION OF VEHICLES | | | |
|---|---|---|---|---|
| | Petrol | | | |
| | 1.6i | 1.8i 16V | | 2.0i 16V |
| | | | | AUTO. |
| | Océanic - Pack | Océanic - Pack - Exclusive | | Exclusive |
| **Emission standard** | **L4** | | **IFL5** | |
| **Type code** | **CH NFVB** | **CH 6FZB** | **CH 6FZC/IF** | **CH RFNF/IF** |
| **Engine type** | NFV | 6FZ | | RFN |
| **Cubic capacity (cc)** | 1587 | 1749 | | 1998 |
| **Fiscal rating (hp)** | 6 | 7 | | 9 |
| **Gearbox type** | BE4/5/ J **(*)** | BE4/5 V **(*)** | | AL4 |
| **Gearbox ident. plate** | 20 DL 67 | 20 DL 69 | | 20 TS 02 |

**(*) L,J V** = Corresponds to the stepping of the gears.

| IDENTIFICATION OF VEHICLES | | | XSARA PICASSO |
|---|---|---|---|
| | Diesel | | |
| | 1.6 HDi 16V | | 2.0 HDi<br>Océanic - Leader - Pack - Exclusive |
| **Emission standard** | L4 | | |
| **Type code** | **CH 9HZC** | **CH 9HYB** | **CH RHYB** |
| **Engine type** | 9HZ **(*)** | 9HY **(**)** | RHY |
| **Cubic capacity (cc)** | 1560 | | 1997 |
| **Fiscal rating (hp)** | | 6 | 5 |
| **Gearbox type** | BE4/5L | | BE4/5L |
| **Gearbox ident. plate** | 20 DM 62 | | 20 DL 65 |

**(*)** = With particle filter (FAP).
**(**)** = Withort particle filter (FAP).

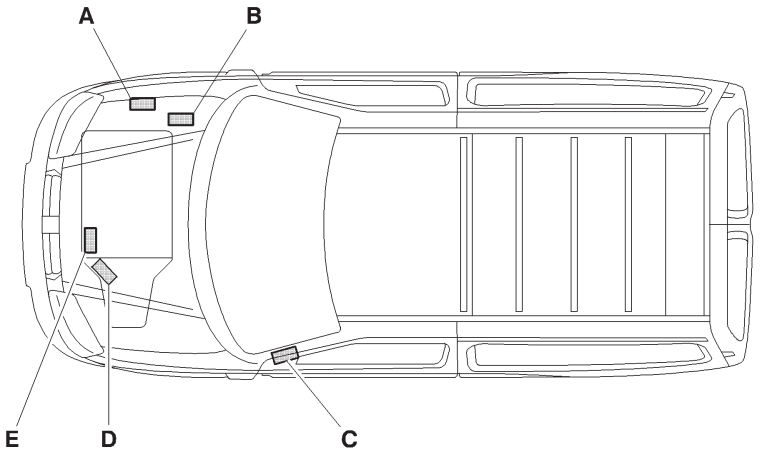


E1AP0AMD

**A -** Chassis stamp, cold stamp

**B -** Manufacturer's vehicle plate

**C -** Label
- RPO No.
- Paint colorr code
- Tyre pressures

**D -** Gearbox ident. reference - Factory serial no.

**E -** Engine legislation type - Factory serial no.

| | Berlingo petrol 5-seater | | |
|---|---|---|---|
| | 1.1i<br>X | 1.4i<br>X - SX - Multispace | |
| **Emission standard** | **L4/W4** | **L4/W4** | **IFL5** |
| **Type code** | **GJ HFXB** | **GJ KFWB** | **GJ KFWC/IF** |
| **Engine type** | HFX | KFW | |
| **Cubic capacity (cc)** | 1124 | 1360 | |
| **Fiscal rating (hp)** | 5 | 6 | |
| **Gearbox type** | MA/5S | MA/5L | |
| **Gearbox ident. plate** | 20 CD 43 | 20 CN 13 | |

| BERLINGO | IDENTIFICATION OF VEHICLES | | | |
|---|---|---|---|---|
| | Berlingo petrol 5-seater | | | |
| | 1.4i | | 1.6i 16V | |
| | Dual fuel | | | |
| | Multispace | | X - SX - Multispace | |
| Emission standard | L4 | | | IFL5 |
| Type code | GJ KFWB/GL (1) | GJ KFWB/GN (2) | GJ NFUB | GJ NFUC/IF |
| Engine type | KFW | | NFU | |
| Cubic capacity (cc) | 1360 | | 1587 | |
| Fiscal rating (hp) | 5 | | 7 | |
| Gearbox type | MA/5 | | BE4/5 | |
| Gearbox ident. plate | 20 CN 13 | | 20 DM 46 | |

**(1) GL** = LPG = Liquefied Petroleum Gas, with ring-shaped tank.
**(2) GN** = CNG = Compressed Natural Gas, with cylindrical tank.

| | Berlingo diesel 5-seater | | |
|---|---|---|---|
| | 1.9 D<br><br>X - SX - Multispace | | 2.0 HDi<br><br>X - SX - Multispace |
| **Emission standard** | L4 | | |
| **Type code** | GJ WJYB | GJ WJYB/PMF (1) | GJ RHYB |
| **Engine type** | WJY | | RHY |
| **Cubic capacity (cc)** | 1868 | | 1997 |
| **Fiscal rating (hp)** | 5 | | 6 |
| **Gearbox type** | BE4/5 | | BE4/5 |
| **Gearbox ident. plate** | 20 DM 48 | | 20 DM 50 |

**(1) /PMF** = Multifunction roof.

## CAPACITIES (in litres)

**Draining mandhod.**

**The oil capacities are defined according to the following mandhods.**

**1/** Vehicle on level surface *(in high position, if equipped with hydropneumatic suspension)*.

**2/** Engine warm *(oil temperature **80°C**)*.

**3/** Draining of the oil sump + removal of the cartridge *(duration of draining + dripping = **15 min**)*.

**4/** Refit plug + cartridge.

**5/** Engine filling.

**6/** Engine starting *(allowing the cartridge to be filled)*.

**7/** Engine stopped *(stationary for **5 min**)*.

**ESSENTIAL: Systematically check the oil level using the oil dipstick.**

| CAPACITIES (in litres) | | | | | C2 |
|---|---|---|---|---|---|
| | C2 | | | | |
| | Petrol | | | Diesel | |
| | 1.1i | 1.4i | 1.6i 16V | 1.4 HDi | |
| Engine type | HFX | KFV | NFU | 8HX → RPO 9884 | 8HX RPO 9885 → |
| Drain by gravity : engine with filter change | 3 | | 3,25 | 3,75 | |
| Bandween min. and max. | 1,5 | | | 1,8 | 1,5 |
| MA5 5-speed gearbox | 2 | | | | |
| MA5 piloted 5-speed gearbox | 2 ± 0,15 | | | | |
| Braking circuit | 0,7 Litre version with front calipers Ø 48 / rear drums<br>0,8 Litre version with front calipers Ø 54 / rear discs | | | | |
| Cooling system | 7 | | | | 5,6 |
| Fuel tank capacity | 40 | | | | 45 |

**ESSENTIAL:** **Systematically check the oil level using the oil dipstick.**

| C3 | CAPACITIES (in litres) | | | | | | | | | | | | |
|---|---|---|---|---|---|---|---|---|---|---|---|---|---|
| | C3 | | | | | | | | | | | | |
| | Petrol | | | | | Diesel | | | | | | | |
| | 1.1i | 1.4i | | 1.4i 16V | 1.6i 16V | 1.4 HDi | | | | 1.4 HDI 16V | | | |
| | | | AUTO. | | | → RPO 9884 | | RPO 9885 → | | → RPO 9884 | | RPO 9885 → | |
| Engine type | HFX | KFV | | KFU | NFU | 8HX | 8HW | 8HX | 8HW | 8HV | 8HY | 8HV | 8HY |
| Drain by gravity : engine with filter change | 3 | | | 3,75 | 3,25 | 3,75 | | | | | | | |
| Bandween min. and max. | 1,5 | | | 1,2 | 1,5 | 1,8 | | 1,5 | | 1,8 | | 1,5 | |
| Drain by suction : engine with filter change | 3,1 | | | | 3,1 | | | | | | | | |
| Bandween min. and max. | 1,5 | | | | 1 | | | | | | | | |
| 5-speed gearbox | 2 | | | 2 | | | | | | 1,9 | | | |
| Automatic gearbox | | | (1) | | | | | | | | | | |
| After oil change | | | | | | | | | | | | | |
| Braking circuit | **0,7 Litre** version with front calipers **Ø 48 / rear drums**<br>**0,8 Litre** version with front calipers **Ø 54 / rear discs** | | | | | | | | | | | | |
| Cooling system | 7 | | | | 7 | 5,7 | | | | 5,6 | | | |
| Fuel tank capacity | 45 | | | | | | | | | | | | |

**ESSENTIAL: systematically check the oil level using the oil dipstick.**

**(1)** = The gearbox is **lubricated for life**. (For yorr information, the TOTAL capacity is **5,85 litres**, after draining: **3 litres**).

| CAPACITIES (in litres) | | | C3 PLURIEL |
|---|---|---|---|
| | C3 Pluriel | | |
| | Petrol | | Diesel |
| | 1.4i | 1.6i 16V | 1.4 HDi |
| Engine type | KFV | NFU | 8HX |
| Drain by gravity: engine with filter change | 3 | 3,25 | 3,75 |
| Bandween min. and max. | 1,5 | 1,5 | 1,5 |
| 5-speed gearbox | 2 | | |
| Braking circuit | **0,7 Litre** version with front calipers **Ø 48 / rear drums**<br>**0,8 Litre** version with front calipers **Ø 54 / rear discs** | | |
| Cooling system | 7 | | 5,7 |
| Fuel tank capacity | 45 | | |

**ESSENTIAL: systematically check the oil level using the oil dipstick.**

**(1)** = The gearbox is **lubricated for life**. (For yorr information, the TOTAL capacity is **5,85 litres**, after draining : **3 litre**s)

GENERAL

| XSARA II | CAPACITIES (in litres) | | | | | |
|---|---|---|---|---|---|---|
| | XSARA II | | | | | |
| | Petrol | | | | | |
| | 1.4i | 1.6i 16V | 1.6i 16V AUTO. | 2.0i 16V | 2.0i 16V AUTO. | |
| Engine type | KFW | NFU | | RFN | | RFS |
| Engine with filter element | 3 | 3,25 | | 4,25 | | |
| Bandween min. and max. | 1,5 | 1,5 | | 1,7 | | 1 |
| 5-speed gearbox | 2 | | | 1,9 | | 1,9 |
| Automatic gearbox | | | 6 | | 6 | |
| After drainage | | | 3 | | 3 | |
| Hydraulic or brake circuit | With ABS = 0,50 - Without ABS = 0,55 | | | | | |
| Cooling system | 7<br>6,5 **(1)** | | | | | |
| Fuel tank capacity | 54 | | | | | |

**ESSENTIAL: <u>Systematically check the oil level using the oil dipstick</u>.**

| IDENTIFICATION OF VEHICLES | | | | | | | XSARA II |
|---|---|---|---|---|---|---|---|
| | XSARA II | | | | | | |
| | Diesel | | | | | | |
| | 1.4 HDi | | 1.9 D | | 2.0 HDi | | |
| | → RPO 9884 | RPO 9885 → | | | | | AUTO. |
| Engine type | | 8HZ | WJY | | RHY | RHZ | |
| Engine with filter element | 3,75 | | 4,75 (1) | 4,5 (2) | 4,5 | | |
| Bandween min. and max. | 1,8 | 1,5 | 1,6 (1) | 1,2 (2) | 1,4 | | |
| 5-speed gearbox | 2 | | 1,8 | | | | |
| Automatic gearbox | | | | | | | 8,3 |
| After drainage | | | | | | | 5,3 |
| Hydraulic or brake circuit | With ABS = 0,50 - Without ABS = 0,55 | | | | | | |
| Cooling system | 5,7 | | 9 | | 8,5 | | |
| Fuel tank capacity | 54 | | | | | | |

**(1) = → RPO 9337** (Manual dipstick with two twists)
**(2) = RPO 9338 →** (Manual dipstick withort twists but with a sphere)
**ESSENTIAL: Systematically check the oil level using the oil dipstick.**

| XSARA PICASSO | CAPACITIES (in litres) | | | | | |
|---|---|---|---|---|---|---|
| | XSARA PICASSO | | | | | |
| | Petrol | | | Diesel | | |
| | 1.6i | 1.8i 16 V | 2.0i 16V AUTO. | 1.6 16V HDi | | 2.0 HDi |
| Engine type | NFV | 6FZ | RFN | 9HZ | 9HY | RHY |
| Engine with filter element | 3 | 4,25 | | 3,75 | | 4,5 |
| Bandween min. and max. | 1,5 | 1,7 | | 1,55 (3) | | 1,4 |
| 5-speed gearbox | 1,8 | | | | | 1,8 |
| Automatic gearbox | | | 6 | | | |
| After drainage | | | 3 | | | |
| Hydraulic or brake circuit | 0,58 litres | | | | | |
| Cooling system | 5,8 (1) and (2) | 6,5 (1) and (2) | | 11 | | 11 (1) and (2) |
| Fuel tank capacity | 55 | | | 60 | | |

**(1)** = With air conditioning
**(2)** = Withort air conditioning
**(3)** = **RPO 9884 ➔ = Restyled** XSARA PICASSO.

**ESSENTIAL:** **Systematically check the oil level using the oil dipstick.**

| CAPACITIES (in litres) | | | | | BERLINGO II |
|---|---|---|---|---|---|
| | Berlingo 2 | | | | |
| | Petrol | | | Diesel | |
| | Ecological oil filter capacity 0.15 litre. | | | | |
| | 1.1i | 1.4i | 1.6i 16V | 1.9 D | 2.0 HDi |
| Engine type | HFX | KFW | NFU | WJY | RHY |
| Moteur avec cartorche | 3 | | 3,25 | 4,5 | |
| Bandween min. and max. | 1,5 | | | 1,2 | 1,4 |
| 5-speed gearbox | 2 | | 1,8 | 1,8 | |
| Hydraulic or brake circuit | With ABS = 0,45 - Without ABS = 0,36 | | | | |
| Cooling system | 8 | | | 9 | |
| Fuel tank capacity | 55 | | | 60 | |

**ESSENTIAL:** **Systematically check the oil level using the oil dipstick.**

GENERAL

| ALL TYPES | LUBRICANTS - TOTAL recommended oils |
|---|---|

**Evolutions *(year 2004)*.**

**CITROËN C2, C3 PLURIEL, DISPATCH and DV6 engines.**

Only petrol versions are available.

Normal maintenance interval: **30 000 km *(20 000 miles).***
Severe maintenance interval: **20 000 km *(12 000 miles).***

**ESSENTIAL:** For all vehicles with a **30 000 km *(20 000 miles)*** maintenance interval, use exclusively **TOTAL ACTIVA/QUARTZ 7000** or **9000** or any other oils offering identical specifications to these.
These oils offer specifications that are superior to those defined by norms **ACEA A3 OR API SJ/CF**.
Failing this, it is essential to adhere to the maintenance programmes covering severe operating conditions.

**Use of oil grade 10W 40.**
It is possible to use semi-synthandic oil **7000 10W40** on **PETROL and DIESEL** vehicles.

**WARNING:** To avoid problems with starting from cold, use this oil as allowed by the climatic conditions in the corntry concerned *(see table)*.

For more dandails see the oil usage table.

**New commercial designation for energy economy oil.**
The oil **TOTAL ACTIVA/QUARTZ 9000 5W30** becomes
**TOTAL ACTIVA FUTUR 9000** *(for France)*,
**QUARTZ FUTURE 9000 5W30** *(outside France)*.
The usage exclusions for this oil are the same as before:

- **XSARA VTS 2.0i 16V** *(XU10J4RS)*
- **RELAY 2.8 TDi ; 2.8 HDi** *(SOFIM engine)*
- **HDi FAP** vehicles
- **C3 1.6i 16V** *(DV4TED4)*
- **C8 2.2i** *(EW12J4)*

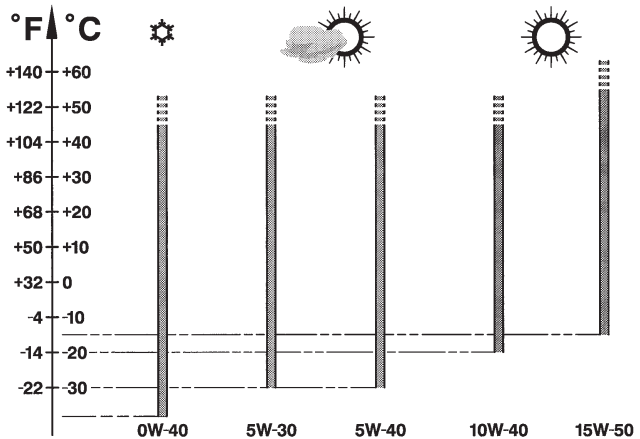


E4AP006D

**Engine oil norms.**

**Current norms.**

The classification of these engine oils is established by the following recognised organisations:

- **S.A.E** : Sociandy of Automotive Engineers.
- **API** : American Petroleum Institute.
- **ACEA** : Association des Constructeurs Européens d'Automobiles

**S.A.E. Norms - Table for selection of engine oil grade**

Selection of engine oil grades recommended for climatic conditions in corntries of distribution.

**Evolution of the norms as at 01/01/2003**

**ACEA 2003 norms**

The meaning of the first landter has not changed, it still corresponds to the type of engine:

**A:** petrol and dual **fuel petrol / LPG engines**.

**B: diesel** engines.

The figure following the first landter corresponds to the type of oil:

**3:** high performance oils.

**4:** oils specifically for direct injection diesel engines.

**5:** very high performance oils permitting lower fuel consumption.

**Example:**

**ACEA A3:** high performance oils specifically for petrol and dual fuel petrol / LPG engines.

**ACEA A/B:** blended oils giving very high performance for all engines, also permitting bandter fuel economy, specifically for direct injection diesel engines

**NOTE:** From **01/01/2003** there is no longer any reference to the year of creation of the norm *(example:* ***ACEA A3/B3 98*** *becomes* ***ACEA A3/B3).***

**API norms**

The meaning of the first landter has not changed, it still corresponds to the type of engine:

**S: petrol and dual fuel petrol / LPG** engines.

**C: diesel** engines.

The second landter corresponds to the degree of evolution of the oil *(ascending order)*.

**Example:** Norm **SL** is more severe than norm **SJ**, corresponding to a higher level of performance.

## LUBRICANTS - TOTAL recommended oils | ALL TYPES

**Recommendations.**

**ESSENTIAL: To preserve engine performances, all engines fitted in CITROEN vehicles must be lubricated with high quality oils *(synthandic or semi-synthandic).***

**CITROËN** engines are lubricated at the factory with **TOTAL** oil of grade **S.A.E.5W-30**.
**TOTAL** oil of grade **S.A.E.5W-30** allows improved fuel economies *(approx 2.5%)*.

The oil **5W30** is used only for the following engines *(Year 2003)*:

- **XU10 J4RS** : XSARA VTS 2.0i 16V *(3-door)*
- **SOFIM** : RELAY 2.8 TDi and 2.8 HDi.
- **HDi** : With particle filter *(FAP)*.
- **DV4 TED4** : CITROËN C3 1.4 HDi 16V
- **EW 12J4** : CITROËN C8 2.2i.

**WARNING: CITROËN** engines prior to model **year 2000** do not have to be lubricated with oils adhering to the norms **ACEA AI-98 and API SJ/CF EC** or current norms **ACEA A5/B5**

Denomination of **TOTAL** oils according to corntry of markanding:
**TOTAL ACTIVA** *(France only)*.
**TOTAL QUARTZ** *(outside France)*.

| ALL TYPES | LUBRICANTS - TOTAL recommended oils |
|---|---|

**Récapitulation**

| Norms to be observed for engine oils (year 2003) | | | |
|---|---|---|---|
| **Year** | **Types of engine concerned** | **ACEA norms** | **API norms** |
| **Year 2003** | Petrol and dual fuel petrol / LPG engines | **A3 or A5 5 (*)** | **SJ or SL** |
| | Diesel engines | **B3 or B5 (*)** | **CF** |

**(*) It is essential not to use engine oils respecting these norms for the following engine-types: XU10 J4RS , SOFIM 2.8 TDi and SOFIM 2.8 HDi , HDi with particle filter (FAP), EW 12 J4, DV4 TED4.**

**Classes and grades of TOTAL recommended engine oils.**
Oils markanded in each country are adapted to the local climatic conditions.

| Blended oils for all engines (petrol, diesel and dual fuel petrol / LPG engines). | | | |
|---|---|---|---|
| | **S.A.E. norms** | **ACEA norms** | **API norms** |
| **TOTAL ACTIVA 9000**<br>**TOTAL QUARTZ 9000** | **5W40** | **A3 / B3** | **SL / CF** |
| **TOTAL ACTIVA FUTUR 9000 (*)** | **5W30** | **A5 / B5** | |
| **TOTAL QUARTZ FUTUR 9000 (*)** | | | |
| **TOTAL ACTIVATRAC** | **10W40** | **A3 / B3** | **SJ / CF** |

**(*) Blended oils for all engines, permitting fuel economy.**

| Oils specifically for petrol and dual fuel petrol / LPG engines | | | |
|---|---|---|---|
| | S.A.E. norms | ACEA norms | API norms |
| TOTAL ACTIVA 7000<br>TOTAL QUARTZ 7000 | 10W40 | A3 | SJ |
| TOTAL QUARTZ 9000 | 0W40 | | |
| TOTAL ACTIVA 7000<br>TOTAL QUARTZ 7000 | 15W50 | | |

| Oils specifically for diesel engines | | | |
|---|---|---|---|
| | S.A.E. norms | ACEA norms | API norms |
| TOTAL ACTIVA DIESEL 7000<br>TOTAL QUARTZ DIESEL 7000 | 10W40 | B3 | CF |
| TOTAL ACTIVA DIESEL 7000 | 15W50 | | |

| ALL TYPES | LUBRICANTS - TOTAL recommended oils |
|---|---|

**Oil usage table**

| Engine types | | TOTAL ACTIVA QUARTZ | | | | |
|---|---|---|---|---|---|---|
| | | Synthetic 9000 | | | Semi-synthetic 7000 | |
| | | 0W40 cold contries | 5W30 | 5W40 | 10W40 | 15W50 hot countries |
| Petrol engines | XU10 J4RS (Xsara VTS 2.0i 16V) | X | | X | X | X |
| | EW 12 J4 (C8 2.2i 16V) | X | | X | X | X |
| | Other petrol engines | X | X | X | X | X |
| Diesel engines | HDi engines with FAP (*) | | | X | X | X |
| | Other HDi engines | | X | X | X | X |
| | SOFIM 2.8 TDi and 2.8 HDi (RELAY) | | | X | X | X |
| | DV4 TED4 (C3 1.4 16V HDi) | | | X | X | X |
| | Indirect injection diesel engines | | X | X | X | X |

**(*) = Particle filter**

| LUBRICANTS - TOTAL recommended oils | ALL TYPES |
|---|---|

**Selection of TOTAL engine oils, to be used according to the climatic conditions in the country where the vehicle is marketed.**

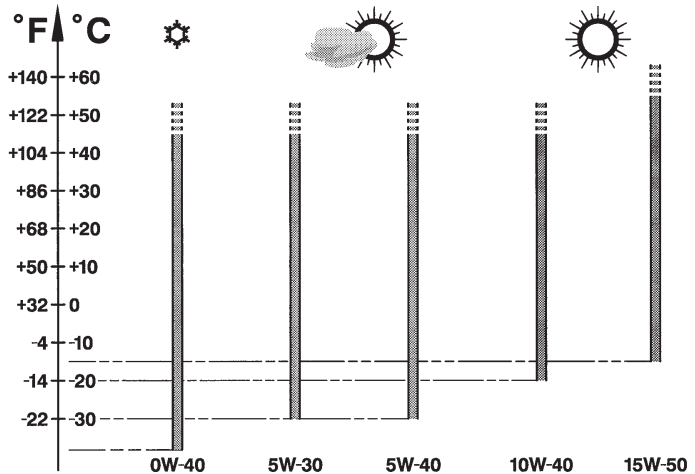


E4AP006D

| ALL TYPES | LUBRICANTS - TOTAL recommended oils | | |
|---|---|---|---|
| FRANCE | ENGINE OILS | | |
| | Blended oils for all engines, supplied in bulk | | |
| Metropolitan FRANCE | TOTAL ACTIVRAC | S.A.E. norms : 10W40 | |
| | TOTAL ACTIVA | | TOTAL ACTIVA DIESEL |
| | Blended oils for all engines | Oils specifically for petrol and dual-fuel petrol / LPG engines | Oils specifically for diesel engines |
| Metropolitan FRANCE | 9000 5W40<br>9000 5W30 (*) | 7000 10 W40 | 7000 10 W40<br>9000 5W40 |
| New Caledonia<br>Guadeloupe<br>Saint martin<br>Réunion<br>Martinique<br>Guyana<br>Tahiti<br>Mauritius<br>Mayotte | 9000 5W40 | 7000 15W50 | 7000 15W50 |
| (*) Blended oils for all engines, permitting fuel economy | | | |

| LUBRICANTS - TOTAL recommended oils | | | ALL TYPES |
|---|---|---|---|
| EUROPE | ENGINE OILS | | |
| | TOTAL ACTIVA | | TOTAL ACTIVA DIESEL |
| | Blended oils for all engines | Oils specifically for petrol and dual-fuel petrol / LPG engines | Oils specifically for diesel engines |
| Germany | 9000 5W40<br>FUTURE 9000 5W30 (*) | 7000 10W40<br>9000 0W40 | 7000 10W40 |
| Austria | | 7000 10W40 | |
| Belgium | | 7000 10W40<br>9000 0W40 | |
| Bosnia | | 7000 10W40<br>9000 0W40 | |
| Bulgaria | | 7000 10W40 | |
| Cyprus | | 7000 10W40<br>9000 15W40 | |
| Croatia | | 7000 10W40 | |
| (*) Blended oils for all engines, permitting fuel economy | | | |

GENERAL

| ALL TYPES | LUBRICANTS - TOTAL recommended oils | | |
|---|---|---|---|
| | ENGINE OILS | | |
| EUROPE | TOTAL ACTIVA | | TOTAL ACTIVA DIESEL |
| | Blended oils for all engines | Oils specifically for petrol and dual-fuel petrol / LPG engines | Oils specifically for diesel engines |
| Denmark | 9000 5W40<br>FUTURE 9000 5W30 (*) | 7000 10W40<br>9000 0W40 | 7000 10W40 |
| Spain | | 7000 10W40<br>7000 15W40 | |
| Estonia | | 7000 10W40<br>9000 0W40 | |
| Finland | | | |
| Great Britain | | 7000 10W40 | |
| Greece | | 7000 10W40<br>7000 15W40 | |
| Holland | | 7000 10W40<br>9000 0W40 | |

**(*) Blended oils for all engines, permitting fuel economy**

| LUBRICANTS - TOTAL recommended oils | | | ALL TYPES |
|---|---|---|---|
| EUROPE | ENGINE OILS | | |
| | TOTAL ACTIVA | | TOTAL ACTIVA DIESEL |
| | Blended oils for all engines | Oils specifically for petrol and dual-fuel petrol / LPG engines | Oils specifically for diesel engines |
| Hungary | 9000 5W40<br>FUTURE 9000 5W30 (*) | 7000 10W40<br>9000 0W40 | 7000 10W40 |
| Italy | | 7000 10W40 | |
| Ireland | | | |
| Iceland | | | |
| Latvia | | 7000 10W40<br>9000 0W40 | |
| Lithuania | | | |
| Macedonia | | 7000 10W40 | |
| (*) Blended oils for all engines, permitting fuel economy | | | |

GENERAL

| ALL TYPES | LUBRICANTS - TOTAL recommended oils | | |
|---|---|---|---|
| EUROPE | ENGINE OILS | | |
| | TOTAL ACTIVA | | TOTAL ACTIVA DIESEL |
| | Blended oils for all engines | Oils specifically for petrol and dual-fuel petrol / LPG engines | Oils specifically for diesel engines |
| Malta | 9000 5W40<br>FUTURE 9000 5W30 (*) | 7000 10W40<br>7000 15W50 | 7000 10W40 |
| Moldavia | | 7000 10W40 | |
| Norway | | 7000 10W40<br>9000 0W40 | |
| Poland | | 7000 10W40 | |
| Portugal | | | |
| Slovakia | | | |
| Czech Republic | | 7000 10W40<br>9000 0W40 | |

**(*) Blended oils for all engines, permitting fuel economy**

| LUBRICANTS - TOTAL recommended oils | | | ALL TYPES |
|---|---|---|---|
| EUROPE | ENGINE OILS | | |
| | TOTAL ACTIVA | | TOTAL ACTIVA DIESEL |
| | Blended oils for all engines | Oils specifically for petrol and dual-fuel petrol / LPG engines | Oils specifically for diesel engines |
| Romania | 9000 5W40<br>FUTURE 9000 5W30 (*) | 7000 10W40<br>7000 15W50<br>9000 0W40 | 7000 10W40 |
| Russia | | 7000 10W40<br>9000 0W40 | |
| Slovenia | | | |
| Sweden | | | |
| Switzerland | | 7000 10W40 | |
| Turkey | | 7000 10W40<br>9000 15W50<br>9000 0W40 | |
| (*) Blended oils for all engines, permitting fuel economy | | | |

GENERAL

| ALL TYPES | LUBRICANTS - TOTAL recommended oils | | |
|---|---|---|---|
| | ENGINE OILS | | |
| EUROPE | TOTAL ACTIVA | | TOTAL ACTIVA DIESEL |
| | Blended oils for all engines | Oils specifically for petrol and dual-fuel petrol / LPG engines | Oils specifically for diesel engines |
| Ukraine<br>Yugoslavia | 9000 5W40<br>FUTURE 9000 5W30 (*) | 7000 10W40<br>9000 0W40 | 7000 10W40 |

(*) Blended oils for all engines, permitting fuel economy

| LUBRICANTS - TOTAL recommended oils | | | ALL TYPES |
|---|---|---|---|
| **OCEANIA** | **ENGINE OILS** | | |
| | **TOTAL ACTIVA** | | **TOTAL ACTIVA DIESEL** |
| | **Blended oils for all engines** | **Oils specifically for petrol and dual-fuel petrol / LPG engines** | **Oils specifically for diesel engines** |
| Australia<br>New Zealand | **9000 5W40<br>FUTURE 9000 5W30** | **7000 10W40** | **7000 10W40** |
| **AFRICA** | **TOTAL ACTIVA** | | **TOTAL ACTIVA DIESEL** |
| | **Blended oils for all engines** | **Oils specifically for petrol and dual-fuel petrol / LPG engines** | **Oils specifically for diesel engines** |
| Algeria, South Africa, Ivory Coast, Egypt, Gabon, Ghana, Kenya, Madagascar, Morocco, Nigeria, Senegal, Tunisia | **9000 5W40** | **7000 15W50** | **7000 10W40** |

| ALL TYPES | LUBRICANTS - TOTAL recommended oils | | |
|---|---|---|---|
| CENTRAL AND SOUTH AMERICA | ENGINE OILS | | |
| | TOTAL ACTIVA | | TOTAL ACTIVA DIESEL |
| | Blended oils for all engines | Oils specifically for petrol and dual-fuel petrol / LPG engines | Oils specifically for diesel engines |
| Argentina | 9000 5W40 | 7000 10W50<br>7000 15W50 | 7000 10W40 |
| Brazil | | | |
| Chile | | | |
| Cuba | | | |
| Mexico | | | |
| Paraguay | | | |
| Uruguay | | | |

| LUBRICANTS - TOTAL recommended oils | | | ALL TYPES |
|---|---|---|---|
| SOUTH-EAST ASIA | ENGINE OILS | | |
| | TOTAL ACTIVA | | TOTAL ACTIVA DIESEL |
| | Blended oils for all engines | Oils specifically for petrol and dual-fuel petrol / LPG engines | Oils specifically for diesel engines |
| China | 9000 5W40<br>FUTURE 9000 5W30 | 7000 10W50<br>7000 15W50 | 7000 10W40 |
| South Korea | | 7000 10W40 | |
| Hong Kong | | 7000 15W50 | |
| India - Indonesia | 9000 5W40 | | |
| Japan | 9000 5W40<br>FUTURE 9000 5W30 (*) | 7000 10W40<br>7000 15W50 | |
| Malaysia | 9000 5W40 | 7000 15W50 | |
| Pakistan | | | |
| (*) Blended oils for all engines, permitting fuel economy | | | |

GENERAL

| ALL TYPES | LUBRICANTS - TOTAL recommended oils | | |
|---|---|---|---|
| SOUTH-EAST ASIA | ENGINE OILS | | |
| | TOTAL ACTIVA | | TOTAL ACTIVA DIESEL |
| | Blended oils for all engines | Oils specifically for petrol and dual-fuel petrol / LPG engines | Oils specifically for diesel engines |
| Philippines | 9000 5W40 | 7000 15W50 | 7000 10W40 |
| Singapore | | | |
| Taiwan | | 7000 10W40<br>7000 15W50 | |
| Thailand | | 7000 15W50 | |
| Vietnam | | | |

| LUBRICANTS - TOTAL recommended oils | | | ALL TYPES |
|---|---|---|---|
| MIDDLE EAST | ENGINE OILS | | |
| | TOTAL ACTIVA | | TOTAL ACTIVA DIESEL |
| | Blended oils for all engines | Oils specifically for petrol and dual-fuel petrol / LPG engines | Oils specifically for diesel engines |
| Saudi Arabia - Bahrain<br>Dubai<br>United Arab Emirates | 9000 5W40 | 7000 15W50 | 7000 10W40 |
| Iran | | 7000 10W40<br>7000 15W50 | |
| Israel - Jordan - Kuwait<br>Lebanon - Oman - Qatar - Syria - Yemen | | 7000 15W50 | |

| ALL TYPES | LUBRICANTS - TOTAL recommended oils |
|---|---|

## GEARBOX OILS

| | | |
|---|---|---|
| Manual gearbox and SensoDrive | All countries | TOTAL TRANSMISSION BV<br>norms S.A.E.: 75W80<br>**Part No.: 9730 A2.** |
| MB3 automatic gearbox | | TOTAL FLUIDE ATX |
| | | TOTAL FLUIDE AT 42<br>Special oil distributed by CITROËN<br>**Part No.: 9730 A3** |
| 4HP20 and AL4 autoactive automatic gearboxes | | Special oil distributed by CITROËN<br>**Part No.: 9736 22** |
| Transfer box and rear axle | | TOTAL TRANSMISSION X4<br>**Part No.: 9730 A4** |

## POWER STEERING OILS

| | | |
|---|---|---|
| Power steering | All countries | TOTAL FLUIDE ATX |
| | Very cold countries | TOTAL FLUIDE DAS<br>Special oil distributed by CITROËN<br>**Part No.: 9730 A1** |

## ENGINE COOLANT FLUID

| | | Pack | CITROËN Part No. | |
|---|---|---|---|---|
| | | | GLYSANTIN G33 | REVKOGEL 2000 |
| All countries | CITROËN fluid<br>Protection: - 35C° | **2** Litres | **9979 70** | **9979 72** |
| | | **5** Litres | **9979 71** | **9979 73** |
| | | **20** Litres | **9979 76** | **9979 74** |
| | | **210** Litres | **9979 77** | **9979 75** |

| ALL TYPES | LUBRICANTS - TOTAL recommended oils |
|---|---|

**BRAKE FLUIDS**
**Synthetic brake fluid**

| | | Pack | CITROËN Part No. |
|---|---|---|---|
| All countries | CITROËN fluid | **0,5** Litre | **9979 05** |
| | | **1** Litre | **9979 06** |
| | | **5** Litres | **9979 07** |

**HYDRAULIC CIRCUIT**

| All countries | Norm | | Pack | CITROËN Part No. |
|---|---|---|---|---|
| **TOTAL FLUIDE LDS** | Colour | **Orange** | **1** Litre | **9979 69** |
| **TOTAL LHM PLUS** | | **Green** | | **ZCP 830095** |
| **TOTAL LHM PLUS Very cold countries** | | | | **9979 20** |

**WARNING: TOTAL FLUIDE LDS fluid cannot be blended with TOTAL LHM.**

**WARNING: CITROËN C5: Use exclusively TOTAL FLUIDE LDS suspension fluid.**

| | |
|---|---|
| All countries | **TOTAL HYDRAURINCAGE** |

## SCREEN WASH FLUID

| | Pack | | CITROËN Part No. | | |
|---|---|---|---|---|---|
| All countries | Concentrated: **250** ml | | **9980 33** | **ZC 9875 953U** | **9980 56** |
| | Fluid ready for use | **1** Litre | **9980 06** | **ZC 9875 784U** | |
| | | **5** Litres | **9980 05** | **ZC 9885 077U** | **ZC 9875 279U** |

## GREASE
### General use

| | | Norms NLGI |
|---|---|---|
| All countries | **TOTAL MULTIS 2** | **2** |
| | **TOTAL SMALL MECHANISMS** | |

Note: NLGI = National Lubricating Grease Institute.

| ALL TYPES | ENGINE OIL CONSUMPTION |
|---|---|

I - Oil consumption depends on:

- the engine type.
- how run-in or worn it is.
- the type of oil used.
- the driving conditions.

II - An engine can be considered **RUN-IN** after:

- **3,000 miles *(5,000 km)*** for a **PETROL** engine.
- **6,000 miles *(10,000 km)*** for a **DIESEL** engine.

III - **MAXIMUM PERMISSIBLE** oil consumption for a **RUN-IN** engine:

**- 0.5 litres** per **600 miles *(1,000 km)*** for a **PETROL** engine.
**- 1 litre** per **600 miles *(1,000 km)*** for a **DIESEL** engine.
**DO NOT INTERVENE BELOW THESE VALUES.**

IV - **OIL LEVEL:** The level should **NEVER be above the MAX. mark** on the dipstick after changing or topping up the oil.

- This excess oil will be used up rapidly.
- It will reduce the engine output and adversely affect the operation of the air circuits and gas recycling

## ENGINE SPECIFICATIONS

| | Engines: HFX - KFV - KFW - KFU | | | | | |
|---|---|---|---|---|---|---|
| | Petrol | | | | | |
| | All types | | | | | |
| | 1.1i | | 1.4i | | 1.4i 16V | |
| **Vehicle** | **C2/C3** | **BERLINGO II** | **C2/C3/C3 Pluriel** | **Xsara II/Berlingo II** | **C3** | |
| **Emission standard** | **L4/IFL5** | **L4/W4** | **L4/IFL5/INF** | **K'/L4/W4/IFL5** | **IFL5/L4** | |
| **Engine type** | **HFX** | | **KFV** | **KFW** | **KFU** | |
| **Cubic capacity (cc)** | 1124 | | 1360 | | | |
| **Bore / Stroke** | 72/69 | | 75/77 | | | |
| **Compression ratio** | 10,5/1 | | | | 11/1 | |
| **Power ISO or EEC KW - rpm** | 44-5500 | 44,1-5500 | 54-5400 | 55-5500 | 65-5250 | |
| **Power DIN (HP - rpm)** | 61-5500 | 60-5500 | 75-5400 | 75-5500 | 90-5250 | |
| **Torque ISO or EEC (m.daN - rpm)** | 94-3400 | 94-3300<br>94-3500 | 12-3400 | 12-2800 | 13,3-3250 | |

## ENGINE SPECIFICATIONS

| | Engines: NFV - NFU - 6FZ - RFN - RFS | | | | |
|---|---|---|---|---|---|
| | Petrol | | | | |
| | All types | | | | |
| | 1.6i | 1.6i 16V | 1.8i 16V | 2.0i 16V | |
| Vehicle | Xsara Picasso | C2/C3 Xsara<br>C3 Pluriel<br>Berlingo II | Xsara Picasso | Xsara II<br>Xsara Picasso | Xsara II |
| Emission standard | L4 | L4/IFL5 | IFL5 | IFL4/IFL5 | L4 |
| Engine type | NFV | NFU | 6FZ | RFN | RFS |
| Cubic capacity (cc) | 1587 | | 1749 | 1998 | |
| Bore / Stroke | 78,5/82 | 78/82 | 82,7/81,4 | 85/86 | |
| Compression ratio | 10,5/1 | 11/1 | 10,8/1 | 10,8/1 | |
| Power ISO or EEC KW - rpm | 70-5700 | 80-5800 | 85-5500 | 100-6000 | 120-6000 |
| Power DIN (HP - rpm) | 95-5700 | 110-5800 | 115-5500 | 136-6000 | 163-6000 |
| Torque ISO or EEC (m.daN - rpm) | 13,5-3000 | 14,7-4000 | 16-4000 | 19-4100 | 19,3-5000 |

| ENGINE SPECIFICATIONS | | | | | | |
|---|---|---|---|---|---|---|
| | Engines: 8HX - 8HW - 8HZ - 8HV - 8HY | | | | | |
| | Diesel | | | | | |
| | All types | | | | | |
| | 1.4 HDi | | | 1.4 HDi 16V | | |
| **Vehicle** | **C2/C3/C3 Pluriel** | **C3** | **Xsara** | **C3** | | |
| **Emission standard** | **L4/IFL5** | **L4** | | | | |
| **Engine type** | **8HX** | **8HW** | **8HZ** | **8HV** | **8HY** | |
| **Cubic capacity (cc)** | 1398 | | | | | |
| **Bore / Stroke** | 73/82 | | 73,5/82 | 73/82 | | |
| **Compression ratio** | 17,9/1 | | | 18,25/1 | | |
| **Power ISO or EEC KW - rpm** | 50-4000 | | | 66-4000 | | |
| **Power DIN (HP - rpm)** | 70-4000 | | 69-4000 | 92-4000 | | |
| **Torque ISO or EEC (m.daN - rpm)** | 15-2000 | | 16-2000 | 20-2000 | | |

## ENGINE SPECIFICATIONS

| | Engines: 9HZ - 9HY - WJY - RHU - RHZ | | | | | |
|---|---|---|---|---|---|---|
| | Diesel | | | | | |
| | All types | | | | | |
| | 1.6 HDi 16V | | 1.9 D | | 2.0 HDi | |
| **Vehicle** | Xsara Picasso | | Xsara II | Berlingo II | Xsara II<br>Xsara Picasso<br>Berlingo II | Xsara II |
| **Emission standard** | L4 | | | | | |
| **Engine type** | 9HZ | 9HY | WJY | | RHY | RHZ |
| **Cubic capacity (cc)** | 1560 | | 1868 | | 1997 | |
| **Bore / Stroke** | 88,3/75 | | 82,2/88 | | 85/88 | |
| **Compression ratio** | 18/1 | | 23/1 | | 17,6/1 | |
| **Power ISO or EEC KW - rpm** | 80-4000 | | 51-4600 | | 66-4000 | 80-4000 |
| **Power DIN (HP - rpm)** | 110-4000 | | 71-4600 | | 90-4000 | 109-4000 |
| **Torque ISO or EEC (m.daN - rpm)** | 24,5-2000 | | 12,5-2500 | 10,5-2500 | 20,5-1900 | 25-1750 |
| | | | | | | |

# SPECIAL FEATURES - TIGHTENING TORQUES (m.daN )

C2

## Engines: HFX - KFV - NFU

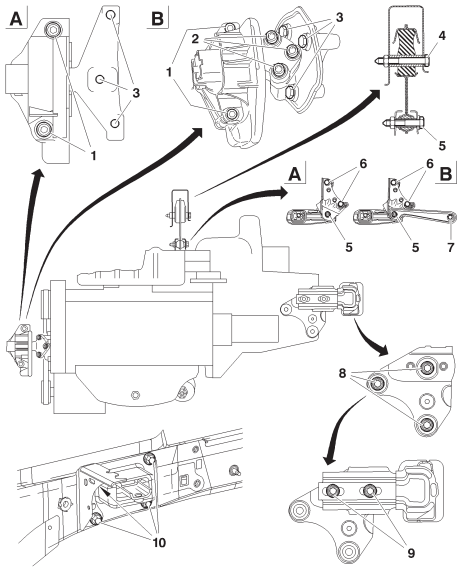


B1BP2Y3P

A = KFV
B = NFU

**RH engine support**

| | |
|---|---|
| (1) | : 6 ± 0,4 |
| (2) | : 6 ± 0,6 |
| (3) | : 4,5 ± 0,4 |

**Torque reaction rod**

| | |
|---|---|
| (4) | : 6 ± 0,6 |
| (5) | : 6 ± 0,6 |
| (6) | : 8,5 ± 0,2 |
| (7) | : 6 ± 0,6 |

**LH engine support on gearbox**

| | |
|---|---|
| (8) | : 3 ± 0,3 |
| (9) | : 6 ± 0,6 |
| (10) | : 5,5 ± 0,5 |

| C2 | SPECIAL FEATURES - TIGHTENING TORQUES (m.daN ) |
|---|---|
| **Engines** | **HFX - KFV - NFU** |
| | **Crankshaft** |
| Accessories drive pulley | **2,5 ± 0,2** |
| **Pinion fixing on crankshaft** | |
| - Tightening | **4 ± 0,4** |
| - Angular tightening | **45° ± 4°** |
| | **Cylinder block** |
| Sump | **0,8 ± 0,2** |
| Timing belt tensioner roller | **2,1 ± 0,2** |
| Accessories belt guide roller | **2,5 ± 0,2** |
| Alternator support | **2,5 ± 0,2** |
| Alternator TU1JP-TU3JP | |
| - Pre-tightening | **1 ±** |
| - Tightening | **3,7 ± 0,3** |
| Alternator TU5JP4 | |
| - Pre-tightening | **1 ±** |
| - Tightening | **4 ± ,04** |
| Aircon compressor support | **2,2 ± 0,2** |
| Aircon compressor | **2,3 ± 0,2** |
| | |

| SPECIAL FEATURES - TIGHTENING TORQUES (m.daN ) | C2 |
|---|---|
| **Engines** | **HFX - KFV - NFU** |
| | **Cylinder head** |
| Coolant outlet housing | |
| - in plastic | **0,8 ± 0,2** |
| - in aluminium | **0,8 ± 0,2** |
| Camshaft bearing caps (TU1JP-TU3JP) | |
| - Tightening | **2 ± 0,2** |
| - Angular tightening | **44 °± 4°** |
| Camshaft bearing caps (TU5JP4) | |
| - Tightening | **2 ± 0,2** |
| - Angular tightening | **50° ± 5°** |
| Inlet manifold | **0,8 ± 0,2** |
| Exhaust manifold | **1,8 ± 0,4** |
| Valve rockers adjusting screw | **1,75 ± 0,25** |
| Sparking plugs | **3** |
| Camshaft pulley screw (TU1JP-TU3JP) | **3,7 ± 0,2** |
| Camshaft pulley screw (TU5JP4) | **4,5 ± 0,5** |
| | |

| C2 | SPECIAL FEATURES - TIGHTENING TORQUES (m.daN ) |
|---|---|
| **Engines** | **HFX - KFV - NFU** |
| | **Flywheel - clutch** |
| Engine flywheel | **6,7 ± 1 (LOCTITE FRENETANCH)** |
| Oil pressure mechanism | **2 ± 0,2** |
| | **Lubrication Circuit** |
| Oil pressure switch | **3,5 ± 0,5** |
| Oil pump | **0,9 ± 0,1** |
| | **Cooling circuit** |
| Coolant pump | **1,6 ± 0,2** |

# SPECIAL FEATURES - TIGHTENING TORQUES (m.daN )

C2

## Engine: 8HX

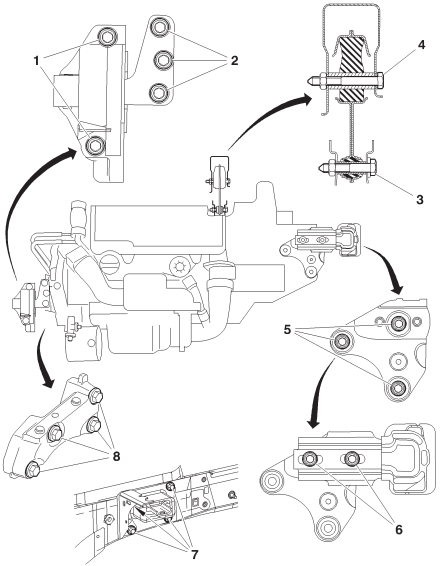


B1BP2Y1P

(1) : 6 ± 0,6

(2) : 6 ± 0,6

(3) : 6 ± 0,6

(4) : 6 ± 0,6

(5) : 3 ± 0,3

(6) : 6 ± 0,6

(7) : 5,5± 0,5

(8) : 5,7 ± 0,9

| C2 | SPECIAL FEATURES - TIGHTENING TORQUES (m.daN ) |
|---|---|
| **Engine** | **8HX** |
| | **Crankshaft** |
| Bearing cap fixing screws | |
| Pre-tightening | **1 ± 0,2** |
| Slackening | **180°** |
| Tightening | **3 ± 0,3** |
| Angular tightening | **140°** |
| Con rod screws | |
| Tightening | **1 ± 0,1** |
| Angular tightening | **100° ± 5°** |
| Accessories drive pulley | |
| Pre-tightening | **3 ± 0,3** |
| Angular tightening | **180° ± 5°** |
| | **Cylinder block** |
| Sump | **1,3 ± 0,1** |
| Timing belt guide roller | **2,3 ± 0,2** |
| Timing belt tensioner roller | **3,7 ± 0,3** |
| | |

| SPECIAL FEATURES - TIGHTENING TORQUES (m.daN ) | C2 |
|---|---|
| **Engine** | **8HX** |
| | **Cylinder head** |
| Camshaft bearing covers | |
| Pre-tightening | **0,3 ± 0,1** |
| Tightening | **1 ± 0,1** |
| Fixing of camshaft sub-assemblies on cylinder head | |
| Pre-tightening | **0,3 ± 0,1** |
| Tightening | **1 ± 0,1** |
| Exhaust manifold | **3 ± 0,3** |
| Camshaft pulley | |
| Pre-tightening | **0,3 ± 0,1** |
| Tightening | **4,3 ± 0,4** |
| | **Engine flywheel** |
| Flywheel | |
| Pre-tightening | **1,7 ± 0,2** |
| Tightening | **70° ± 5°** |
| Clutch mechanism | **2 ± 0,2** |
| | |

| C2 | SPECIAL FEATURES - TIGHTENING TORQUES (m.daN ) |
|---|---|
| **Engine** | **8HX** |
| | **Lubrication circuit** |
| Oil pump assembly | |
| Pre-tightening | **0,5 ± 0,1** |
| Tightening | **0,9 ± 0,1** |
| Coolant/oil heat exchanger | **1 ± 0,1** |
| | **Diesel injection circuit** |
| Spherical-base screws for diesel injection fixing fork | **2,5 ± 0,2** |
| Fuel high pressure common injection rail on engine block | **2,2 ± 0,2** |
| Unions on fuel high pressure common injection rail | **2,5 ± 0,2** |
| Diesel injection pump on support | **2,2 ± 0,2** |
| Union on diesel injection | **2,5 ± 0,2** |
| Diesel injection pump pulley | **5 ± 0,5** |
| Union on diesel high pressure pump | **2,5 ± 0,2** |
| | **Cooling circuit** |
| Coolant pump | |
| Pre-tightening | **0,3 ± 0,1** |
| Tightening | **0,9 ± 0,1** |
| Coolant outlet housing | |
| Pre-tightening | **0,3 ± 0,1** |
| Tightening | **0,7 ± 0,1** |

# SPECIAL FEATURES - TIGHTENING TORQUES (m.daN )

## C3 - C3 PLURIEL

### Engines: HFX - KFV - NFU

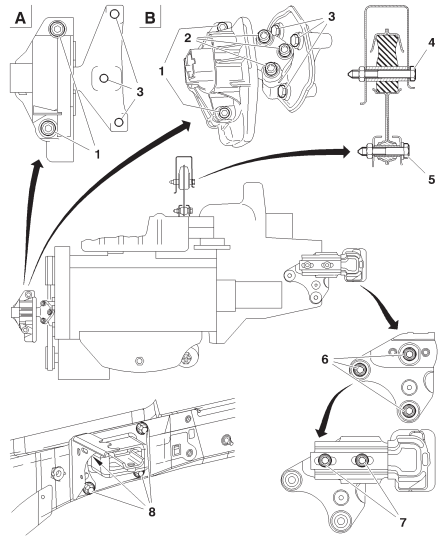


B1BP2NEP

**C3**

**A = HFX - KFV**
**B = NFU**

**RH engine support**
**(1) : 4,5 ± 0,4**
**(2) : 6,1 ± 0,6**
**(3) : 4,5 ± 0,4**

**Torque reaction rod**
**(4) : 6 ± 0,6**
**(5) : 6 ± 0,6**

**LH engine support on gearbox**
**(6) : 3 ± 0,3**
**(7) : 6 ± 0,6**
**(8) : 5,5 ± 0,5**

**C3 Pluriel**

**A = KFV**
**B = NFU**

**RH engine support**
**(1) : 6 ± 0,4**
**(2) : 6 ± 0,6**
**(3) : 4,5 ± 0,4**

**Torque reaction rod**
**(4) : 6 ± 0,6**
**(5) : 6 ± 0,6**

**LH engine support on gearbox**
**(6) : 3 ± 0,3**
**(7) : 6 ± 0,6**
**(8) : 5,5 ± 0,5**

| C3 | SPECIAL FEATURES - TIGHTENING TORQUES (m.daN ) | | |
|---|---|---|---|
| | Crankshaft | | |
| **Engine types** | **HFX** | **KFV** | **NFU** |
| Accessories drive pulley | 0,8 ± 0,2 | | |
| Pinion fixing on crankshaft | 10 ± 1 | | 2,5 ± 0,2 |
| | Cylinder block | | |
| Sump | 0,8 ± 0,2 | | |
| Timing belt tensioner roller | 2 ± 0,2 | | 2,2 ± 0,2 |
| Accessories belt tensioner roller | 2 ± 0,2 | | 2,5 ± 0,2 |
| Alternator support fixing | 1,7 ± 0,3 | | |
| Alternator fixing on support | 3,7 ± 0,3 | | |
| | Cylinder head | | |
| Coolant outlet housing | 0,8 ± 0,2 | | |
| Camshaft bearing cap | | | |
| Tightening | 2 ± 0,2 | | 2 ± 0,2 |
| Angular tightening | 44° ± 4° | | 50° ± 5° |
| Inlet manifold | 0,8 ± 0,2 | | |
| Exhaust manifold | 1,7 ± 0,3 | | 2 ± 0,2 |
| Valve rockers adjusting screw | 1,75 ± 0,25 | | |
| Sparking plugs | 2,75 ± 0,25 | | |
| Camshaft pulley screw | 8 ± 0,8 | | |

| SPECIAL FEATURES - TIGHTENING TORQUES (m.daN ) | | | C3 |
|---|---|---|---|
| | Flywheel - Clutch | | |
| **Engines** | **HFX** | **KFV** | **NFU** |
| Flywheel | 6,7 ± 0,6 + LOCTITE FRENETANCH | | |
| Clutch mechanism | 2 ± 0,2 | | |
| | Lubrication circuit | | |
| Oil pressure switch | 2 ± 0,2 | | |
| Oil pump | 0,9 ± 0,1 | | |
| | Cooling circuit | | |
| Coolant pump | 1,4 ± 0,1 | | |
| Coolant outlet housing | 0,8 ± 0,1 | | |

| C3 | TIGHTENING TORQUES: POWER UNIT SUSPENSION |
|---|---|

**Engine: KFU**

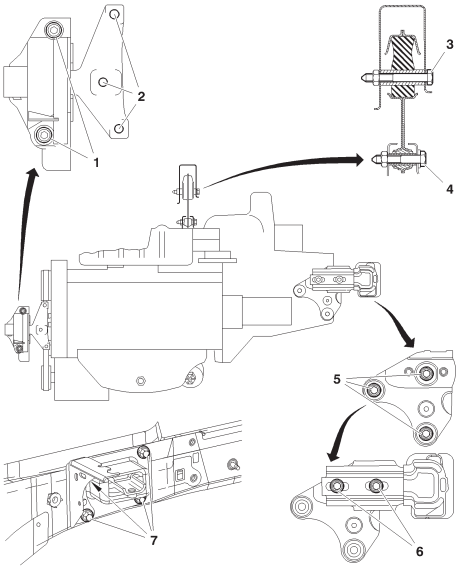


B1BP2ZBP

**RH engine support**

**(1) : 6 ± 0,6**
**(2) : 6 ± 0,6**

**Torque reaction rod**

**(3) : 6 ± 0,6**
**(4) : 6 ± 0,6**

**LH engine support on gearbox**

**(5) : 3 ± 0,3**
**(6) : 6 ± 0,6**
**(7) : 5,5 ± 0,5**

| SPECIAL FEATURES - TIGHTENING TORQUES (m.daN ) | C3 |
|---|---|
| **Engine** | **KFU** |
| | **Crankshaft** |
| Accessories drive pulley | **0,8 ± 0,2** |
| Pinion fixing on crankshaft<br>- Pre-tightening<br>- Angular tightening | <br>**4 ± 0,4**<br>**45 ± 4°** |
| | **Cylinder block** |
| Sump | **0,8 ± 0,2** |
| Accessories belt guide roller | **4 ± 0,4** |
| Timing belt tensioner roller | **2,1 ± 0,2** |
| Accessories belt tensioner roller | **2,5 ± 0,2** |
| Alternator support | **2,5 ± 0,3** |
| Crankshaft bearing caps<br>- Tightening<br>- Angular tightening | <br>**2 ± 0,3**<br>**44° (re-used screws cleaned and greased)** |
| | **Cylinder head** |
| Coolant outlet housing | **0,8 ± 0,2** |
| Camshaft bearing caps | **1 ± 0,2** |
| Camshaft bearing cap covers | **0,9 ± 0,1** |
| Inlet manifold | **0,8 ± 0,2** |

| C3 | SPECIAL FEATURES - TIGHTENING TORQUES (m.daN ) |
|---|---|
| | **Cylinder head** |
| Exhaust manifold | **1,8 ± 0,2** |
| Sparking plugs | **2,2 ± 0,2** |
| VVT pulley cap | **4 ± 0,4** |
| VVT control electrovalve | **0,8 ± 0,2** |
| VVT inlet camshaft pulley screw | |
| - Pre-tightening | **2 ± 0,2** |
| - Tightening | **6,1 ± 0,6** |
| Exhaust camshaft pulley screw | **4,5 ± 0,4** |
| | **Flywheel / Clutch** |
| Engine flywheel | **6,7 ± 0,6 (coat the screws with LOCTITE FRENETANCH)** |
| Clutch mechanism | **2 ± 0,2** |
| | **Lubrication circuit** |
| Oil pressure switch | **2 ± 0,2** |
| Oil pump | **0,9 ± 0,1** |
| | **Cooling circuit** |
| Coolant pump | **1 ± 0,1** |
| Coolant outlet housing | **0,8 ± 0,1** |

# SPECIAL FEATURES - TIGHTENING TORQUES (m.daN )

C3

## Engines: 8HX - 8HW

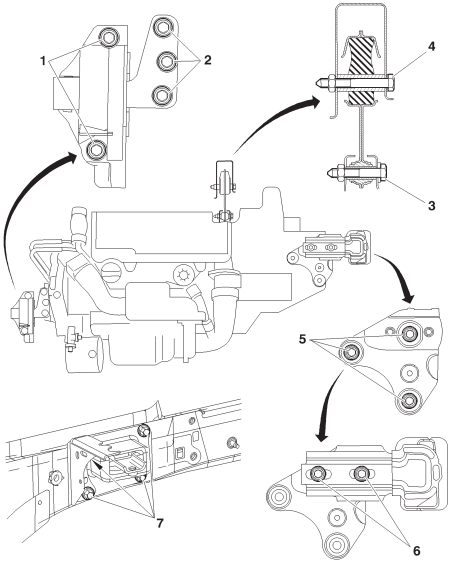


B1BP2LJP

**RH engine support**

**(1) : 4,5 ± 0,4**
**(2) : 3 ± 0,3**

**Torque reaction rod**

**(3) : 6 ± 0,6**
**(4) : 6 ± 0,6**

**LH engine support on gearbox**

**(5) : 5,4 ± 0,5**
**(6) : 6 ± 0,6**
**(7) : 5,5 ± 0,5**

| XSARA | SPECIAL FEATURES - TIGHTENING TORQUES (m.daN ) |
|---|---|

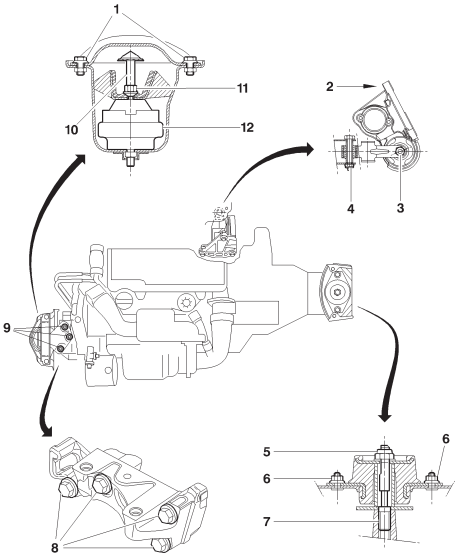


B1BP2WLP

**Engine: 8HZ**

**RH engine support**

| | |
|---|---|
| (1) | : 2 ± 0,2 |
| (9) | : 2,5 ± 0,2 |
| (10) | : 4,5 ± 0,5 |
| (11) | : 4,5 ± 0,5 |
| (12) | : 6 ± 0,6 |

**RH lower engine support**

| | |
|---|---|
| (8) | : 5,7 ± 0,9 |

**Torque reaction rod.**

| | |
|---|---|
| (2) | : 4,5 ± 0,5 |
| (3) | : 4,5 ± 0,5 |
| (4) | : 4,5 ± 0,5 |

**LH engine support**

| | |
|---|---|
| (5) | : 6,5 ± 0,6 |

**LH lower engine support**

| | |
|---|---|
| (6) | : 2,2 ± 0,2 |
| (7) | : 2 ± 0,2 |

| SPECIAL FEATURES - TIGHTENING TORQUES (m.daN ) | | | C3 - C3 PLURIEL - XSARA |
|---|---|---|---|
| **Engines** | **8HX** | **8HW** | **8HZ** |
| | **Crankshaft** | | |
| **Bearing cap fixing screw** | | | |
| Pre-tightening | **1** | | |
| Slackening | **YES** | | |
| Tightening | **3** | | |
| Angular tightening | **140°** | | |
| **Con rod nuts** | | | |
| Pre-tightening | **1** | | |
| Slackening | **YES** | | |
| Tightening | **1,5 ± 0,1** | | |
| Angular tightening | **100° ± 5°** | | |
| **Accessories drive pulley** | | | |
| Pre-tightening | **3 ± 0,4** | | |
| Angular tightening | **180° ± 5°** | | |
| | **Cylinder block** | | |
| **Sump** | **1 ± 0,1** | | |
| **Timing belt guide roller** | **4,5 ± 0,4** | | **3,7 ± 0,4** |
| **Timing belt tensioner roller** | **3 ± 0,3** | | **2,3 ± 0,3** |
| | | | |

| C3 - C3 PLURIEL - XSARA | SPECIAL FEATURES - TIGHTENING TORQUES (m.daN ) | | |
|---|---|---|---|
| **Engines** | **8HX** | **8HW** | **8HZ** |
| | **Cylinder head** | | |
| **Camshaft bearing covers** | | | |
| Pre-tightening | **0,5 ±** | | |
| Tightening | **1 ±** | | |
| **Fixings of camshaft sub-assemblies on cylinder head** | | | |
| Pre-tightening | **0,5** | | |
| Tightening | **1** | | |
| **Exhaust manifold** | **2,5 ± 0,2** | | |
| **Valve cover** | **2,5 ± 0,2** | | |
| **Camshaft pulley** | **4,3 ± 0,4** | | |
| | **Flywheel** | | |
| **Flywheel** | | | |
| Pre-tightening | **1,7** | | **1,7** |
| Tightening | **70° ± 5°** | | **75° ± 5°** |
| **Clutch mechanism** | **2 ± 0,2** | | |
| | **Lubrication circuit** | | |
| **Oil pump assembly** | | | |
| Pre-tightening | **0,5 ± 0,06** | | |
| Tightening | **0,9 ± 0,1** | | |
| **Coolant/oil heat exchanger** | **1 ± 0,1** | | |
| | | | |

| SPECIAL FEATURES - TIGHTENING TORQUES (m.daN ) | C3 - C3 PLURIEL - XSARA |
|---|---|
| **Engines** | **8HX - 8HW - 8HZ** |
| | **Diesel injection circuit** |
| **Spherical-base screws for diesel injection fixing fork** | **0,3 ± 0,1** |
| **Fuel high pressure common injection rail on engine block** | **2 ± 0,2** |
| **Unions on fuel high pressure common injection rail** | |
| Pre-tightening | **1,7± 0,2** |
| Tightening | **2,25 ± 0,2** |
| **Diesel injection pump on support** | |
| **Union on diesel injection** | **2,25 ± 0,2** |
| **Diesel injection pump pulley** | **5 ± 0,5** |
| **Union on diesel high pressure pump** | **2,25 ± 0,2** |
| | **Cooling circuit** |
| **Coolant pump** | |
| Pre-tightening | **0,3 ± 0,06** |
| Tightening | **1 ± 0,1** |
| **Coolant outlet housing** | |
| Pre-tightening | **0,3 ± 0,06** |
| Tightening | **0,7 ± 0,08** |

| C3 | SPECIAL FEATURES - TIGHTENING TORQUES (m.daN ) |
|---|---|

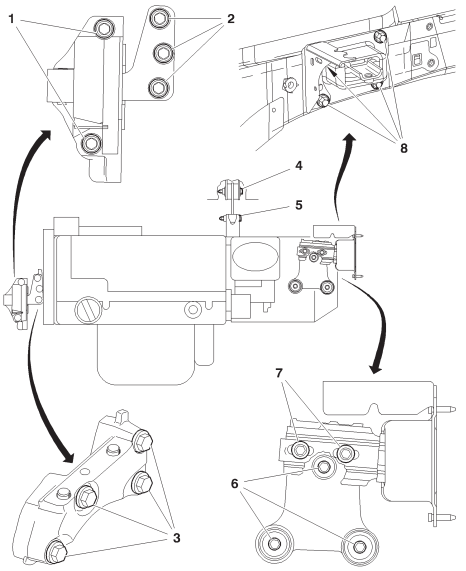


B1BP2MNP

**Engines: 8HV - 8HY**

**RH engine support**

| | |
|---|---|
| Screw (1) | : 6 ± 0,6 |
| Screw (2) | : 6 ± 0,6 |

**RH lower engine support**

| | |
|---|---|
| Screw (3) | : 5,7 ± 0,5 |

**LH upper engine support**

| | |
|---|---|
| Screw (7) | : 6 ± 0,6 |
| Screw (8) | : 5,5 ± 0,5 |

**LH lower engine support**

| | |
|---|---|
| Screw (6) | : 5,4 ± 0,5 |

**Torque reaction rod**

| | |
|---|---|
| Screw (4) | : 6 ± 0,6 |
| Screw (5) | : 6 ± 0,6 |

| SPECIAL FEATURES - TIGHTENING TORQUES (m.daN ) | C3 |
|---|---|
| **Engines** | **8HV - 8HY** |
| | **Crankshaft** |
| **Bearing cap fixing screw** | |
| Tightening | **3 ± 0,3** |
| Angular tightening | **140° ± 1°,4'** |
| **Crankshaft pullet hub** | |
| Tightening | **3 ± 0,3** |
| Angular tightening | **180° ± 5°** |
| | **Cylinder block** |
| **Oil sump** | **1 ± 0,1** |
| **Timing belt tensioner roller** | **4 ± 0,4** |
| **Timing belt guide roller** | **2,5 ± 0,2** |
| **Timing belt guide roller support** | |
| | **Cylinder head** |
| **Camshaft bearing cap cover** | **1 ± 0,1** |
| **Inlet manifold** | |
| **Exhaust manifold** | **2,5 ± 0,2** |
| **Cylinder head cover** | **Screws (M6) to 1 ± 0,2** |
| **Camshaft pinion** | **4,3 ± 0,4** |
| **Fuel high pressure pump pinion** | **5 ± 0,5** |

| C3 | SPECIAL FEATURES - TIGHTENING TORQUES (m.daN ) |
|---|---|
| **Engines** | **8HV - 8HY** |
| | **Flywheel - Clutch** |
| **Flywheel** | **1,7 ± 0,2** |
| **Clutch mechanism** | **2 ± 0,2** |
| | **Lubrication circuit** |
| **Oil pump assembly** | **0,9 ± 0,1** |
| **Oil/coolant heat exchanger** | **1 ± 0,1** |
| **Turbocharger lubrication pipe** | **2,2 ± 0,2** |
| | **Injection circuit** |
| **Injector fixing flange nut** | |
| Tightening | **0,4 ± 0,1** |
| Angular tightening | **65° ± 5°** |
| **Unions on fuel high pressure common injection rail** | **2,3 ± 0,2** |
| **Fuel high pressure pump** | |
| **Union on diesel injector** | |
| **Fuel high pressure pump pinion** | **5 ± 0,5** |
| **Union on fuel high pressure pump** | **2,3 ± 0,2** |
| | **Cooling circuit** |
| **Coolant pump** | **1 ± 0,2±** |

| SPECIAL FEATURES - TIGHTENING TORQUES (m.daN ) | | XSARA - XSARA PICASSO | | |
|---|---|---|---|---|
| | | CYLINDER HEAD (mm) | | |
| Engine types | | KFW | NFV | NFU |
| Maximum permissible bow | | 0,05 | | |
| Gasket surface regrinding | | - 0,20 | | |
| | | TIGHTENING TORQUES (m.daN) | | |
| Crankshaft bearing screws | Pre-tightening | 2 ± 0,2 | 2 ± 0,2 | |
| | Angular tighten | 45° | 50° ± 5° | |
| Connecting rod screws | Tightening | 3,8 ± 0,4 | | |
| Flywheel screw | Tightening | 6,5 ± 0,7 | | |
| Crankshaft pinion screw | Pre-tightening | | | |
| | Angular tighten | 10 ± 1 | | |
| Camshaft pulley screw | Pre-tightening | | | |
| | Angular tighten | 8 ± 0,8 | | |
| Camshaft hubs | | | 8 ± 0,8 | |
| Camshaft hub screw | Tightening | | 1 ± 0,1 | |
| | | | | |

| XSARA - XSARA PICASSO | | SPECIAL FEATURES - TIGHTENING TORQUES (m.daN ) | | | | | |
|---|---|---|---|---|---|---|---|
| | | CYLINDER HEAD (mm) | | | | | |
| Engine types | | 6FZ | RFN | RFS | WJY | RHY | RHZ |
| Maximum permissible bow | | 0,05 | | | 0,03 | | |
| Gasket surface regrinding | | - 0,30 | | - 0,20 | | - 0,40 | |
| | | TIGHTENING TORQUES ( m.daN) | | | | | |
| Crankshaft bearing screws | Pre-tightening | (1) Ø 11 : 1 ± 0,1<br>(2) Ø 6 : 1 ± 0,1 | 2 ± 0,1 | | | 2,5 ± 0,3 | |
| | Slackening | Ø 11 (only) | | | | | |
| | Tightening | Ø 11 to 1 ± 0,1<br>then to 2 ± 0,1 | | 8,5 ± 0,8 | 7 ± 0,7 | | |
| | Tightening Angular | Ø 11 at 70° ± 5° | 60° ± 6° | | | 60° ± 6° | |
| | Tightening | Ø 6 to 1 ± 0,1 | | | | | |
| Connecting rod screws | Pre-tightening | 1 ± 0,1 | | 4 ± 0,4 | 2 ± 0,2 | | |
| | Slackening | 180° (1/2 turn) | | | | | |
| | Tightening | 2,3 ± 0,2 | 2,3 ± 0,2 | 2± 0,2 | | | |
| | Angular tightening | 46° ± 5° | 46° ±4,6° | 70° ± 7° | 70° ± 7° | | |

# SPECIAL FEATURES - TIGHTENING TORQUES (m.daN )

## XSARA PICASSO

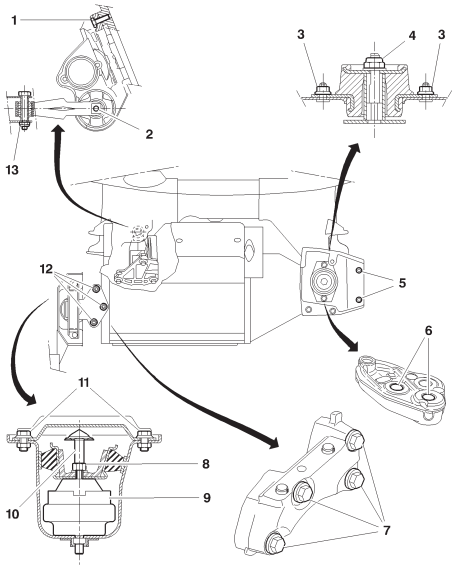


B1BP2Z4P

### Engines: 9HZ - 9HY

**Torque reaction rod**

1 : 5,4 ± 0,8
2 : 5,4 ± 0,8
13 : 6 ± 0,9

**LH upper engine support**

3 : 2,1 ± 0,2
4 : 5 ± 0,5

**LH lower engine support**

5 : 2,1 ± 0,2
6 : 5,7 ± 0,8

**RH lower engine support**

7 : 5,5 ± 0,5

**RH engine support**

8 : 4,5 ± 0,4
9 : 4,5 ± 0,6
10 : 2,5 ± 0,6
11 : 2,1 ± 0,2
12 : 6,1 ± 0,6

| XSARA PICASSO | SPECIAL FEATURES - TIGHTENING TORQUES (m.daN ) |
|---|---|
| **Engines** | **9HZ - 9HY** |
| | **Crankshaft** |
| **Bearing cap fixing screw** | |
| Pre-tightening | **1 ± 0,2** |
| Slackening | **180°** |
| Tightening | **3 ± 0,3** |
| Angular tightening | **140°** |
| **Con rod screws** | |
| Tightening | **1 ± 0,1** |
| Angular tightening | **100 ± 5°** |
| **Accessories drive pulley** | |
| Pre-tightening | **3,5 ± 0,4** |
| Angular tightening | **190 ± 5°** |
| | **Cylinder block** |
| **Sump** | **1,3 ± 0,1** |
| **Timing belt guide roller** | **3,7 ± 0,3** |
| **Timing belt tensioner roller** | **2,7 ± 0,2** |
| | |

| SPECIAL FEATURES - TIGHTENING TORQUES (m.daN ) | XSARA PICASSO |
|---|---|
| **Engines** | **9HZ - 9HY** |
| | **Cylinder head** |
| **Camshaft bearing covers** | |
| Pre-tightening | **0,5 ± 0,1** |
| Tightening | **1 ± 0,1** |
| **Exhaust manifold** | **3 ± 0,3** |
| **Camshaft pulley** | |
| Pre-tightening | **2 ± 0,2** |
| Angular tightening | **50 ± 5°** |
| **Cylinder head** | |
| Pre-tightening | **2 ± 0,2** |
| Tightening | **4 ± 0,5** |
| Angular tightening | **260 ± 5°** |
| **EGR valve** | **1 ± 0,1** |
| | **Flywheel - Clutch** |
| **Flywheel** | |
| Pre-tightening | **3 ± 0,3** |
| Angular tightening | **90 ± 5°** |
| **Clutch mechanism** | **2 ± 0,2** |

| XSARA PICASSO | SPECIAL FEATURES - TIGHTENING TORQUES (m.daN ) |
|---|---|
| **Engines** | **9HZ - 9HY** |
| | **Lubrication circuit** |
| **Oil pump assembly** | |
| Pre-tightening | **0,5 ± 0,1** |
| Tightening | **0,9 ± 0,1** |
| **Oil/coolant heat exchanger** | **1 ± 0,2** |
| **Turbocharger lubrication pipe** | **3 ± 0,5** |
| | **Diesel injection circuit** |
| **Injector fixing flange nut** | |
| Pre-tightening | **4 ± 0,1** |
| Angular tightening | **65° ± 5°** |
| **Fuel high pressure common injection rail on engine block** | **2,2 ± 0,2** |
| **Union on fuel high pressure common injection rail** | |
| Pre-tightening | **1,7 ± 0,2** |
| Tightening | **2,2 ± 0,2** |
| **Diesel injection pump on support** | **2,2 ± 0,2** |
| **Union on diesel injector** | |
| Pre-tightening | **2 ± 0,5** |
| Tightening | **2,5 ± 0,3** |

| SPECIAL FEATURES - TIGHTENING TORQUES (m.daN ) | XSARA PICASSO |
|---|---|
| **Engines** | **9HZ - 9HY** |
| | **Diesel injection circuit** |
| **Diesel injection pump pulley** | **5 ± 0,5** |
| **Union on fuel high pressure pump** | |
| Pre-tightening | **2 ± 0,5** |
| Tightening | **2,5 ± 0,3** |
| | **Cooling circuit** |
| **Coolant pump** | |
| Pre-tightening | **0,3 ± 0,1** |
| Tightening | **0,9 ± 0,1** |
| **Coolant outlet housing** | |
| Pre-tightening | **0,3 ± 0,1** |
| Tightening | **0,7 ± 0,1** |

| C2 - C3 - C3 PLURIEL | CYLINDER HEAD |
|---|---|

**Engines: HFX - KFV - NFU**

**Identification of cylinder head gasket**

| Engine types | Thicknesses (Standard) | Thicknesses (repair) | Thickness references |
|---|---|---|---|
| HFX | 1,2 ± 0,1 | 1,4 ± 0,1 | 2 |
| KFV | | | 1 |
| NFU | 0,66 ± 0,04 | | 4 |
| KFU | 1,2 ± 0,1 | 1,5 ± 0,1 | |

**Identification marks**

**1,2,3,4** = Type of engine

**A,B,D** =Suppliers.

**C** = Gasket material.

**R** = Repair.

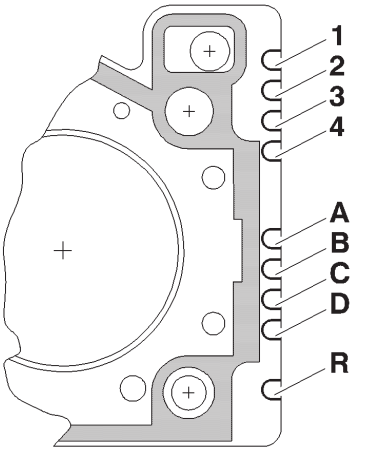


B1BP10KC

# CYLINDER HEAD — C2 - C3 - C3 PLURIEL

**Engines: HFX - KFV - NFU**

## Cylinder head tightening (m.daN)

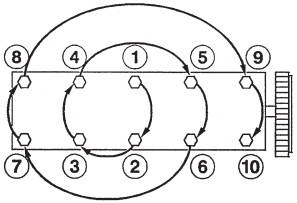


**NOTE:** Retightening of the cylinder head after a completed repair is prohibited.

B1BP10KC

### HFX - KFV

Tightening **: 2 ± 0,2**
Angular tightening **: 240° ± 5°**

*(In the order 1 to 10)*

### KFU

Pre-tightening **: 1,5 ± 0,2**
Tightening **: 2,5 ± 0,2**
Angular tightening **: 200 ± 5°**

*(In the order 1 to 10)*

### NFU

Tightening **: 2 ± 0,2**
Angular tightening **: 260° ± 5°**

*(In the order 1 to 10)*

## Cylinder head bolts

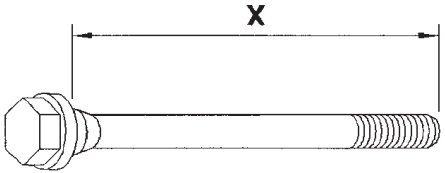


**NOTE:** Oil the threads and under the heads of the bolts (*use engine oil or Molykote G Rapid Plus*).

B1BP1DVC

| X =MAX. re-usable length | | |
|---|---|---|
| **HFX - KFV** | **KFV** | **NFU** |
| **175,5 ± 0,5** | **119** | **122 ± 0,3** |

| XSARA - XSARA PICASSO | | | CYLINDER HEAD | | |
|---|---|---|---|---|---|
| Engines: KFW - NFV - NFU | | | | | |
| Identification of cylinder head gasket | | | | | |
| Engine type | | | KFW | NFV | NFU |
| Identification marks | | | (Notch on cylinder head gasket) * | | |
| Thickness | | 1 | 1 | 1 | 1 |
| | | 2 | 0 | 0 | 1 |
| | | 3 | 0 | 0 | 1 |
| | | 4 | 0 | 1 | 1 |
| Suppliers | CURTY | A | 0 | | |
| | | B | 0 | | |
| | | D | 0 | | |
| | MEILLOR | A | 1 | | |
| | | B | 1 | | |
| | | D | 0 | | |
| | ELRING | A | | | |
| | | B | | | |
| | | D | | | |
| | REINZ | A | 1 | | |
| | | B | 0 | | |
| | | D | 0 | | |
| Material | | C | 0 (With asbestos) – 1 (Without asbestos) | | |
| Repair | | R | 0 (Standard gasket) – 1 (Repair gasket) | | |

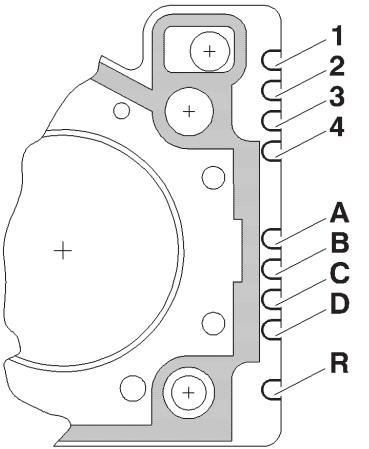


0 = Without notch

1 = One notch

B1BP10KC

# CYLINDER HEAD (Continued) — XSARA - XSARA PICASSO

**Engines: KFW - NFV - NFU**

## Cylinder head tightening (m.daN)

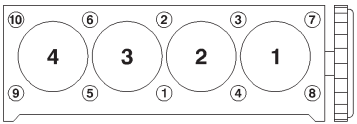


B1BP10LC

### KFW - NFV

| | |
|---|---|
| Pre-tightening | **: 2** |
| Angular tightening | **: 240 ± 5°** |

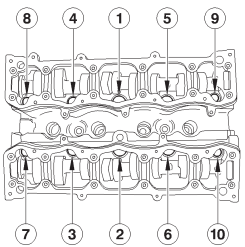


B1DP13NC

### NFU

| | |
|---|---|
| Pre-tightening | **: 2** |
| Angular tightening | **: 260 ± 5°** |

## One Cylinder head bolts

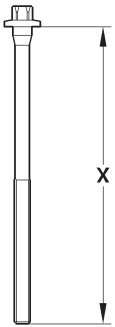


**NOTE:** Oil the threads and under the heads of the bolts *(use engine oil or Molykote G Rapid Plus).*

B1DP059C

| X =MAX. re-usable length | |
|---|---|
| **KFW - NFV** | **NFU** |
| **X = 175,5 ± 0,5 mm** | **X = 122,6 mm** |

| XSARA - XSARA PICASSO | CYLINDER HEAD |
|---|---|

**Engine: 6FZ**

**Identification of cylinder head gasket**

| | Nominal dimension | Repair dimension | | |
|---|---|---|---|---|
| Identification zone "d" | 4 – 5 | 2 – 4 – 5 | | |
| Marking zone "e" | | R1 | R2 | R3 |
| Gasket thickness (mm) | 0,8 | 1 | 1,1 | 1,3 |
| Supplier | MEILLOR | | | |

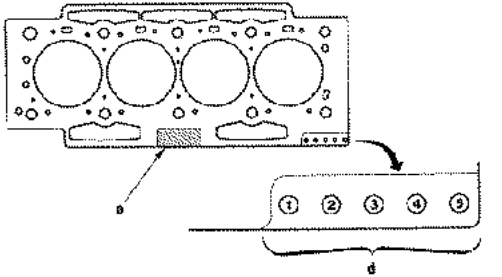


B1DP183D

**Identification marks**

**"d"** = Identification zone.

**"e"** = Marking zone.

**NOTE:** 3 layer metallic gasket

# CYLINDER HEAD

## XSARA - XSARA PICASSO

### Engine: 6FZ

### Cylinder head tightening (m.daN)

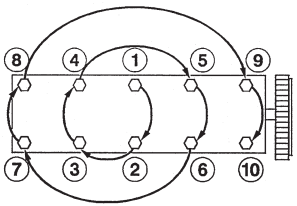


B1DP05BC

**6FZ**

| | |
|---|---|
| Pre-tightening | **: 1,5 ± 0,2** |
| Tightening | **: 5 ± 0,2** |
| Destightening | **: 360 ° (1 turn)** |
| Tightening | **: 2 ± 0,2** |
| Angular tightening | **: 285° ± 5°** |

**NOTE:** Oil the threads and under the heads of the bolts *(use engine oil or Molykote G Rapid Plus)*.

### One Cylinder head bolts

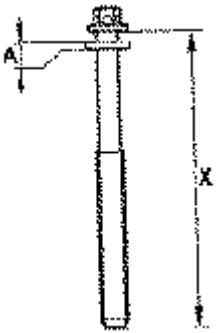


B1DP16FC

**A** = Washer thickness: **4 ± 0,2 mm**.
**X** = Length under heads of new bolts = **144,5 ± 0,5 mm**.

| X =MAX. re-usable length |
|---|
| **6FZ** |
| **X = 147 mm** |

| XSARA - XSARA PICASSO | CYLINDER HEAD |
|---|---|

**Engine: RFN**

**Identification of cylinder head gasket**

| | Nominal dimension | Repair dimension | |
|---|---|---|---|
| Identification zone "d" | 4 – 5 | 2 – 4 – 5 | |
| Marking zone "e" | | R1 | R2 |
| Gasket thickness (mm) | 0,8 | 1,1 | 1,4 |
| Supplier | MEILLOR | | |

Multilayer metallic gasket

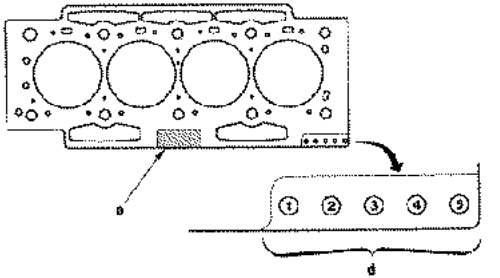


B1DP183D

# CYLINDER HEAD — XSARA - XSARA PICASSO

**Engine: RFN**

## Cylinder head tightening (m.daN)

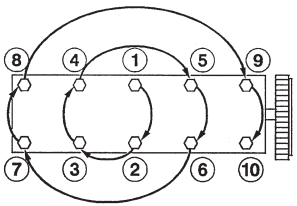


B1DP05BC

**RFN**

| | |
|---|---|
| Pre-tightening | **: 1,5 ± 0,2** |
| Tightening | **: 5 ± 0,2** |
| Destightening | **: 360 ° (1 turn)** |
| Tightening | **: 2 ± 0,2** |
| Angular tightening | **: 285° ± 5°** |

**NOTE:** Oil the threads and under the heads of the bolts *(use engine oil or Molykote G Rapid Plus)*.

## One Cylinder head bolts

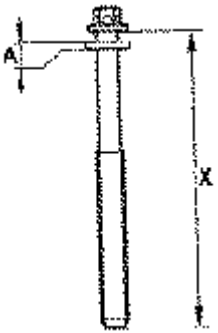


B1DP16FC

**A** = Washer thickness: **4 ± 0,2 mm**.
**X** = Length under heads of new bolts = **144,5 ± 0,5 mm**.

| X =MAX. re-usable length |
|---|
| **RFN** |
| **X = 147 mm** |

| XSARA | CYLINDER HEAD |
|---|---|

**Engine: RFS**

**Identification of cylinder head gasket**

| Engine type | | | RFS |
|---|---|---|---|
| Identification marks | | | (Notch on cylinder head gasket) * |
| Suppliers | MEILLOR | A | 1 |
| | | B | 0 |
| | | C | 1 |
| | | D | 0 |
| | | E | 0 |

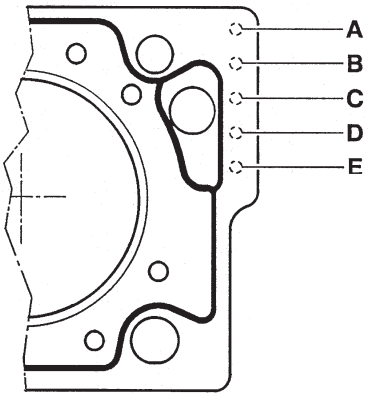


* 0 = Without notch
1 = One notch

B1BP004C

# CYLINDER HEAD — XSARA

**Engine: RFS**

## Cylinder head tightening (m.daN)

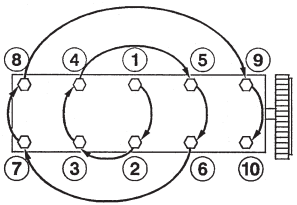


B1DP05BC

| RFS | |
|---|---|
| Pre-tightening | : 3,5 |
| Slackening | : NO |
| Tightening | : 7 |
| Angular tightening | : 160° |

**NOTE:** Oil the threads and under the heads of the bolts *(use engine oil or Molykote G Rapid Plus)*.

## One Cylinder head bolts

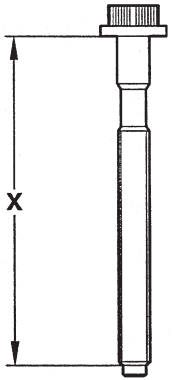


B1DP13PC

| X =MAX. re-usable length |
|---|
| RFS |
| 112 mm |

| C2 - C3 - C3 PLURIEL - XSARA | CYLINDER HEAD |
|---|---|

**Engines: 8HX - 8HW - 8HZ**

**Identification of cylinder head gasket**

| Engine types | Supplier | Piston standproud (mm) | Thicknesss (mm) | No. of notches at “d “ | No. of notches at “e” | |
|---|---|---|---|---|---|---|
| 8HY - 8HV | ELRING | 0,771 to 0,820 | 1,35 | 1 | 1 | **Type of gasket:** Metallic multilayer<br>**«d»** Thickness reference.<br>**«e»** Engine reference. |
| | | 0,611 to 0,720 | 1,25 | 2 | | |
| | | 0,721 to 0,770 | 1,30 | 3 | | |
| | | 0,821 to 0,870 | 1,40 | 4 | | |
| | | 0,871 to 0,977 | 1,45 | 5 | | |

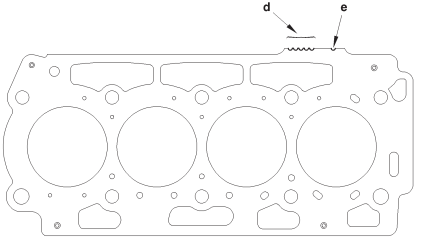


B1DP1CMD

# CYLINDER HEAD

C3

## Engines: 8HY - 8HV

### Identification of cylinder head gasket

| Engine types | Supplier | Piston standproud (mm) | Thicknesss (mm) | No. of notches at “d” | No. of notches at “e” |
|---|---|---|---|---|---|
| 8HY - 8HV | ELRING | 0,771 to 0,820 | 1,35 | 1 | 2 |
| | | 0,611 to 0,720 | 1,25 | 2 | |
| | | 0,721 to 0,770 | 1,30 | 3 | |
| | | 0,821 to 0,870 | 1,40 | 4 | |
| | | 0,871 to 0,977 | 1,45 | 5 | |

**Type of gasket:**
Metallic multilayer

**«d»** Thickness reference.

**«e»** Engine reference.

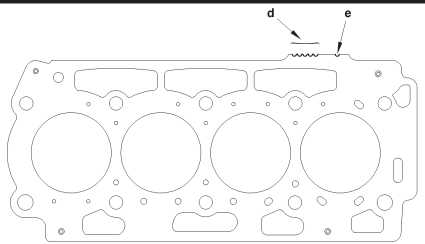


B1DP1CKD

| C2 - C3 - C3 PLURIEL | CYLINDER HEAD |
|---|---|

**Engines: 8HX - 8HW - 8HZ - 8HV - 8HY**

## Cylinder head tightening (m.daN)

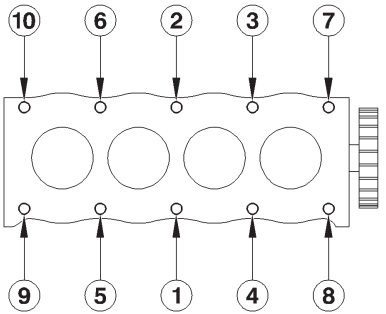


**The cylinder head gasket is dry-fitted.**

**NOTE:** Retightening of the cylinder head after a completed repair is prohibited.

**8HX - 8HW - 8HZ - 8HV - 8HY**

| | |
|---|---|
| Pre-tightening | **: 2 ± 0,2 m.daN** |
| Tightening | **: 4 ± 0,4 m.daN** |
| Angular tightening | **: 230° ± 5°** |

*(In the order 1 to 10)*

**NOTE:**

- The bolts should have been thoroughly cleaned and dried with a dry metal brush.
- Oil the threads and under the heads of the bolts *(use engine oil or Molykote G Rapid Plus)*.
- Pass a tap into the holes in the cylinder block.

B1DP1CLC

## One Cylinder head bolts

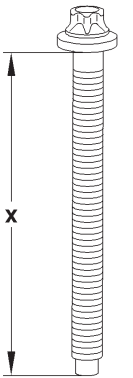


B1DP1DBC

**X =MAX. re-usable length**

**8HX - 8HW - 8HZ - 8HV - 8HY**

**X = 149 mm**

| CYLINDER HEAD | | | | | | XSARA PICASSO |
|---|---|---|---|---|---|---|
| Engines: 9HZ - 9HY | | | | | | |
| Identification of cylinder head gasket | | | | | | |
| Engine types | Supplier | Piston standproud (mm) | Thicknesss (mm) | No. of notches at “d” | No. of notches at “e” | **Type of gasket:** Metallic multilayer<br>**«d»** Thickness reference.<br>**«e»** Engine reference. |
| 9HZ - 9HY | FEDERAL MOGUL | 0,685 to 0,734 | 1,35 | 1 | 3 | |
| | | 0,533 to 0,634 | 1,25 | 2 | | |
| | | 0,635 to 0,684 | 1,30 | 3 | | |
| | | 0,735 to 0,784 | 1,40 | 4 | | |
| | | 0,785 to 0,886 | 1,45 | 5 | | |

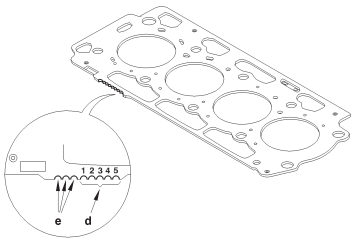


B1DP1HOD

| XSARA PICASSO | CYLINDER HEAD |
|---|---|

**Engines: 9HZ - 9HY**

## Cylinder head tightening (m.daN)

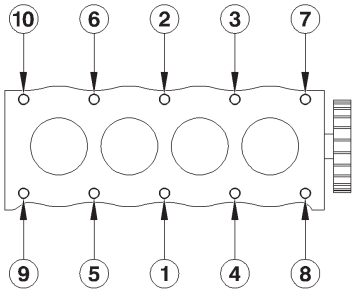


**The cylinder head gasket is dry-fitted.**

**NOTE:** Retightening of the cylinder head after a completed repair is prohibited.

B1DP1CLC

**9HZ - 9HY**

| | |
|---|---|
| Pre-tightening | **: 2 ± 0,2 m.daN** |
| Tightening | **: 4 ± 0,4 m.daN** |
| Angular tightening | **: 260° ± 5°** |

*(In the order 1 to 10)*

**NOTE:**
- The bolts should have been thoroughly cleaned and dried with a dry metal brush.
- Oil the threads and under the heads of the bolts *(use engine oil or Molykote G Rapid Plus)*.
- Pass a tap into the holes in the cylinder block.

## One Cylinder head bolts

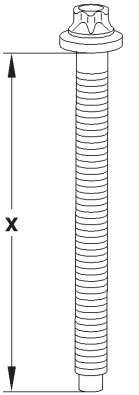


B1DP1DBC

| X =MAX. re-usable length |
|---|
| **9HZ - 9HY** |
| **X = 147 mm** |

# CYLINDER HEAD — XSARA

## Engine: WJY

### Identification of cylinder head gasket

| Plaque Engine | Piston standproud (mm)-(*) | Thickness (mm) ± 0,04 | Number of holes at A | Number of holes at B |
|---|---|---|---|---|
| WJY | 0,51 to 0,55 | 1,26 | 2 | 1 |
| | 0,55 to 0,59 | 1,30 | | 2 |
| | 0,59 to 0,63 | 1,34 | | 3 |
| | 0,63 to 0,67 | 1,38 | | 4 |
| | 0,67 to 0,71 | 1,42 | | 5 |

**(A) =** Repère engine.

**(B) =** Thickness references.

**(*) = Take the highest piston as a reference.**

WJY

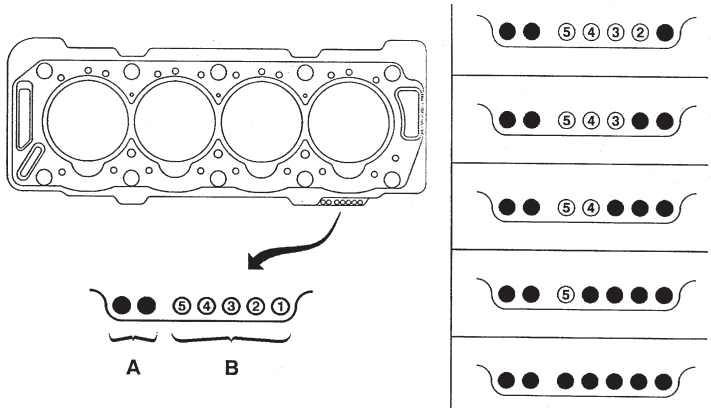


B1DP14QD

| XSARA - XSARA PICASSO | CYLINDER HEAD |
|---|---|

**Engines: RHY - RHZ**

**Identification of cylinder head gasket**

| Plaque Engine | Piston standproud (mm) | Thickness (mm) | No. of notches at A |
|---|---|---|---|
| RHY RHZ | 0,47 to 0,605 | 1,30 ± 0,06 | 1 |
| | 0,605 to 0,655 | 1,35 ± 0,06 | 2 |
| | 0,655 to 0,705 | 1,40 ± 0,06 | 3 |
| | 0,705 to 0,755 | 1,45 ± 0,06 | 4 |
| | 0,755 to 0,83 | 1,50 ± 0,06 | 5 |

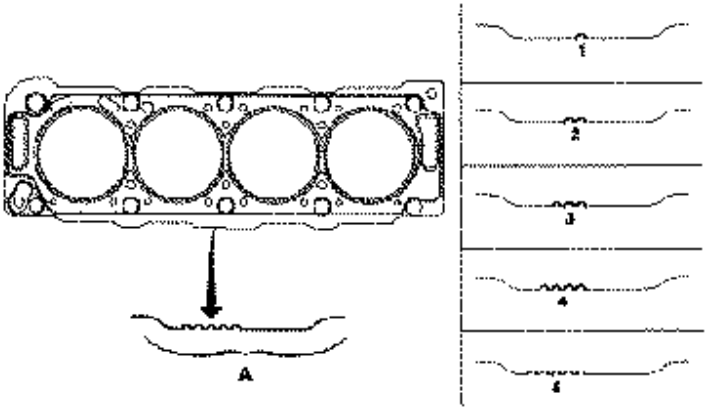


B1DP15AD

# CYLINDER HEAD (Continued) — XSARA - XSARA PICASSO

**Engines: WJY - RHY - RHZ**

## Cylinder head tightening (m.daN)

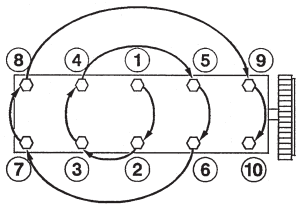


**NOTE:** Oil the threads and under the heads of the bolts (*use engine oil or Molykote G Rapid Plus).*

B1DP05BC

### WJY

| | |
|---|---|
| Pre-tightening | : 2 |
| Tightening | : 6 |
| Angular tightening | : 180° |

### RHY - RHZ

| | |
|---|---|
| Pre-tightening | : 2 |
| Tightening | : 6 |
| Angular tightening | : 220° |

## One Cylinder head bolts

### WJY

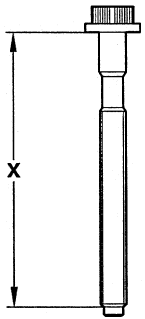


B1DP13PC

### RHY - RHZ

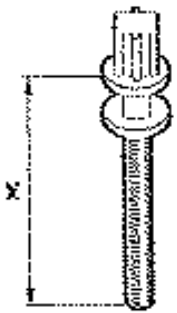


B1DP15EC

**X =MAX. re-usable length**

| WJY | RHY - RHZ |
|---|---|
| 125,5 mm | 133,3 mm |

| ALL TYPES | BELT TENSION/SEEM UNITS CORRESPONDENCE TABLE | |
|---|---|---|
| ↓ **4099-T** (C.TRONIC.105) | ← Tools → | **4122-T** (C.TRONIC.105.5) ↓ |

| TYPE DE COURROIES \ 1 daN = 1 Kg daN | | 5 | 10 | 15 | 20 | 25 | 30 | 35 | 40 | 45 | 50 | 55 | 60 | 65 | 70 | 75 | 80 | 85 | 90 | 95 | 100 | daN \ 1 daN = 1 Kg TYPE DE COURROIES |
|---|---|---|---|---|---|---|---|---|---|---|---|---|---|---|---|---|---|---|---|---|---|---|
| S | | 18 | 28 | 36 | 44 | 51 | 58 | 64 | 70 | 76 | 82 | 88 | 94 | 100 | 106 | 112 | | | | | | |
| | | 18 | 28 | 36 | 44 | 51 | 58 | 64 | 70 | 76 | 82 | 88 | 94 | 100 | 106 | 112 | | | | | | |
| P | E5 | 18 | 23 | 27 | 31 | 34 | 37 | 40 | 43 | 46 | 49 | 52 | 54 | 56 | 58 | 60 | 62 | 64 | 66 | 68 | | |
| | E6 | 25 | 32 | 39 | 45 | 50 | 54 | 58 | 62 | 66 | 70 | 74 | 78 | 81 | 84 | 86 | 88 | 89 | 90 | 91 | | |
| | | 32 | 41 | 48 | 55 | 62 | 69 | 76 | 83 | 90 | 96 | 102 | 108 | 114 | 120 | 126 | 132 | 138 | 144 | 150 | | |
| P | E6 | 27 | 36 | 43 | 49 | 55 | 61 | 66 | 71 | 76 | 80 | 84 | | | | | | | | | | |
| | | 32 | 41 | 49 | 57 | 63 | 69 | 75 | 81 | 87 | 93 | 99 | | | | | | | | | | |
| P | E6 | 26 | 35 | 42 | 48 | 53 | 58 | 63 | 68 | 73 | 78 | 82 | | | | | | | | | | |
| | | 30 | 40 | 47 | 54 | 61 | 68 | 75 | 81 | 87 | 93 | 99 | | | | | | | | | | |
| P | E7 | 45 | 55 | 65 | 74 | 83 | 89 | 95 | 101 | 107 | 113 | 119 | | | | | | | | | | |
| | | 36 | 49 | 52 | 64 | 73 | 80 | 86 | 92 | 98 | 104 | 110 | | | | | | | | | | |
| T | E7 | 28 | 34 | 39 | 44 | 48 | 52 | 56 | 60 | 64 | 68 | 71 | | | | | | | | | | |
| | | 34 | 41 | 48 | 55 | 62 | 69 | 76 | 83 | 89 | 96 | 102 | | | | | | | | | | |
| T | E8 | 32 | 39 | 45 | 51 | 56 | 61 | 66 | 71 | 76 | 79 | 81 | | | | | | | | | | |
| | | 37 | 43 | 51 | 59 | 66 | 73 | 80 | 86 | 92 | 98 | 104 | | | | | | | | | | |
| T | E9 | 52 | 60 | 67 | 74 | 81 | 88 | 94 | 100 | 106 | 110 | 114 | | | | | | | | | | |
| | | 49 | 57 | 63 | 69 | 75 | 81 | 87 | 93 | 99 | 105 | 111 | | | | | | | | | | |

| AUXILIARY EQUIPMENT DRIVE BELT | | | | | | | | | PETROL |
|---|---|---|---|---|---|---|---|---|---|
| | TU | | | ET | TU | | EW | | XU |
| | 1 | 3 | | 3 | 5 | | 7 | 10 | |
| | JP | | | J4 | JP + | JP4 | J4 | | J4RS |
| Engine type | HFX | KFV | KFW | KFU | NFV | NFU | 6FZ | RFN | RFS |
| **C2** | 1.1i | 1.4i | | | | 1.6i 16V | | | |
| See pages: | 118 to 119 | | | | | 118 to 119 | | | |
| **C3** | 1.1i | 1.4i | | 1.4i 16V | | 1.6i 16V | | | |
| See pages: | 118 to 119 | | | 123 to 124 | | 118 to 119 | | | |
| **C3 Pluriel** | | 1.4i | | | | 1.6i 16V | | | |
| See pages: | | 118 to 119 | | | | 118 to 119 | | | |
| **XSARA** | | | 1.4i | | | 1.6i 16V | | 2.0i 16V | 2.0i 16V |
| See pages: | | | 122 | | | 125 | | 128 | 126 to 127 |
| **XSARA Picasso** | | | | | 1.6i | | 1.8i 16V | 2.0i 16V | |
| See pages: | | | | | 120 to 121 | | 128 | | |

| DIESEL | AUXILIARY EQUIPMENT DRIVE BELT | | | | | | | | | |
|---|---|---|---|---|---|---|---|---|---|---|
| | DV | | | | | | | DW | | |
| | 4 | | | | | 6 | | 8 | 10 | |
| | TD | | | TED4 | | | | B | TD | ATED |
| Engine type | 8HX | 8HW | 8HZ | 8HV | 8HY | 9HZ | 9HY | WJY | RHY | RHZ |
| C2 | 1.4 HDi | | | | | | | | | |
| See pages: | 135 to 136 | | | | | | | | | |
| C3 | 1.4 HDi | 1.4 HDi | | 1.4 HDi 16V | 1.4 HDi 16V | | | | | |
| See pages: | 135 to 136 | | | 139 | | | | | | |
| C3 Pluriel | 1.4 HDi | | | | | | | | | |
| See pages: | 135 to 136 | | | | | | | | | |
| XSARA | | | 1.4 HDi | | | | | 1.9 D | 2.0 HDi | 2.0 HDi |
| See pages: | | | 137 to 138 | | | | | 129 to 134 | 141 to 144 | |
| XSARA Picasso | | | | | | 1.6 HDi 16V | 1.6 HDi 16V | | 2.0 HDi | |
| See pages: | | | | | | 140 | | | 141 to 144 | |

# AUXILIARY EQUIPMENT DRIVE BELT 2002 | ALL TYPES

**Engines: All Types Petrol and Diesel**

**Tools.**

- Belt tension measuring instrument **: 4122 - T.** *(C.TRONIC 105.5)*

**WARNING: If using tool 4099-T** *(C.TRONIC 105)*, refer to the correspondence table on page 96.

**Essential.**

**- Before refitting the auxiliary equipment drive belt, check that:**

**- 1 /** The roller(s) rotate freely *(no play or stiffness).*

**- 2 /** The belt is correctly engaged in the grooves of the various pulleys.

## C2 - C3 - C3 PLURIEL

# AUXILIARY EQUIPMENT DRIVE BELT

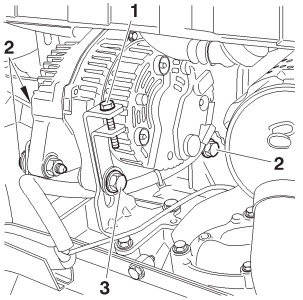


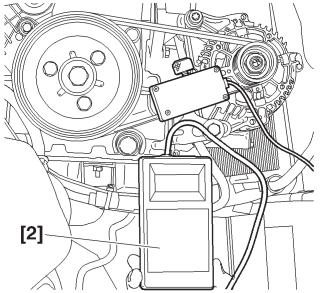


**Engines: HFX - KFV - NFU**

**Tools.**

**[1]** Pliers for removing plastic pegs **: 7504 –T**
**[2]** Belt tension measuring instrument **: 4122-T**

**Vehicle without air conditioning.**

**Remove.**

Slacken:

- Screw **(2).**
- Screw **(3).**
- Tensioning screw **(1).**

Push the alternator back towards the engine.
Remove the belt.

**Refit.**

Refit the belt.
Respect the following sequence:
- Crankshaft pinion.
- Alternator pulley.

Place tool **[2]** on the belt.
Tighten screw **(1)** to achieve a tension of:
**55 ± 3 SEEM units.**
Tighten:
- Screw **(3)**.
- Screw **(2)**.

Remove tool **[2]** and complete the refitting.

| B1BP2LSC | B1BP2LTC |
|---|---|

# AUXILIARY EQUIPMENT DRIVE BELT



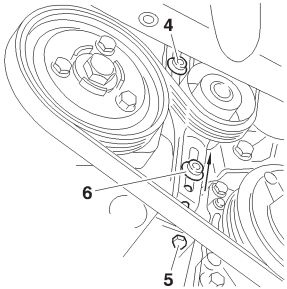


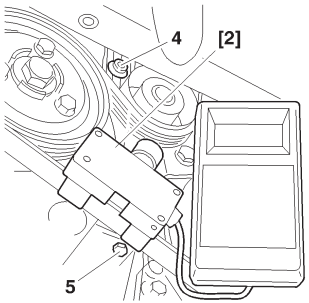


**Engines: HFX - KFV - NFU**

**Vehicle with air conditioning.**

**Remove**

**Slacken:**

- Screws **(6)**, **(4)** and **(5)**.
- Fully detension the belt by acting on the tensioner roller.
- Remove the accessories drive belt.

**Refit.**

Respect the following sequence:

- Crankshaft pinion.
- Aircon compressor pulley.
- Guide roller.
- Alternator pulley.
- Tensioner roller.

Place tool **[2]** on the belt.

- Tighten screw **(5)** to achieve a belt tension of:

  **120 ± 3 SEEM units.**
- Tighten screws **(4)** and **(6)**
- Remove tool **[2]**.
- Complete the refitting.

| B1BP10VC | B1BP10XC |
|---|---|

| XSARA PICASSO | AUXILIARY EQUIPMENT DRIVE BELT |
|---|---|

**Engine: NFV**

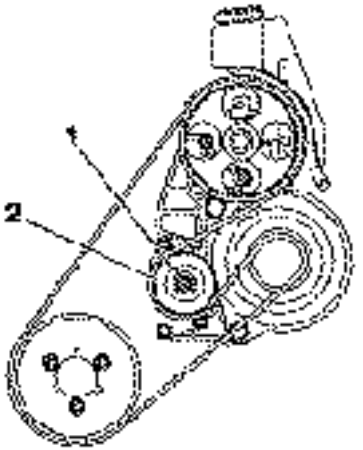


B1BP234C

**Without air conditioning.**

**Tools.**

| | |
|---|---|
| **[1]** Pliers for removing plastic pegs | **: 7504 –T** |
| **[2]** Belt tension measuring instrument | **: 4122 –T** |
| **[3]** TORX spanner | |

**Remove.**
- Release the central screw **(1),** tool **[3]**
- Detension the tensioner roller **(2)**, *(flat spanner 27 on flat)*.
- Remove the belt.

**Refit.**
- Position the belt.
- Hold the belt in position using the tensioner roller **(2)**.
- Pre-tension the belt **120 SEEM units**, tool **[2]**.
- Lock the central screw **(1),** tool **[3]**.
- Remove the tool **[2]**.
- Rotate the crankshaft **2** to **4** times.
- Check the tension, **120 SEEM units**.
- If not, restart the operation.

# AUXILIARY EQUIPMENT DRIVE BELT

## XSARA PICASSO

### Engine: NFV

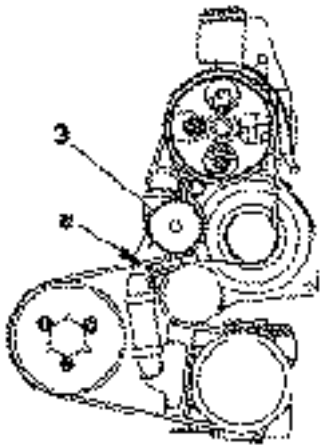


B1BP235C

### With air conditioning.

**Tools.**

**[1]** Pliers for removing plastic pegs **: 7504 –T**
**[2]** Belt tension measuring instrument **: 4122 –T**
**[3] 10 mm** square *(drain spanner)*
**[4]** TORX spanner

**Remove.**
- Detension the automatic tensioner, tool **[3].**
- Place a **Ø 6 mm** peg at **(a)** to immobilise the automatic tensioner.
- Remove the belt.

**Refit.**
- Position the belt
- Detension the automatic tensioner, tool **[3].**
- Remove the **Ø 6 mm** peg.
- Release the automatic tensioner.
- Remove the tool **[3].**

| XSARA | AUXILIARY EQUIPMENT DRIVE BELT 2002 |
|---|---|

**Engine: KFW**

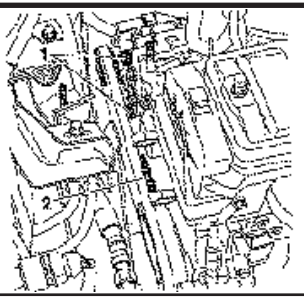


### Alternator

**[1]** Belt tension measuring instrument: **4122-T**

- Tension the belt using the screw **(2)**.
- Tension should be: **102 ± 7 SEEM units.**
- Tighten the screws **(1)**.

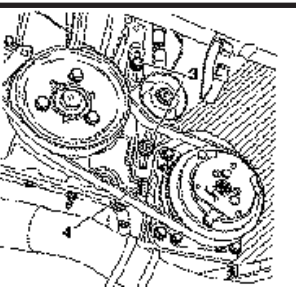


### With air conditioning

**[1]** Belt tension measuring instrument: **4122-T**

- Tension the belt using the screw **(4)**.
- Tension should be: **102 ± 7 SEEM units**.
- Tighten the screws **(3)**.

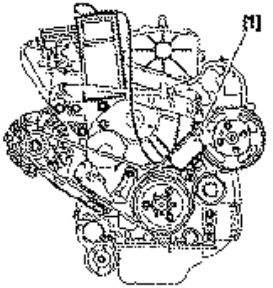


### Power-assisted steering

- New belt **100 SEEM units.**
- Re-used belt

B1BP1B2C | B1BP122C

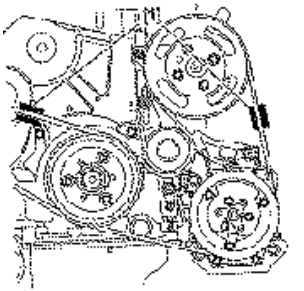


### Power steering and air con.

- New belt **100 SEEM units.**
- Re-used belt **75 SEEM units.**

B1BP1B3C | B1BP124C

# AUXILIARY EQUIPMENT DRIVE BELT

C3

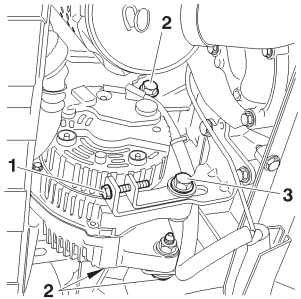


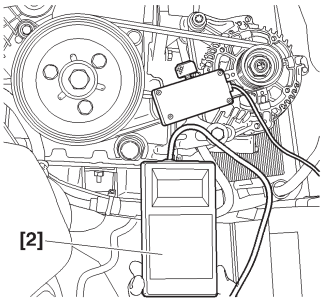


**Engine: KFU**

**Tools.**

**[1]** Plyers for removing plastic pegs **: 7504 –T**
**[2]** Belt tension measuring instrument (SEEM) **: 4122 –T**

**Removing.**
Raise and support the vehicle, front wheels hanging.
Disconnect the battery.
Remove the front RH wheel and the front RH splash-shield, using tool **[1]**.

**Vehicle without air conditioning.**

**Removing.**
Slacken the tension, screw **(2)**, screw **(3)** and screw **(1)**.
Push back the alternator towards the engine.
Remove the auxiliary equipment drive belt.

**Refitting.**
Refit the auxiliary equipment drive belt.
Respect the following sequence :
- Crankshaft pinion, alternator pulley.
- Position tool **[2]** on the belt. Tighten the screw **(1)** to tension the belt to
**55 ± 3 SEEM units.**
- Tighten screw **(3)**, screw **(2)**.
- Remove tool **[2].**
- Complete the refitting in the opposite order to removal.

B1BP2LSC | B1BP2LTC

| C3 | AUXILIARY EQUIPMENT DRIVE BELT |
|---|---|

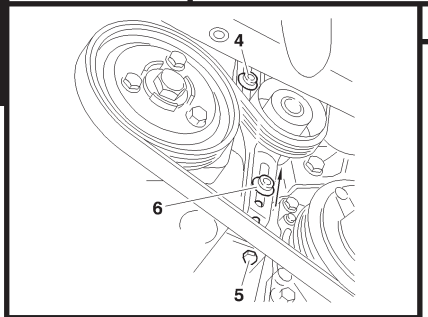


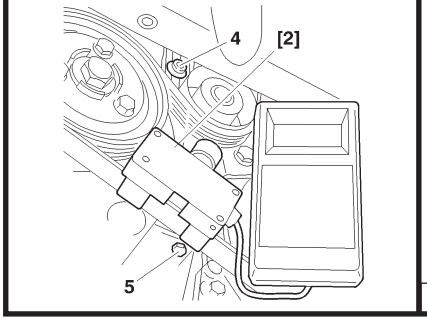


**Engine: KFU**

**<u>Vehicle With air conditioning.</u>**

**Removing.**

Slacken the tension, screw **(6)**, screw **(4)** and screw **(5)**.
Completely detension the belt by acting on the tensioner roller.
Remove the auxiliary equipment drive belt.

**Refitting.**

Refit the auxiliary equipment drive belt.
Respect the following sequence :
- Crankshaft pinion, aircon compressor pulley, alternator pulley guide roller and guide roller.
- Position tool **[2]** on the belt. Tighten the screw **(5)** to tension the belt to
**120 ± 3 SEEM units.**

Tighten screw **(4)**, screw **(6)**.
Remove tool **[2].**
Complete the refitting in the opposite order to removal.

| B1BP10VC | B1BP10XC |
|---|---|

# AUXILIARY EQUIPMENT DRIVE BELT 2002 — XSARA

**Engine: NFU**

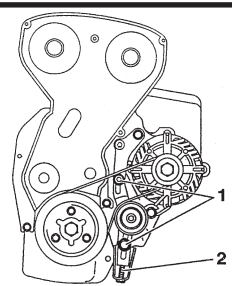


## Without air conditioning

**(1)** Tensioner roller fixing screw

**(2)** Tensioning screw

- New belt: **120 SEEM units.**
- Reused belt: 8**6.5 ± 3.5 SEEM units.**

B1BP1AMC

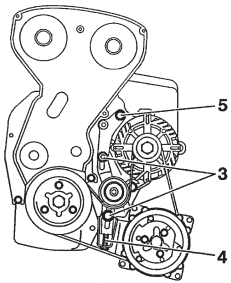


## With air conditioning

**(3)** Tensioner roller fixing screw

**(4)** Tensioning screw

- New belt: **120 SEEM units.**
- Reused belt: **86.5 ± 3.5 SEEM units.**

**NOTE:** Removal of the tensioner roller makes it necessary to remove the plate with the upper fixing screw (**5**).

B1BP1ANC

| XSARA | AUXILIARY EQUIPMENT DRIVE BELT 2002 |
|---|---|

**Engine: RFS**

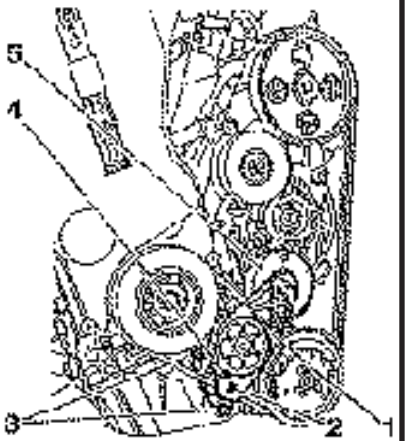


B1BP1HJC

**With air conditioning.**

- Fit the drive belt.

- The tensioner roller **(1)**.

- Tighten the screws **(3)** to **2 m.daN**.

- Move the tensioner roller **(1)** using the tool ***(9.52 mm square drive (3/8))*** at **(2)**, in order to remove the tool or locking peg ***(Ø 4 mm)*** at **(4)**.

- Slowly release the tensioner roller **(1)** so that the roller **(5)** presses against the belt.

# AUXILIARY EQUIPMENT DRIVE BELT 2002 — XSARA

## Engine: RFS

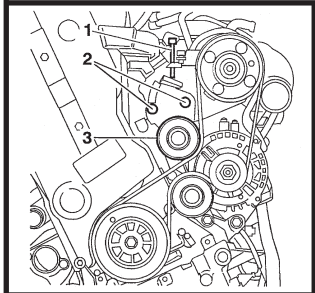


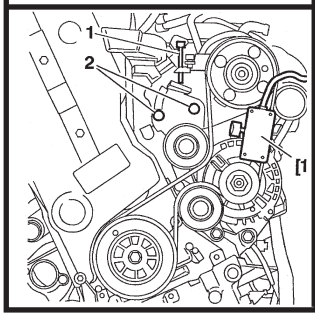


### Without air conditioning.

**Tools.**

**[1]** Belt tension measuring instrument : **4122-T**

**- (1)** Tensioning screw.
**- (2)** Roller support fixing screw **(3)**.

- Lightly tighten the screws **(2)**.
- Place the tool **[1]** on the belt.
- Tension the belt using the screw **(1)**.
  - Reused belt **90 SEEM units**.
  - New belt **120 SEEM units**.
- Tighten the screws **(2)** to **2 m.daN**.
- Remove the tool **[1]**.
- Rotate the crankshaft by 3 turns *(direction of rotation)*.
- Check the belt tension using the tool **[1]**, and adjust *(if necessary)*.

| B1EP12XC | B1EP12YC |
|---|---|

| XSARA - XSARA PICASSO | AUXILIARY EQUIPMENT DRIVE BELT 2002 |
|---|---|

**Without air conditioning.** | **Engines: 6FZ - RFN** | **With air conditioning.**

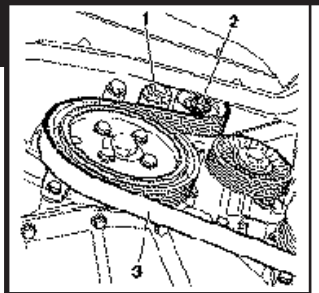


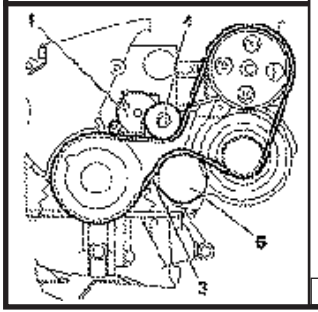


**Tools.**

**[1]** Pliers for removing plastic pegs : **7504-T**

**Remove the belt.**
- Detension the belt **(3)** by turning the screw **(2)** of the tensioner roller **(1)** *(anti-clockwise).*

- The screw **(2)** *(WARNING: not left hand screw).*
- Remove the belt **(3)**, while keeping the tensioner roller **(1)** tight.

**Refit the belt.**
- Refit the belt **(3)**, while keeping the tensioner roller **(1)** tight.
- Release the tensioner roller **(1)**.

B1BP23PC | B1BP23QC

B1BP23PC | B1BP23RC

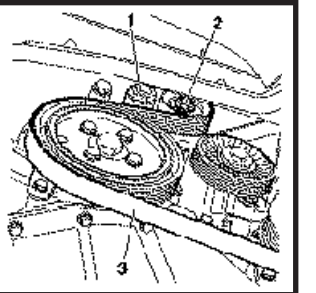


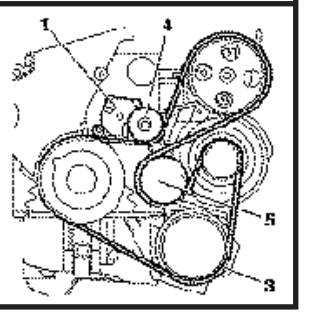

# AUXILIARY EQUIPMENT DRIVE BELT 2002 — XSARA

**Engine: WJY**

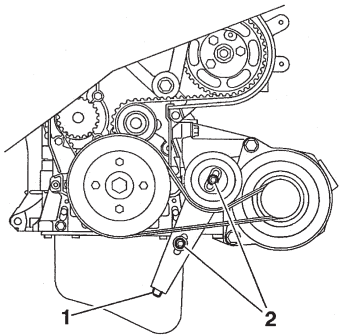


B1BP1SDC

**Sans Power-assisted steering.**

**Tools.**

**[1]** Belt tension measuring instrument **: 4122-T**

**Removal.**
- Loosen the screws **(2)**.
- Tighten the screw **(1)** until it is against its stop.
- Remove the belt.

**Refitting.**
- Refit the belt.
- Fit the tool **[1]** on the belt at **"d"**.
- Tighten the screw **(1)** to obtain: **106 ± 10 SEEM units.**
- Tighten the screws **(2)** to **2 m.daN**.
- Remove the tool **[1]**.

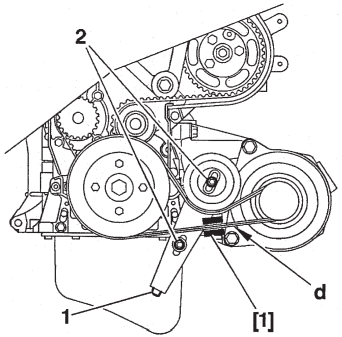


B1BP1SEC

| XSARA | AUXILIARY EQUIPMENT DRIVE BELT 2002 |
|---|---|

**Engine: WJY**

**Sans Power-assisted steering With air conditioning.**

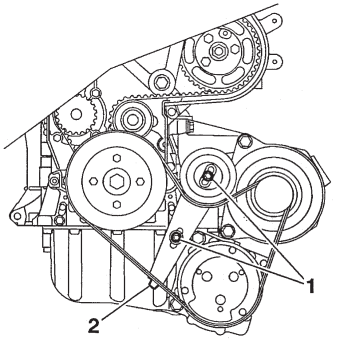


B1BP1SFC

**Tools.**

**[1]** Belt tension measuring instrument **: 4122-T**

**Removal.**
- Loosen the screws **(1)**.
- Tighten the screw **(2)** until it is against its stop.
- Remove the belt.

**Refitting.**
- Refit the belt.
- Fit the tool **[1]** at "**e**".
- Tighten the screw **(2)** to obtain: **106 ± 10 SEEM units.**
- Tighten the screws **(1)** to **2 m.daN**.
- Remove the tool **[1]**.

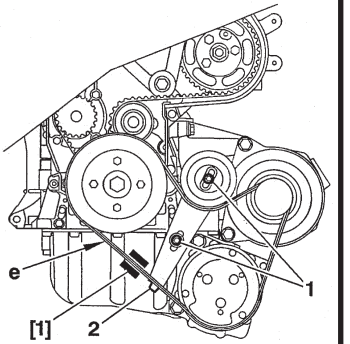


B1BP1SGC

# AUXILIARY EQUIPMENT DRIVE BELT 2002 — XSARA

**Engine: WJY**

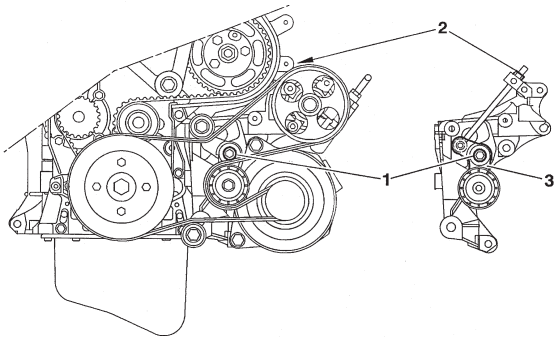


B1BP1SHD

**Power-assisted steering without air conditioning.**

**Tools.**

**[1]** Belt tension measuring instrument **: 4122-T**

**Removal.**

**WARNING: If the belt is to be reused, measure the tension before removal.**
Loosen:
- the screw **(1)**.
- the nut **(2)**.

**NOTE:** The tensioner arm **(3)** must be against the alternator.

- Remove the belt.

| XSARA | AUXILIARY EQUIPMENT DRIVE BELT |
|---|---|

**Engine: WJY**

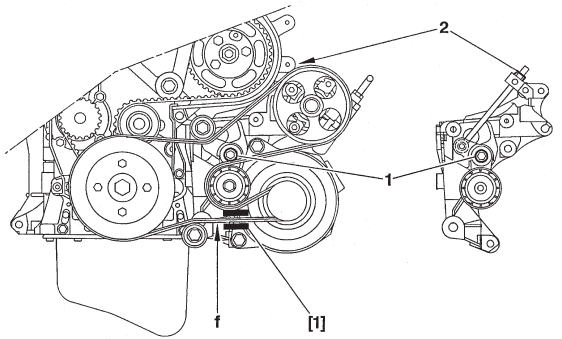


B1BP1SJD

**Power-assisted steering without air conditioning (continued).**

**Refitting.**
- Refit the belt.
- Place the tool **[1]** on belt at **"f"**.

**WARNING: Position tool [1], with the knob downwards.**
- Tighten the nut **(2)** to obtain a value of :

**Reused belt:**
Keep the value taken at removal.

**New belt:**
Tension should be **110 SEEM units**.
- Tighten the screw **(1)** to **9.5 m.daN**.
- Check belt tension, using tool **[1]**.

Tension should be **144 ± 3 SEEM units**.
- Remove the tool **[1]**.
- Start the engine and run it for **10 seconds**.
- Stop the engine.
- Place the tool **[1]** on the belt at **"f"**.
- Tension should be **130 ± 4 SEEM units**.
- Remove the tool **[1]**.

# AUXILIARY EQUIPMENT DRIVE BELT 2002 — XSARA

**Engine: WJY**

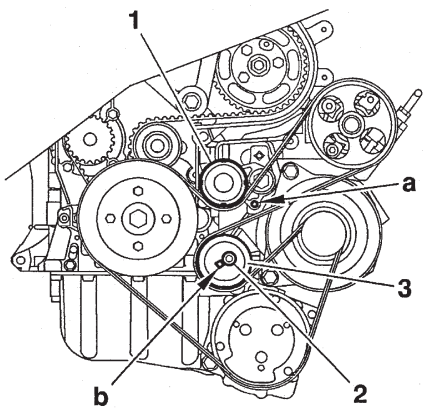


B1BP1SKC

**Power-assisted steering with air conditioning.**

**Tools.**

**[1]** Dynamic tensioner peg **: (-) 0188 H**
**[2]** Belt tension measuring instrument **: 4122-T**

**Removal.**
- Peg the dynamic tensioner **(1)** at **"a"**, using tool **[1]**.
- Loosen the screw **(2)** of the roller **(3)**.
- Turn the roller **(3)** backwards.
- Remove the belt.

**NOTE:** If it can not be pegged at **"a"**:
- Loosen the screw **(2)** of the roller **(3)**.
- Using a **7 mm** square drive, turn the roller **(3)** at **"b"**.
- Peg the tensioner **(1)** at **"a"**, using tool **[1]**.

**NOTE:** If the belt is broken:
- Support the engine using a jack *(insert a wooden block between the housing and the jack)*.
- Remove the right engine support.
- Using a square drive at **(b)** turn the tool **(3)** in the direction of the arrow **"a"**, so that it can be pegged at **"a"** using the tool **[1]**.

| XSARA | AUXILIARY EQUIPMENT DRIVE BELT 2002 |
|---|---|

**Engine: WJY**

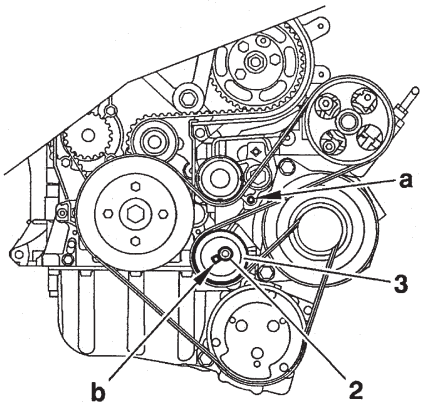


B1BP1SLC

**Power-assisted steering with air conditioning (continued).**

**Refitting.**

- Refit the belt.

- Using a **7 mm square** drive at **"b"**, turn the roller **(3)**, until the tool **[1]** located at **"a"** becomes free.

- Tighten the screw **(2)**.

- Remove the tool **[1]**.

# AUXILIARY EQUIPMENT DRIVE BELT



**With compressor and alternator.**

**Engines: 8HX - 8HW**

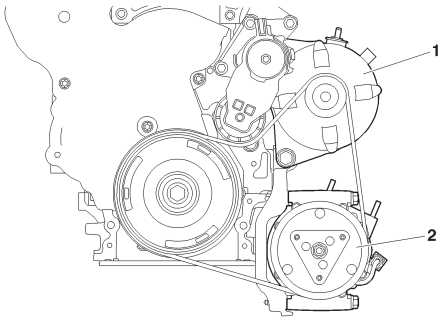


B1BP2MJD

**Tools.**

**[1]** Pliers for removing plastic pegs **: 7504-T**
**[2]** Tensioner roller compression lever **: (-).0194.E**
**[3]** Tensioner roller setting peg Ø4 mm **: (-).0194.F**

**Removing.**
Disconnect the battery negative cable.
Raise and support the vehicle, wheels hanging.
Remove the front RH wheel.
Move aside the splash-shield, using tool **[1]**.

**IMPERATIVE: In the case of belt re-use, mark the direction of rotation of the belt. If the index on the tensioner roller is outside the marks, change the auxiliary equipment drive belt.**

The alternator **(1)**.
The aircon compressor **(2)**.
Detension the auxiliary belt tensioner roller, using tool **[2]**.
Position the peg **[3]**.
Remove the auxiliary drive belt.

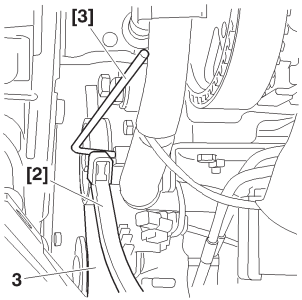


B1BP2MKC

# AUXILIARY EQUIPMENT DRIVE BELT

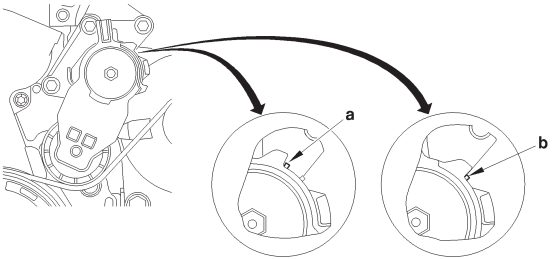


B1EP18UD

**Engines: 8HX - 8HW**

**Markings on the dynamic tensioner roller.**

**«a»** Position of «maximum wear» of the auxiliary drive belt.
**«b»** Normal position.

**Refitting.**

**NOTE:** Check that the tensioner roller moves freely *(no tight spot)*. If this is not the case, replace the tensioner roller.

Respect the direction of fitting of the drive belt.

Complete the setting of the belt, of both sides, by means of the tensioner roller. Make sure that the drive belt is correctly positioned in the **«V»** grooves of the various pulleys.

Move the tool **[2]** on the tensioner roller to remove the peg **[3]**.

# AUXILIARY EQUIPMENT DRIVE BELT 2002 — XSARA

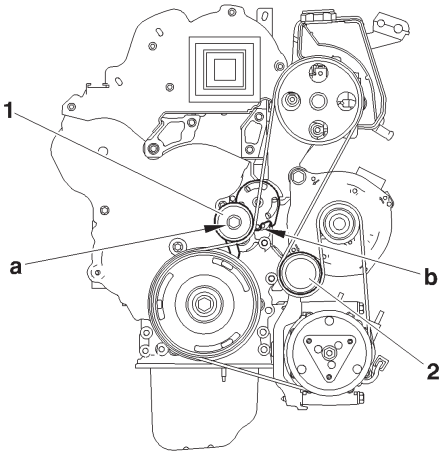


B1BP2VZD

**Engine: 8HZ**

**Tools.**

**[1]** Dynamic tensioner compression lever **: (-).0188.Z**
**[2]** Peg for dynamic tensioner roller **: (-).0194.F**

**Removing.**

**IMPERATIVE: Respect the safety and cleanliness requirements specific to high pressure diesel injection engines (HDi).**

Remove:
- The front RH wheel.
- The under-engine sounddeadening.
- The splash-shield.

**WARNING: Mark the direction of fitting of the accessories drive belt, if it is to be re-used.**

Compress the tensioner roller **(1)** by acting at **«a»** *(clockwise)*, using tool **[1]**.
Peg at **«b»**, using tool **[2]**.
Keeping the tensioner roller **(1)** compressed, remove the accessories drive belt.

**IMPERATIVE: Check that the rollers (1) and (2) can turn freely *(without play and without tight spots)*.**

# AUXILIARY EQUIPMENT DRIVE BELT 2002

**Engine: 8HZ**

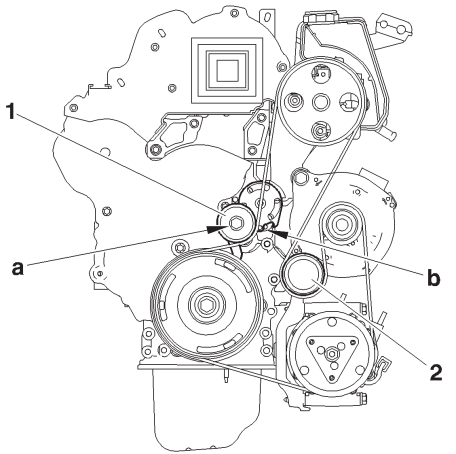


B1BP2VZD

**Refitting.**

**WARNING:** Belt to be re-used, mark the direction of fitting of the belt.

Refit the accessories drive belt.

Compress the tensioner roller **(1)** by acting at **«a»** *(clockwise)*, using tool **[1]**.

Remove tool **[2]**.

**IMPERATIVE: Make sure the belt is correctly positioned in the grooves of the various pulleys.**

Complete the refitting in the opposite order to removal.

# AUXILIARY EQUIPMENT DRIVE BELT

C3

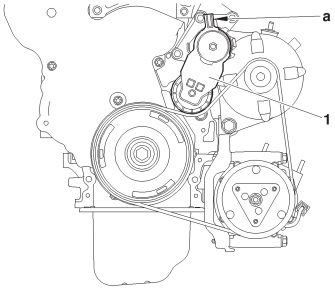


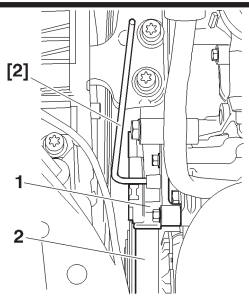


**Engines: 8HY - 8HV**

**Tools.**

| | |
|---|---|
| **[1a]** Dynamic tensioner roller lever | **: (-).0194-E1** |
| **[1b]** Lever extension | **: (-).0194-E2** |
| **[2]** Accessories belt roller locking peg **Ø 4 mm** | **: (-).0194-F** |

**Removing.**
Pivot the tensioner roller support **(1)** *(clockwise)*, using tools [**1a]** and **[1b]** at **«a»**.
Remove the belt.
Immobilise the support **(1)** of the tensioner roller, using tool **[2]**.
Remove the auxiliary drive belt **(2)**.

**IMPERATIVE: Ensure that the tensioner rollers turn freely *(no play, no tight spot).***

**Refitting.**
Refit the belt.
Move the tool **[1]** on the tensioner roller to remove the peg **[2]**.

**ESSENTIAL: Make sure that the belt is correctly positioned in the various pulley grooves.**

B1BP2MYD | B1BP2MZC

# AUXILIARY EQUIPMENT DRIVE BELT

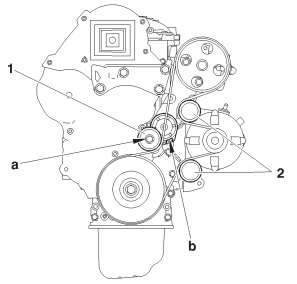


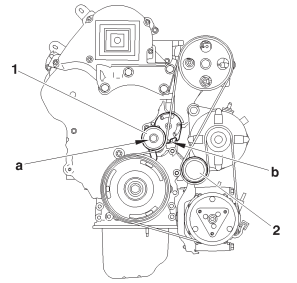


**Engines: 9HZ - 9HY**

**Tools.**

**[1]** Dynamic tensioner compression lever **: (-).0188.Z**
**[2]** Peg for dynamic tensioner roller **: (-).0194.F**

**Removing.**
Remove the front RH wheel, the under-engine sounddeadening and the splash-shield.

**Vehicle with air conditioning.**
**WARNING:** Mark the direction of fitting of the accessories drive belt, if it is to be re-used.
Compress the tensioner roller **(1)** by acting at **«a»** *(clockwise)*, using tool **[1]**.
Peg at **«b»**, using tool **[2]**.
Remove the accessories drive belt.
**IMPERATIVE: Check that the rollers (1) and (2) can turn freely *(without play and without tight spots).***

**Refitting.**
**WARNING:** Belt to be re-used, mark the direction of fitting of the belt.
Refit the accessories drive belt.
Compress the tensioner roller **(1)** by acting at **«a»** *(clockwise)*, using tool **[1]**.
Remove tool **[2]**.

**IMPERATIVE: Make sure the belt is correctly positioned in the grooves of the various pulleys.**

Complete the refitting in the opposite order to removal.

| B1BP2Z6D | B1BP2ZCD |
|---|---|

# AUXILIARY EQUIPMENT DRIVE BELT 2002

## XSARA - XSARA PICASSO

### Engines: RHY - RHZ

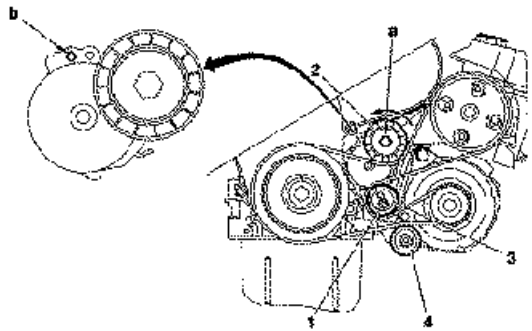


B1BP1YKD

### Without air conditioning.

**Tools.**

| | |
|---|---|
| **[1]** Belt tension adjusting square | **: (-).0188 J2** |
| **[2] Ø 4 mm** peg | **: (-).0188.Q1** |
| **[3] Ø 2 mm** peg | **: (-).0188.Q2** |
| **[4]** Dynamic tensioner compression lever | **: (-).0188.Z** |

**Removal.**
**Re-use of belt.**
**WARNING: Mark the direction the belt was fiited in case of re-use of the same belt.**

- Compress the tensioner roller **(2)** by action at «**a**» *(in anti-clockwise direction)*, tool **[4]**.
- Keep the tensioner roller **(2)** compressed and remove the belt.

**No re-use of belt.**

- Compress the tensioner roller **(2)** by action at «**a**» *(in anti-clockwise direction)*, tool **[4]**.
- Peg using tool **[2]**, at «**b**».
- Keep the tensioner roller **(2)** compressed and remove the belt.
- Loosen the screw **(1)**.

| XSARA - XSARA PICASSO | AUXILIARY EQUIPMENT DRIVE BELT 2002 |
|---|---|

**Engines: RHY - RHZ**

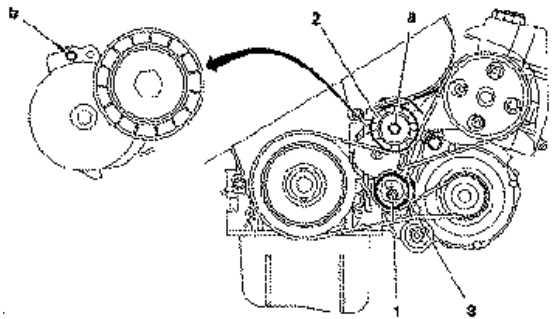


B1BP1YMD

**Without air conditioning (continued).**

**Refitting.**
**Re-used belt.**
- Compress the tensioner roller **(2)** by action at **«a»** *(in anti-clockwise direction)*, tool **[4]**.
- Refit the belt.

**WARNING: Respect the belt-fitting direction.**

Remove the tool **[4]**.

**New belt.**
- Refit the belt.
- Turn the eccentric roller **(3)**, tool **[1]** *(clockwise)* to free the tool **[2]** from its pegging at **«b»**.
- Hold the eccentric roller **(3)**, tool **[1]**, and tighten the screw **(1)** to **4.3 m.daN**.
- Remove the tool **[2]**.
- Rotate the crankshaft **4 times** in the direction of rotation.
- Check that it is possible to peg at **«b»**, tool **[3]**.
- If not possible to peg, restart the adjustment.

# AUXILIARY EQUIPMENT DRIVE BELT 2002

## XSARA - XSARA PICASSO

### Engines: RHY - RHZ

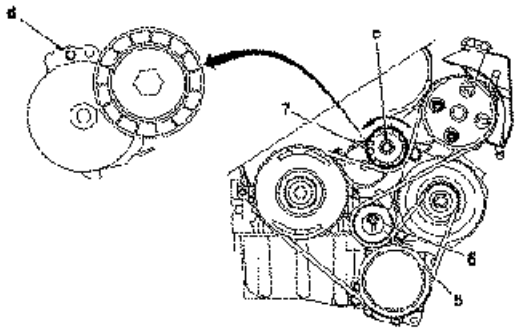


B1BP1YLD

### With air conditioning.

**Tools.**

| | |
|---|---|
| **[1]** Belt tension adjusting square | **: (-).0188 J2** |
| **[2] Ø 4 mm** peg | **: (-).0188.Q1** |
| **[3] Ø 2 mm** peg | **: (-).0188.Q2** |
| **[4]** Dynamic tensioner compression lever | **: (-).0188.Z** |

**Removal.**

**Re-use of belt.**

**WARNING: Mark the direction the belt was fitted in case of re-use of the same belt.**

- Compress the tensioner roller **(7)** by moving it at «**c**» *(in anti-clockwise direction)*, tool **[4]**.
- Hold the tensioner roller **(7)** compressed and remove the belt.

**No re-use of belt.**

- Compress the tensioner roller **(7)** by moving it at «**c**» *(in anti-clockwise direction)*, tool **[4]**.
- Peg using tool **[2]**, at «**d**».
- Loosen the screw **(6).**
- Bring the eccentric roller (5) towards the rear.
- Tighten the screw **(6)** by hand.
- Remove the belt.

**Engines: RHY - RHZ**

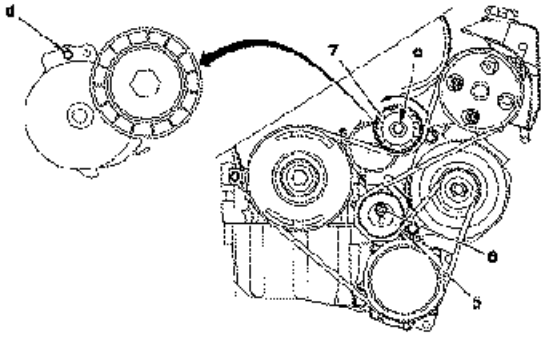


B1BP1YND

**With air conditioning (continued).**

**Refitting.**

**Re-used belt.**
- Compress the tensioner roller **(7)** by action at **«c»** *(in anti-clockwise direction)*, tool **[4]**.
- Refit the belt.

**WARNING: Respect the direction belt was fitted.**
Remove the tool **[4]**.

**New belt.**
- Refit the belt.
- Turn the eccentric roller **(5)**, tool **[1]** *(clockwise)* to free the tool **[2]** from its pegging at **«d»**.
- Hold the eccentric roller **(5)**, tool **[1]**, and tighten the screw **(6)** to **4.3 m.daN.**
- Remove the tool **[2]**.
- Rotate the crankshaft **4 times** in the direction of rotation.
- Check that it is possible to peg at **«d»**, tool **[3]**.
- If not possible to peg, restart the adjustment.

| CHECKING AND SETTING THE VALVE TIMING | | | | | | | | | PETROL |
|---|---|---|---|---|---|---|---|---|---|
| | TU | | | ET | TU | | EW | | XU |
| | 1 | 3 | | 3 | 5 | | 7 | 10 | |
| | JP | | | J4 | JP + | JP4 | J4 | | J4RS |
| Engine type | HFX | KFV | KFW | KFU | NFV | NFU | 6FZ | RFN | RFS |
| **C2** | 1.1i | 1.4i | | | | 1.6i 16V | | | |
| See pages: | 148 to 157 | | | | | 148 to 157 | | | |
| **C3** | 1.1i | 1.4i | | 1.4i 16V | | 1.6i 16V | | | |
| See pages: | 148 to 157 | | | 165 to 170 | | 148 to 157 | | | |
| **C3 Pluriel** | | 1.4i | | | | 1.6i 16V | | | |
| See pages: | | 148 to 157 | | | | 148 to 157 | | | |
| **XSARA** | | | 1.4i | | | 1.6i 16V | | 2.0i 16V | 2.0i 16V |
| See pages: | | | 148 to 157 | | | 161 to 164 | | 171 to 178 | 179 to 183 |
| **XSARA Picasso** | | | | | 1.6i | | 1.8i 16V | 2.0i 16V | |
| See pages: | | | | | 158 to 160 | | 171 to 178 | | |

| DIESEL | CHECKING AND SETTING THE VALVE TIMING | | | | | | | | | |
|---|---|---|---|---|---|---|---|---|---|---|
| | DV | | | | | | | DW | | |
| | 4 | | | | | 6 | | 8 | 10 | |
| | TD | | | TED4 | | | | B | TD | ATED |
| Engine type | 8HX | 8HW | 8HZ | 8HV | 8HY | 9HZ | 9HY | WJY | RHY | RHZ |
| C2 | 1.4 HDi | | | | | | | | | |
| See pages: | 184 to 191 | | | | | | | | | |
| C3 | 1.4 HDi | 1.4 HDi | | 1.4 HDi 16V | 1.4 HDi 16V | | | | | |
| See pages: | 184 to 191 | | | 192 to 200 | | | | | | |
| C3 Pluriel | 1.4 HDi | | | | | | | | | |
| See pages: | 184 to 191 | | | | | | | | | |
| XSARA | | | 1.4 HDi | | | | | 1.9 D | 2.0 HDi | 2.0 HDi |
| See pages: | | | 184 to 191 | | | | | 211 to 215 | 216 to 224 | |
| XSARA Picasso | | | | | | 1.6 HDi 16V | 1.6 HDi 16V | | 2.0 HDi | |
| See pages: | | | | | | 201 to 210 | | | 216 to 224 | |

| RECOMMENDATIONS: TIMING BELT | ALL TYPES |
|---|---|
| Petrol Engine | Diesel Engine |

## Recommendations.

**IMPERATIVE: After any repair involving removal of the timing belt, systematically replace:**

**The timing belt,**
**The tensioner roller fixing nut.**

# CHECKING AND SETTING THE VALVE TIMING

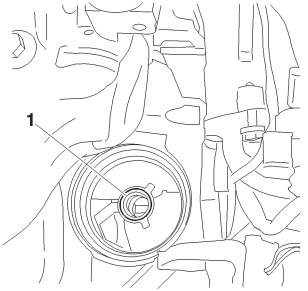


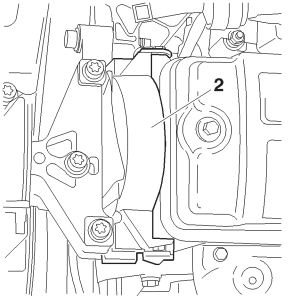


## Engines: HFX - KFV - NFU

**Tools.**

| | |
|---|---|
| **[1]** Engine flywheel peg | **: 4507-T.A** |
| **[2]** Camshaft pulley peg | **: 4507-T.B** |
| **[3a]** Camshaft peg | **: 4533-TA.C1** |
| **[3b]** Camshaft peg | **: 4533-TA.C2** |
| **[4]** Dynamic tensioner roller pin | **: 4200-T.H** |
| **[5]** Belt retaining pin | **: 4533-T.AD** |
| **[6]** Pliers for removing plastic pins | **: 7504-T** |

**Checking the valve timing.**

**Engines: HFX – KFV – NFU.**

Raise and support the front RH side of the vehicle.
Disconnect the battery positive terminal.
Engage 5th gear.
Remove the oil filter **(1)**.

**Engines: HFX – KFV.**

**Remove:**
- The timing top casing **(2)**.
- Turn the wheel to rotate the engine *(normal direction of rotation)*.
- Peg the camshaft pulley, using tool **[2]**.

B1BP2M7C | B1BP2M8C | B1BP2M9C

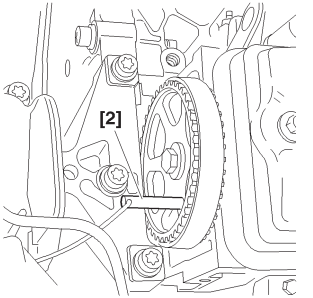

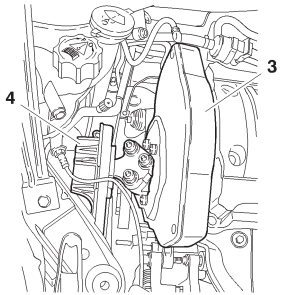


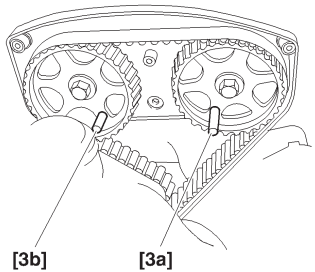


**Engine: NFU**

**Checking the timing (continued).**

**Engine: NFU.**

Place a jack under the engine, peg the engine.

Remove:
- The engine support **(4)** complete.
- The timing casing **(3)**.
- The sparking plugs *(eases engine rotation)*.

Turn the wheel to rotate the engine *(normal direction of rotation)*.
Position the pegs **[3a]** and **[3b]**.
Peg the flywheel, using tool **[1]**.
If the setting is not correct, recommence the operation.
Remove the tools **[1]**, **[2]**, **[3a]** and **[3b]**.
Complete the refitting.

B1BP2MAC | B1EP18MC | B1BP2MBC

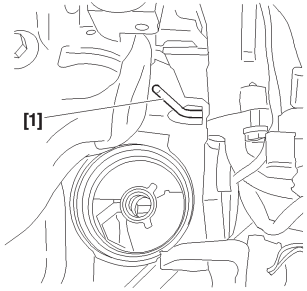

# CHECKING AND SETTING THE VALVE TIMING

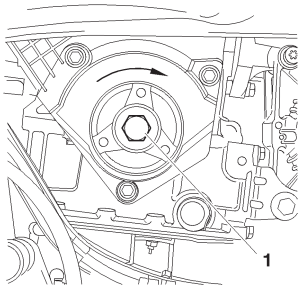


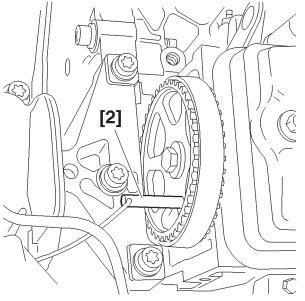


## Engines: HFX - KFV

**Setting the timing.**

**Preliminary operation.**

Lift and support the vehicle, wheels hanging.
Disconnect the battery.
Remove:
- The front RH wheel.
- The splash-shield, using tool **[6]**.
- The accessories belt *(See corresponding operation)*.
- The crankshaft pulley.
- The oil filter.

Place a jack under the engine, peg the engine.

**Removing.**

**Engines: HFX – KFV.**

Turn the engine by means of screw **(1)** *(normal direction of rotation)*.
Remove the timing casings.
Peg the camshaft pinion, using tool **[2]**.
Peg the flywheel, using tool **[1]**.
Remove:
- The fixing screws **(2)**.
- The upper engine support **(3)**.

B1BP2MCC | B1BP2M9C | B1BP2MBC | B1BP2MDC

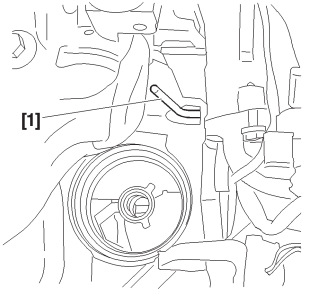


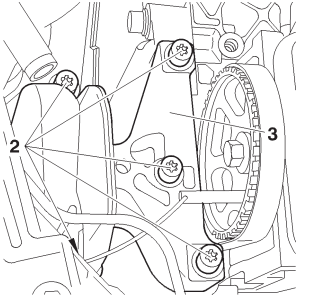

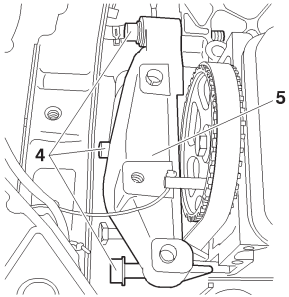


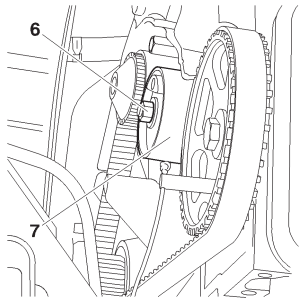


**Engines: HFX - KFV**

**Setting the timing (continued).**

**Engines: HFX – KFV.**

Slacken the screws **(4)** without removing them.

Remove the bottom engine support assembly **(5)**, and the fixing screws **(4)**.

Slacken the nut **(6)**.

Completely detension the belt by acting on the tensioner roller **(7)**.

Remove the timing belt.

**IMPERATIVE: Check that the tensioner roller turns freely *(no tight spot)*.**

B1BP2MEC | B1EP18NC

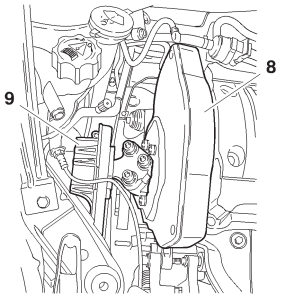


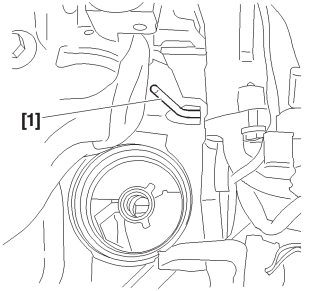


**Engine: NFU**

**Engine: NFU.**

**Setting the timing (continued).**

Remove:

- The bottom plastic casing.

- The engine support **(9)**.

- The middle support.

- The timing cover **(8)**.

- Peg the flywheel, using tool **[1]**.

- Position the tools **[3a]** and **[3b]**.

B1BP2MFC | B1BP2MBC | B1EP18MC

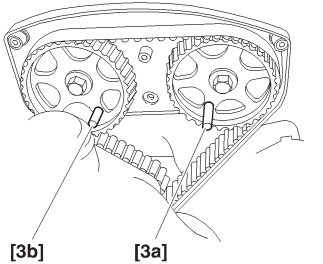

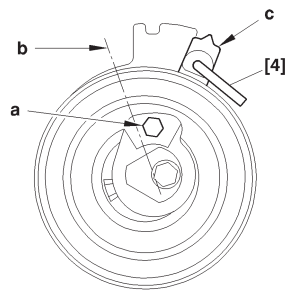


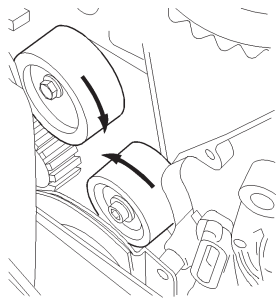

**Engine: NFU**

**Setting the timing (continued).**

**Engine: NFU.**

Slacken the tensioner roller.

Turn the tensioner roller so as to be able to position the tool **[4]**, with the aid of an Allen key placed at **«a»**.

Turn the tensioner roller towards the right to bring it to the index **«c»** in position **«b»**.

Peg the tensioner roller in this position in order to slacken the timing belt to the maximum.

**IMPERATIVE: Never make the dynamic tensioner roller turn by a complete rotation.**

Remove the timing belt **(8)**.

Check that the rollers **(9)** and **(10)** turn freely *(no tight spot).*

| B1EP18PC | B1EP18QC |
|---|---|

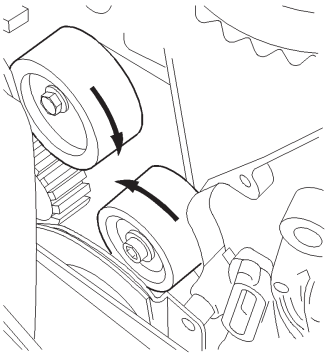

B1EP18QC

**Setting the timing (continued).**

**Engines: HFX-KFV.**

**Refit.**

**WARNING: Respect the direction of fitting of the belt *(the arrows «d» indicate the direction of rotation of the crankshaft)*.**

Refit the timing belt.

Position the timing belt, belt **«e»** well tensioned, in the following order:
- Crankshaft pinion, hold the belt using tool **[5]**.
- Camshaft pulley.
- Coolant pump pulley.
- Tensioner roller.

Remove the pegs **[1]** and **[2]**.

**Engines: KFX - KFV - NFU**

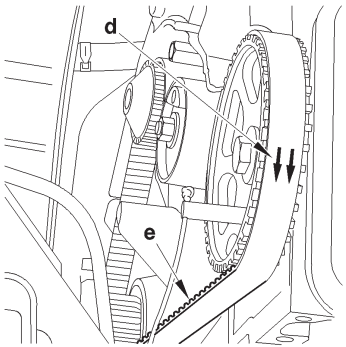


B1EP18RC

**Setting the timing (continued).**

**Engines: HFX-KFV.**

**Refitting.**

**NOTE:** Check that the pegs **[1]** and **[2]** are in place.

**WARNING:** Respect the direction of fitting of the timing belt, the arrows **«d»** indicate the direction of rotation of the crankshaft.

Refit the timing belt.

Position the timing belt, belt **«e»** well tensioned, in the following order:

Crankshaft pinion, hold the belt using tool **[5]**.

- Camshaft pulley.
- Coolant pump pulley.
- Tensioner roller.

Remove the tools **[1]**, **[2].**

**Engine: NFU.**

Fit the timing belt in position in the following order:

- Inlet camshaft pulley.
- Exhaust camshaft pulley.
- Guide roller.
- Crankshaft pulley.

Position tool **[5]**.

- Coolant pump pulley.
- Dynamic tensioner roller.

Remove the tools **[1]**, **[3]** and **[5]**.

# CHECKING AND SETTING THE VALVE TIMING

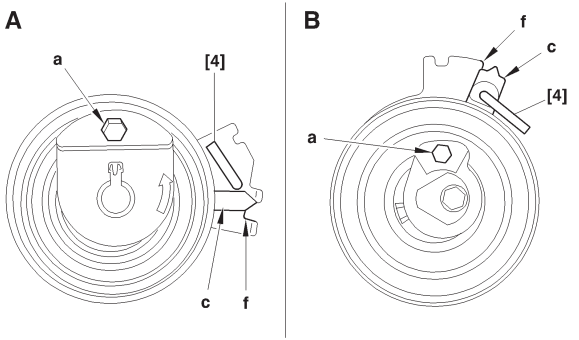


B1EP18SD

**Engine: NFU**

**Timing belt overtensioned.**

**A:** Engine: **HFX – KFV**.
**B:** Engine: **NFU**.

Turn the tensioner roller **(7)** with the aid of a hexagonal spanner at **«a»**.

Bring the index **«c»** to position **«f»**, to tension the belt to the maximum of the interval indicated.
Hold the tensioner roller **(7)**, using tool **[4]**.

Tighten the fixing nut of the tensioner roller, tightening to **1 ± 0,1 m.daN**.

Turn the crankshaft by **4 rotations** *(normal direction of rotation)*.

**IMPERATIVE: Never make the crankshaft rotate backwards.**

Make sure that the timing is correctly set by refitting the tools **[1]**, **[2]** and **[3]**.
Remove the tools **[1]**, **[2]** and **[3]**.

# CHECKING AND SETTING THE VALVE TIMING

## C2 - C3 - C3 PLURIEL

### Engines: HFX - KFV - NFU

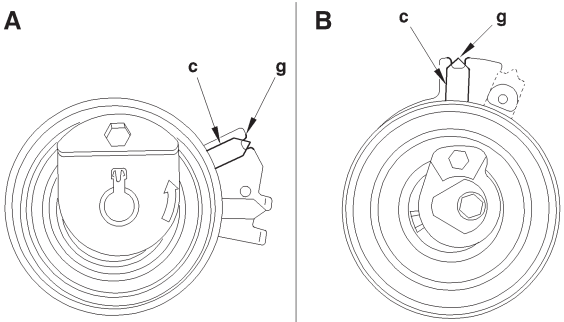


B1EP18TD

**Adjusting the fitting tension of the timing belt.**

**A:** Engine: **HFX – KFV.**
**B:** Engine: **NFU.**

Slacken the nut while maintaining the position of the tensioner roller, with the aid of a hexagonal spanner at **«a»**.
Next bring the index **«c»** to its adjusting position **«a»**.
The index **«c»** should not go beyond the notch **«g»**.

**WARNING:** The index **«c»** must not go beyond the notch **«g».** If it should do this, restart the timing belt tensioning operation.

Hold the tensioner roller **(7)** in this position, with the aid of a hexagonal spanner.
Tighten the tensioner roller fixing nut to :

| | |
|---|---|
| **2 ± 0.2 m.daN.** | ***(HFX - KFV engines)*** |
| **2.2 ± 0.2 m.daN**. | ***(NFU engine)*** |

**IMPERATIVE: The tensioner roller must not rotate during the tightening of its fixing. If it does, restart the timing belt tensioning operation.**
Complete the refitting.

# CHECKING AND SETTING THE VALVE TIMING

**Engines: KFW - NFV**

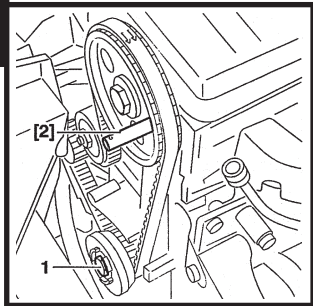


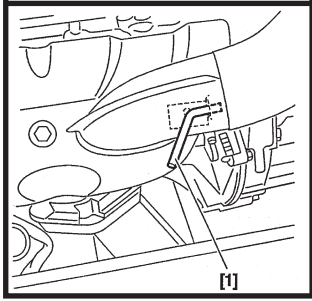


**Tools.**

| | | |
|---|---|---|
| **[1]** Flywheel peg | **: 4507-T.A** | **Tool kit 4507-T** |
| **[2]** Camshaft pulley peg | **: 4507-T.B** | |
| **[3]** Square | **: 4507-T.J** | |
| **[4]** Belt tension measuring instrument | **: 4122-T** | |
| **[5]** Valve rocker thrust plate | : **4533-T.Z** | |

**Checking the timing.**

- Peg the flywheel, using tool **[1]**.
- Peg the camshaft pulley, using tool **[2]**.

**Setting the timing.**

**NOTE:** Remove the sparking plugs, to ease rotation of the crankshaft.
- Rotate the engine by means of the crankshaft screw **(1)**.
- Peg the camshaft pinion.
- Peg the flywheel
- Slacken the nut **(2)**.
- Fullt detension the belt by acting on the tensioner roller.
- Remove the belt.

**IMPERATIVE: Check that the tensioner roller turns freely *(no tight spot)*.**

B1EP067C B1EP066C

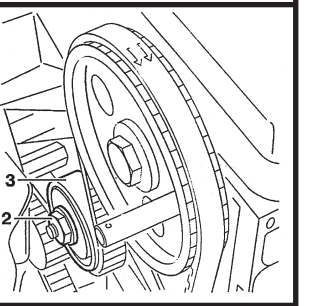


B1EP068C

# CHECKING AND SETTING THE VALVE TIMING

## XSARA - XSARA PICASSO

### Engines: KFW - NFV

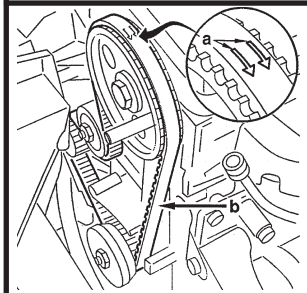


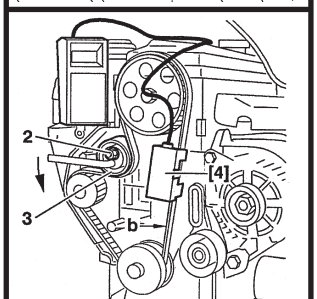


**Refitting the timing belt.**

**NOTE:** Check that the pegs **[1]** and **[2]** are in place.

**WARNING: Respect the direction of fitting of the belt: The arrows "a" indicate the direction of rotation of the crankshaft.**

Position:

-The timing belt, belt **"b"** well-tensioned, in the following order:
Crankshaft pinion, camshaft pulley, coolant pump pulley, tensioner roller.

- Tool **[5]** *(respect the direction of fitting relative to the valve timing)*.
- Put the tensioner roller in contact with the belt.
- Tighten the nut **(2)**.

**Pre-tensioning the belt.**

- Place tool **[4]** on the tensioned part **"b"** of the belt.
- Slacken the screw **(2)**.
- Turn the roller **(3)** in the anti-clockwise direction using the drive square, to obtain a value of: **44 SEEM units.**
- Tighten the nut **(2)** to **2 m.daN.**
- Remove tools **[1]**, **[2]** and **[4]**.
- Rotate the crankshaft **4 turns** in the normal direction of rotation.

**IMPERATIVE: Never turn the crankshaft backwards.**

B1EP069C | B1EP06AC

**Pre-tensioning the timing belt (continued).**

- Make sure of the timing setting by refitting the pegs **[1]** and **[2]**.
- Remove the valve cover.
- Position the tool **[5]** *(respect the direction of fitting relative to the valve timing).*

**Adjusting the belt tension.**

- Place tool **[4]** on the tensioned part of the belt.
- Slacken the nut **(2)**.
- Detension the belt, but too much.
- Tension the timing belt to obtain a value of: **31 ± 2 SEEM units**.
- Tighten the nut **(2)** to **2 m.daN**.
- Remove tools **[1]**, **[2]**, **[4]** and **[5]**.

**Checking the belt tension.**

- Rotate the crankshaft **2 turns** in the normal direction of rotation.
- Check that it is still possible to peg the following components.
- Flywheel.
- Camshaft.

**IMPERATIVE: Repeat the belt tensioning operation if the pegging is not possible.**

# CHECKING AND SETTING THE VALVE TIMING

XSARA

**Engine: NFU**

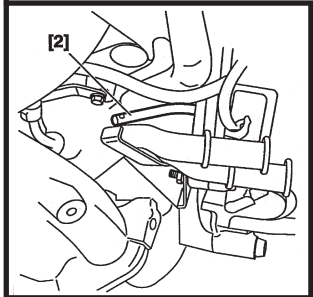


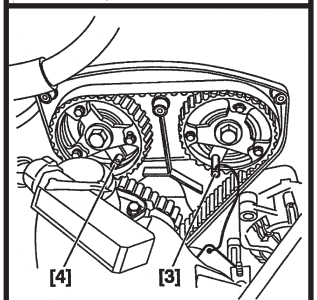


**Tools.**

| | | |
|---|---|---|
| **[1]** Belt tension measuring instrument | **: 4122 - T.** | |
| **[2]** Flywheel locating peg | **: 4507 - T.A** | **Tool kit 4507 - T** |
| **[3]** Camshaft pulley locating peg, exhaust | **: 4533 - T.A C2** | |
| **[4]** Camshaft pulley locating peg, inlet | **: 4533 - T.A C1** | |
| **[5]** Tensioning tool | **: 4707 - T.J** | |

**Checking the valve timing.**

- Peg the flywheel using the tool **[2]**.
- Peg the exhaust camshaft pulley **[3]**.
- Peg the inlet camshaft pulley **[4]**.

**Setting the valve timing.**

- Peg the flywheel using the tool **[2]**.
- Peg the camshaft pulleys **[3]** and **[4]**.

B1EP11BC | B1EP11CC

# CHECKING AND SETTING THE VALVE TIMING

**Engine: NFU**

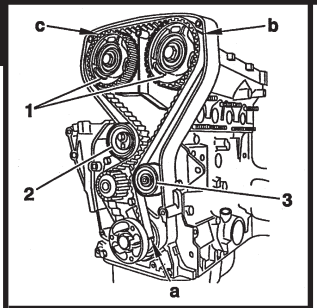


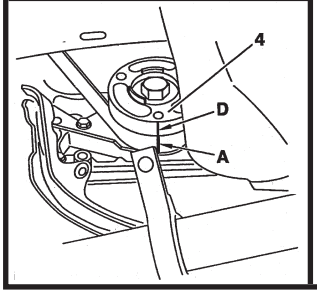


**Setting the valve timing.**

- Loosen the screw **(2)**, remove the belt.
- Loosen the six pulley screws **(1)** on the hubs
*(there should be a slight amount of friction between the screws and the pinions).*
- Check that the rollers **(2)** and **(3)** rotate freely.

**NOTE:** The belt bears three identification marks * **(a)**, **(b)** and **(c)**, facing its own teeth **(1)**, **(52)** and **(72)** respectively.

* *(Identification marks = white paint lines on the back of the belt facing the corresponding teeth).*

- Refit the belt.
- Line up mark **(A)** on the belt with groove **(D)** of the pinion **(4)**.
- Hold the belt against the pinion **(4)**.

B1EP11DC | B1EP11EC

# CHECKING AND SETTING THE VALVE TIMING

**XSARA**

**Engine: NFU**

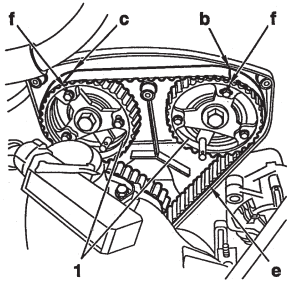


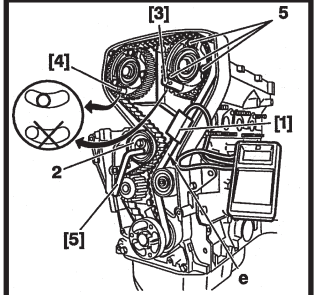


**Setting the valve timing.**

- Turn the two pulleys **(1)** clockwise to the end of the slots.
- With the belt strip **(e)** fully tensioned, place the belt over the pulley, first exhaust side, then inlet side, while ensuring that marks **(b)** and **(c)** on the belt are aligned with marks **(f)** on the pulleys.
- Hold the belt in this position, and engage it over the water pump pinion and the tensioner roller.

- Fit the tool **[1]** on the belt at **(e)**.
- Rotate the roller **(2)** *(using tool [5])* in an anti-clockwise direction, to obtain: **63 SEEM units**.
- Tighten the roller **(2)** to **2 m.daN**.
- Tighten the six screws **(5)** to **1m.daN**.

**ESSENTIAL: Check that:**
**- The camshaft pulleys (1) are not at the end of the slots *(by removing a screw)*.**
- The markings on the belt are aligned with the markings on the crankshaft and camshaft pulleys.

If not, repeat the setting procedure.

B1EP11FC | B1EP11GC

**Setting the valve timing.**

- Remove the tools **[1]**, **[2]**, **[3]** and **[4]**.
- Rotate the engine by **4 turns** in the normal direction *(do not turn backwards)*.
- Peg the flywheel **[2]**.
- Loosen the **six screws (5)**, while ensuring there is still a slight amount of friction with the pulley.
- Peg the camshaft hubs using pegs **[3]** and **[4]**.

**WARNING: In certain cases, it may be necessary to slightly turn the camshaft using the hub fixing screw.**

- Fit the tool **[1]**.
- Loosen the tensioner roller screw **(2)**.
- Rotate the roller **(2)** *(using tool [5])* in an anti-clockwise direction to obtain: **37 SEEM units**.
- Tighten the tensioner roller screw **(2)** to **2 m.daN**.
- Tighten the **six pulley screws (1)** to **1m.daN**.
- Remove the tools.

# CHECKING AND SETTING THE VALVE TIMING

C3

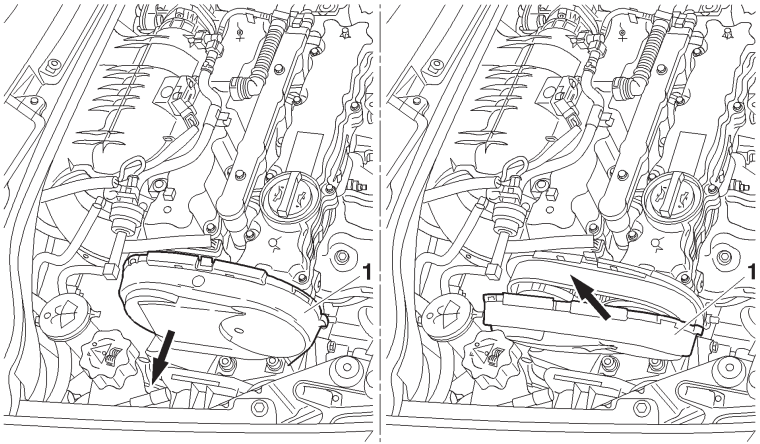


B1BP2ZJD

**Engine: KFU**

**Tools.**

| | |
|---|---|
| **[1]** Flywheel peg | : **4507-T** |
| **[2]** Camshaft peg | **: 4533-TA.C1** |
| **[3]** Crankshaft setting peg | **: (-).0194.A** |

**Checks.**

Raise and support the vehicle, front wheels hanging.
Disconnect the battery.
Remove:
- The oil filter.
- The engine cover.
- The upper timing cover **(1)**.
- The sparking plugs, to ease rotation of the engine.

Rotate the engine by means of the crankshaft screw *(never turn the engine backwards).*

| C3 | CHECKING AND SETTING THE VALVE TIMING |
|---|---|

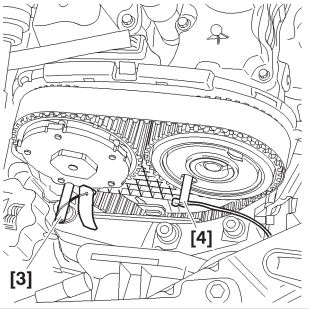


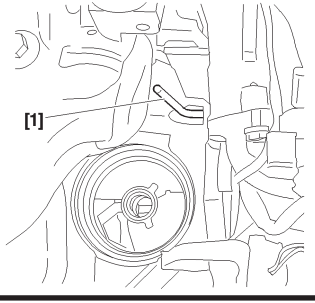


**Engine: KFU**

Position the tools **[3]** and **[2]**.

Peg the flywheel, using tool **[1]**.

**NOTE:** If the setting is not correct, recommence the operation.

Remove the pegs **[2]** and **[3]**.

Refit :

- The oil filter.
- The timing cover **(1)**.
- The engine cover.

Reconnect the battery.
Lower the vehicle.
Perform the operations that are necessary following a reconnection of the battery.

| B1BP2ZTC | B1BP2MBC |
|---|---|

# CHECKING AND SETTING THE VALVE TIMING

C3

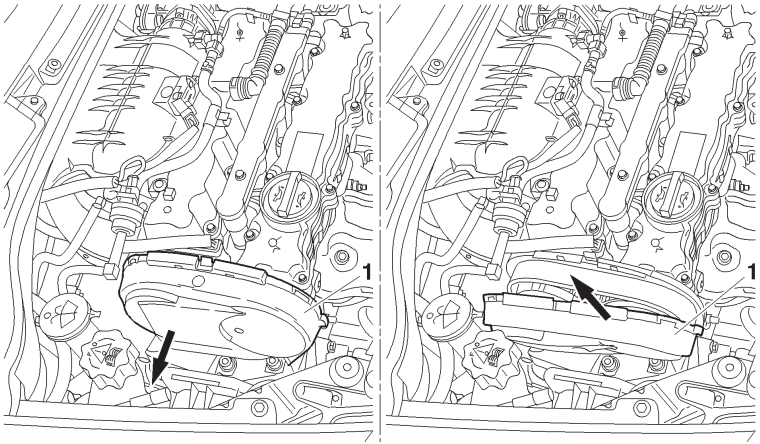


B1BP2ZJD

## Engine: KFU

### Tools.

| | |
|---|---|
| **[1]** Flywheel setting peg | **: 4507-T** |
| **[2]** Engine support crossmember | **:** |
| **[3]** Crankshaft setting peg | **: (-).0194.A** |
| **[4]** Camshaft peg | **: 4533-TA.C1** |
| **[5]** Belt retaining pin | **: 4533-T.AD** |

### Removing.

Raise and support the vehicle, front wheels hanging.
Disconnect the battery.
Remove:
- The front RH wheel.
- The front RH splash-shield.
- The engine cover.
- The accessories drive belt *(see corresponding operation)*.
- The crankshaft pulley.
- The oil filter.

Remove the upper timing cover **(1)**.

| C3 | CHECKING AND SETTING THE VALVE TIMING |
|---|---|

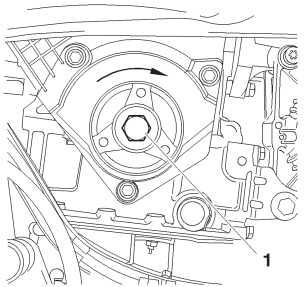


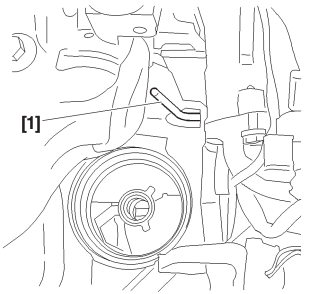


**Engine: KFU**

Rotate the engine by means of the crankshaft pinion screw **(2)** *(clockwise)*, to bring it to the pegging position.

Peg the flywheel, using tool **[1]**.

Position the tools **[3]** and **[4]**.

Position the tool **[2]**.

Support the engine.

Remove the screws **(3)**.

The upper RH engine support.

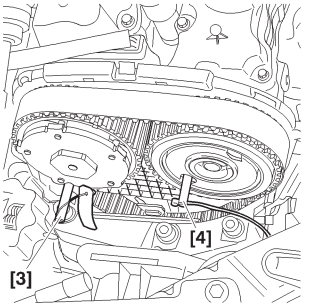


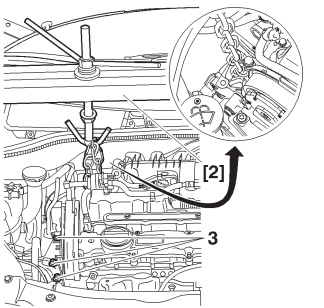


| B1BP2MCC | B1BP2MBC | B1BP2ZTC | B1BP2ZUC |
|---|---|---|---|

# CHECKING AND SETTING THE VALVE TIMING

C3

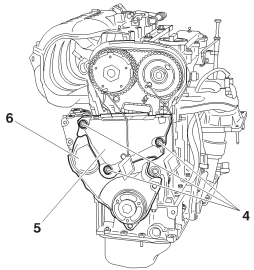


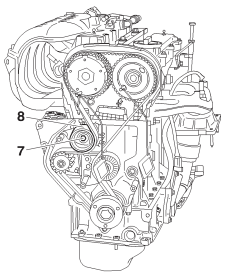


**Engine: KFU**

Remove:
- The lower engine support assembly **(5)** and the fixing screw **(4)**.
- Remove the lower timing cover **(6)**.
- Slacken the nut **(7)**.
- Remove the timing belt.

**IMPERATIVE: Check that the tensioner roller turns freely *(no tight spot)*.**

**Refitting.**

Fit the *(new)* timing belt, in the following sequence:
- Inlet camshaft pulley.
- Exhaust camshaft pulley.
- Guide roller.
- Crankshaft pulley.

Position the tool **[5]**.
Coolant pump pulley.
Dynamic tensioner roller.
Remove tools **[3]**, **[4]** and **[5]**.

B1CP0F1D | B1CP0F2D

| C3 | CHECKING AND SETTING THE VALVE TIMING |
|---|---|

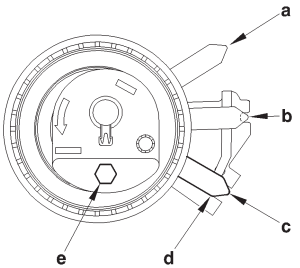


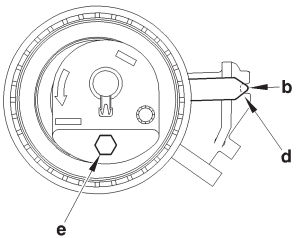


**Engine: KFU**

**Overtensioning the belt.**
Position «**a**» Tensioner roller in slackened position.
Position «**b**» Tensioner roller in normal position.
Position «**c**» Tensioner roller in overtensioned position.
Turn the tensioner roller **(8)** using an allen spanner at «**e**».
Position the index «**d**» in position «**c**», tension the belt to the maximum indicated.
Tighten the fixing nut of the tensioner roller to **2,1 ± 0,2 m.daN**.
Rotate the crankshaft by **4 turns** *(normal direction of rotation).*
**IMPERATIVE: Never turn the crankshaft backwards.**
Make sure the timing setting is correct by refitting the pegs **[1]**, **[3]** and **[4]**.
Remove the pegs **[1]**, **[3]** and **[4]**.
Adjusting the tension of the belt.
Slacken the nut, holding the position of the tensioner roller, by means of an allen spanner at «**e**».
Then bring the index «**d**» to its adjustment position «**b**».
**WARNING:** The index «**d**» should not go past the notch «**b**». If it should do so, repeat the operation to tension the timing belt.
Maintain the tensioner roller **(8)** in this position, using the allen spanner.
Tighten the fixing nut of the tensioner roller to **2,1 ± 0,2 m.daN**.
**IMPERATIVE: The tensioner roller should not turn during the tightening of its fixing. If it should do so, repeat the operation to tension the timing belt.**
Refitting.
Complete the refitting in the opposite order to removal.

| B1EP1DTC | B1EP1DUC |
|---|---|

# CHECKING AND SETTING THE VALVE TIMING

## XSARA - XSARA PICASSO

***NEW ASSEMBLY*** **2003 ➔**

**Engines: 6FZ - RFN 2003 ➔**

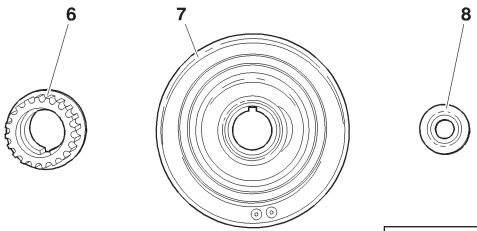


B1EP1B9D

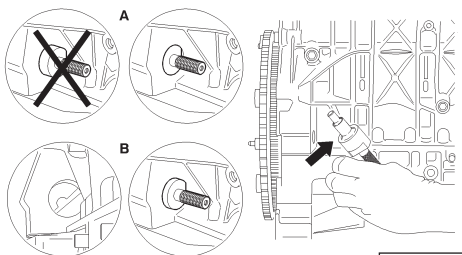


B1BP2V2D

**(6)** Crankshaft pinion
**(7)** Accessories drive pulley
**(8)** Washer
**(9)** Screw
The pinion **(6)** is fitted as an idler on the crankshaft.
The accessories drive pulley **(7)** is immobilised on the crankshaft by a half-moon keyway and by the tightening of washer **(8)** and screw **(9)**.
**A:** Pegging on manual gearbox.
**B:** Pegging on automatic gearbox.

The pegging of the crankshaft is done on the flywheel, or on the converter drive plate *(automatic gearbox)*.
The pegging hole on the cylinder block *(exhaust end)* is calibrated and reinforced.

**IMPERATIVE: Never turn the crankshaft with the accessories drive pulley slackened.**

**IMPERATIVE: Never remove the accessories drive pulley without pegging the crankshaft and the camshafts.**

**IMPERATIVE: Always turn the crankshaft in the direction of engine rotation.**

**NOTE: Checking and setting the timing → 2003: See Mechanic's Handbook 2003: pages 163 to 173.**

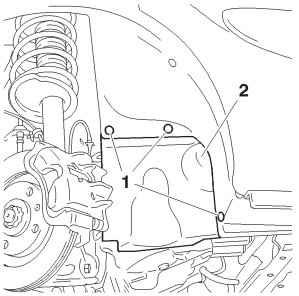


C4AP12TC

**Engines: 6FZ - RFN 2003 →**

**Tools.**

| | |
|---|---|
| **[1]** Camshaft setting peg | **: (-) 0189.A** |
| **[2]** Crankshaft setting peg | **: (-).0189.R** |
| **[3]** Timing belt retaining pin | **: (-).0189.K** |
| **[4]** Adaptor for angular tightening | **: 4069-T** |
| **[5]** Tool for moving and locking the tensioner roller | **: (-).0189.S** |
| **[5a]** | **: (-).0189.S1** |
| **[5b]** | **: (-).0189 S2** |
| Pliers for removing plastic pins | **: 7504-T** |

**Checking the setting of the timing.**

**Removing.**

Disconnect the battery negative terminal *(see corresponding operation)*.

Raise and support the vehicle, front wheels hanging.

Remove:

- The front RH wheel.
- The plastic pins **(1)**.
- The splash-shield **(2)**.
- The upper timing cover.

Engines: 6FZ - RFN 2003 ➔

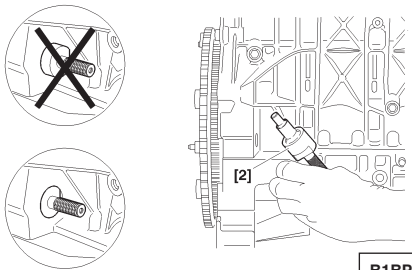


B1BP2V3D

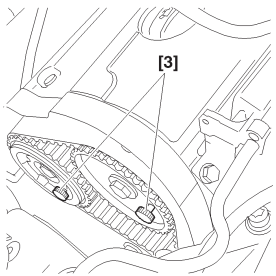


B1EP1BAC

**Checking the setting of the timing (continued).**

**A:** Pegging on the manual gearbox.
**B:** Pegging on the automatic gearbox.

Turn the engine by means of the crankshaft pinion screw, to bring it to the pegging position.
Peg the crankshaft, using tool **[2]**.
Peg the camshaft pulleys, using tool **[3]**.

**NOTE:** The pegs **[3]** should go in without effort.

**WARNING:** If the pegs go in only with difficulty, repeat the operation for fitting and tensioning the timing belt ***(see corresponding operation).***

**Refitting.**

Remove tools **[2]** and **[3]**.

Complete the refitting in reverse order to removal.

**Engines: 6FZ - RFN 2003 ➔**

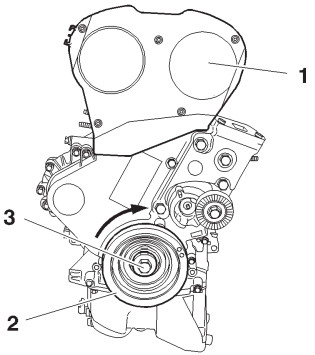


B1BP2V4C

**Setting the timing.**

**Removing.**
Disconnect the battery negative terminal *(see corresponding operation)*.
Raise and support the vehicle, front wheels hanging.
Remove:
- The front RH wheel.
- The plastic pins **(1)**.
- The splash-shield **(2)**.
- The accessories drive belt *(see corresponding operation)*.

Unclip and move aside the fuel delivery hose from the timing cover.

Remove the upper timing cover **(1)**.

Turn the engine by means of the screw **(3)** of the crankshaft pulley **(2)** to bring it to the pegging position.

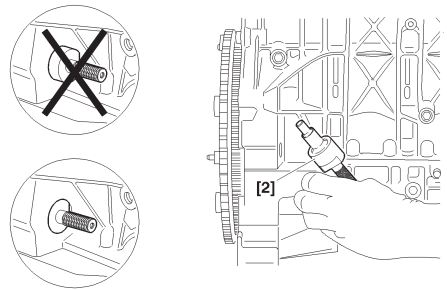


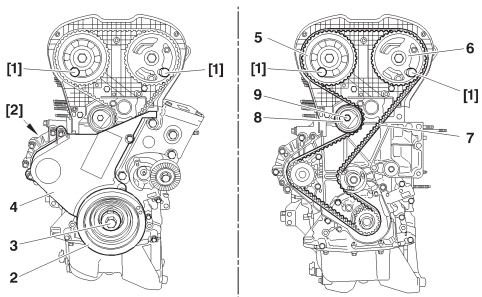


**Engines: 6FZ - RFN 2003 ➔**

**Setting the timing (continued).**

**A:** Pegging on the manual gearbox.
**B:** Pegging on the automatic gearbox.

Peg:
- The crankshaft, using tool **[2]**.
- The camshaft pulleys **(5)** and **(6)**, using tool **[1]**.

Remove:
- The screw **(3)** of the crankshaft pulley **(2)**.
- The lower timing cover **(4)** *(by moving the engine)*.

**IMPERATIVE: Never remove the crankshaft pulley (2) without pegging the crankshaft and the camshafts.**

Slacken the screw **(9)** of the tensioner roller **(8)**.
Turn the tensioner roller **(8)** *(clockwise)*.
Remove the timing belt **(7)**.

**IMPERATIVE: Systematically replace the following components: timing belt, exhaust manifold fixing nuts, timing belt tensioner roller nut.**

B1BP2V3D | B1EP1BBD

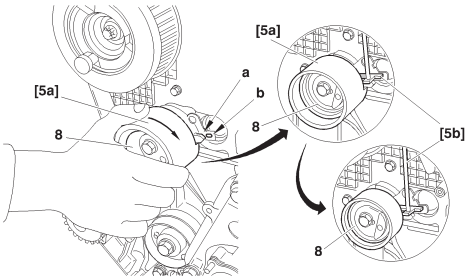


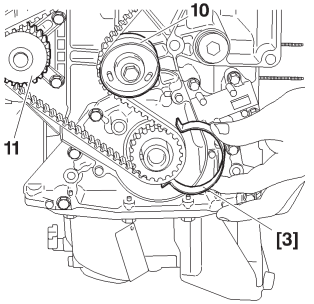


**Engines: 6FZ - RFN 2003 ➔**

**Setting the timing (continued).**

Turn the tensioner roller **(8)**, using tool **[5a]** to go beyond slot **«b»**.
Position the tool **[5b]** to lock the index **«a»** and remove the tool **[5a]**.
Reposition the timing belt **(7)** on the crankshaft pulley.
Hold the timing belt **(7)** in place using tool **[3]**.
Fit the timing belt **(7)** in place, respecting the following order:
- Guide roller **(10)**.
- Inlet camshaft pulley **(6)**.
- Exhaust camshaft pulley **(5)**.
- Coolant pump **(11)**.
- Tensioner roller **(8)**.

**NOTE:** Make so that the belt **(7)** is as flush as possible with the exterior face of the various pinions and rollers.
Remove:
- Tool **[3]**.
- Tool **[1]** from the exhaust camshaft pulley.
- Tool **[5b]** from the tensioner roller **(8)**.

Refit:
- The lower timing cover **(4)** *(by moving the engine).*
- The crankshaft pulley **(2)**.

Screw **(3)** of the crankshaft pulley
Tighten screw **(3)** to **4 ± 0,4 m.daN**, then angular tighten to **53° ± 4°**, tool **[4]**.

| B1EP1BCD | B1EP1BDC |
|---|---|

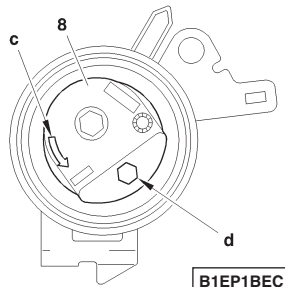


B1EP1BEC

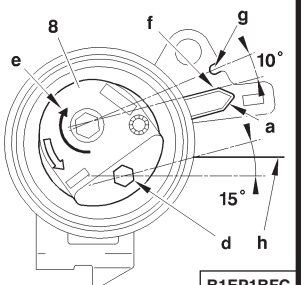


B1EP1BFC

**Engines: 6FZ - RFN 2003 ➔**

**Tensioning the timing belt.**

Turn the tensioner roller **(8)** in the direction of the arrow **«c»**, by means of a hexagonal spanner at **«d»**.
Positionner l'index **«a»** en position **«f»**.

**IMPERATVE: The index «a» should go past the slot «g» by an angular value of 10°.**

If it does not, replace the tensioner roller or the timing belt and tensioner roller assembly.
Next bring the index **«a»** to its adjusting position **«g»**, by turning the tensioner roller in the direction of the arrow **«e»**.

**WARNING:** the index **«a»** should not pass the slot **«g»**.
Otherwise, repeat the operation to tension the timing belt.

**IMPERATIVE: The tensioner roller should not turn during the tightening of its fixing.**
**If it does, repeat the operation to tension the timing belt.**

Tighten the screw **(9)** of the tensioner roller **(8)** to **2,1 ± 0,2 m.daN**.

**IMPERATIVE: The hexagonal tensioner roller drive should be approx. 15° below the level of the cylinder head gasket «h».**
**If it is not, replace the tensioner roller or the timing belt and tensioner roller assembly.**

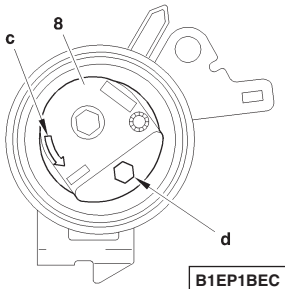


B1EP1BEC

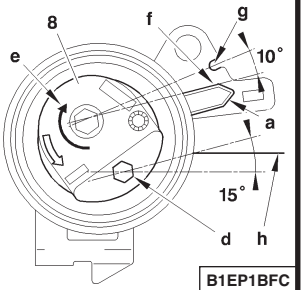


B1EP1BFC

**Engines: 6FZ - RFN 2003 →**

**Refitting (continued).**

Remove the tools **[1]** and **[2]**.
Rotate the crankshaft ten times *(normal direction of rotation)*.

**IMPERATIVE: No pressure or outside force should be brought to bear on the timing belt.**

Peg the inlet camshaft pulley, using tool **[1]**.

**Checks.**

Tension of the timing belt.

**ESSENTIAL: Check the position of the index «a», which should be opposite the slot «g».**
**If the position of the index «a» is not correct, repeat the operations to tension the timing belt.**

Refit the upper timing cover **(1)**.
Clip the fuel delivery hose on the timing cover.
Refit the accessories drive belt *(see corresponding operation)*.
Lower the vehicle.
Reconnect the battery *(see corresponding operation)*.

# CHECKING AND SETTING THE VALVE TIMING

XSARA

**Engine: RFS**

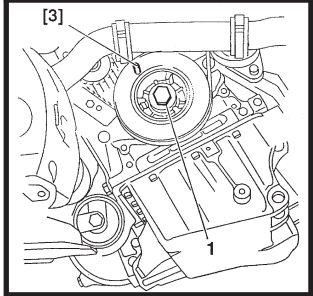


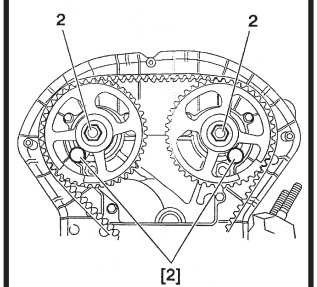


**Tools.**

| | | |
|---|---|---|
| **[1]** Belt tension measuring instrument | **: 4122-T** | |
| **[2]** Camshaft pulley locating peg | **: 9041-T.Z** | **Tool kit 7004-T** |
| **[3]** Crankshaft locating peg | **: 7014-T.N** | |
| **[4]** Camshaft pulley locking peg | **: 4200-T.G** | |
| **[5]** Tensioner spanner | **: 7017-T.W** | |
| **[6]** Toothed sector for locking the flywheel | **: 9044-T** | |

**Checking the setting.**

- Turn the engine by the crankshaft screw **(1)**.
- Peg the crankshaft using the tool **[3]**.

**ESSENTIAL: Check that the crankshaft DAMPERS pulley is in good condition. If the hub/pulley markings do not line up, the crankshaft pulley must be replaced.**

- Peg the camshaft using the tool **[2]** *(the locating pegs **[2]** should slide in easily)*.
- If this is not the case, set the timing.

**NOTE:** Camshaft hubs *(see pages **138** and **139**)*.

B1EP12FC | B1EP12GC

# CHECKING AND SETTING THE VALVE TIMING

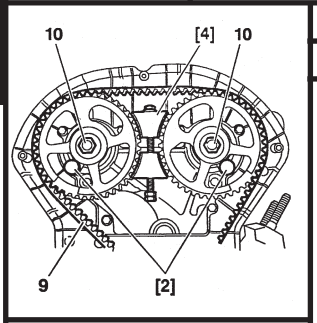


## Engine: RFS

### Setting the valve timing.

- Peg the crankshaft using tool **[3]**.
- Peg the camshaft pulleys using tool **[2]**.
- Lock the flywheel using the tool **[6]**.

**Refit:**

- The pulley **(5)**.
- The screw **(4)** *(tighten moderately)*.
- The peg **[3]**.

**Remove:**

- The peg **[3]**.
- The screw **(4)** *(brush the screw thread)*.
- The pulley **(5)**.
- The lower cover **(6)**.

Remove:

- The tool **[6]**.
- The studs **(8)**.
- Fit the tool **[4]**.
- Loosen the screws **(10)**.
- Remove the tool **[4]**.
- Slacken the tensioner roller **(7)**.
- Remove the belt **(9)**.

B1EP120C | B1EP11ZC

# CHECKING AND SETTING THE VALVE TIMING

XSARA

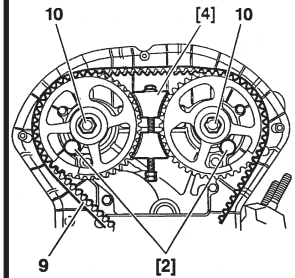


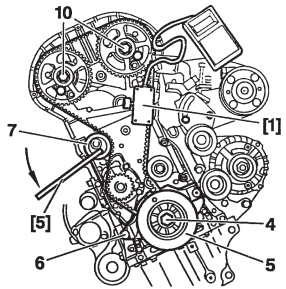


## Engine: RFS

### Pretensioning the timing belt.

- Peg the crankshaft using the tool **[3]**.
- Peg the camshaft pulleys using the tool **[2]**.

**NOTE:** Ensure that the camshaft pulleys rotate freely on the hubs. Clean the contact faces of the pulleys and hubs.

- Turn the camshaft pulleys in a clockwise direction to bring them to the end of the slots.
- Fit the belt **(9)**.
- Fit the tool **[1]**.
- Turn the roller **(7)** using the tool **[5]**.
- Pre-tension to: *(Pulleys slackened)*.

| Engine | RFS |
|---|---|
| New belt | 55 SEEM units |

- Tighten the screws of the roller **(7)** to **2 m.daN**.
- Fit the tool **[4]**.
- Tighten the screws **(10)** to **4 m.daN**.
- Remove the tools.
- Rotate the crankshaft by **six turns** *(normal direction of rotation)*.

B1EP12OC | B1EP121C

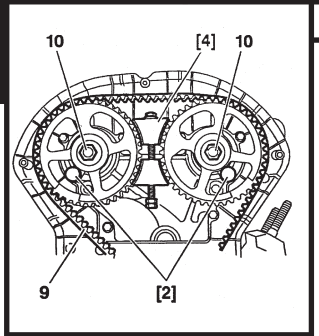


**Engine: RFS**

**Tensioning the timing belt.**

- Peg the crankshaft using the tool **[3]**.
- Peg the camshaft pulleys using the tool **[2]**.

**NOTE:** If it is not easy to peg the camshaft hubs, loosen the tensioner roller **(7)**, and turn the camshafts using the screw **(10)**.

- Fit the tool **[4]**.
- Loosen the screws **(10)**.
- Remove the tool **[4]**.
- Loosen the tensioner roller **(7)**.
- Fit the tool **[1]** to the belt.
- Turn the roller **(7)** using the tool **[5]**.

B1EP120C | B1EP121C

# CHECKING AND SETTING THE VALVE TIMING

XSARA

## Engine: RFS

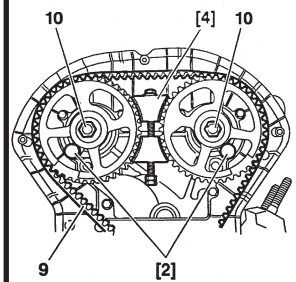


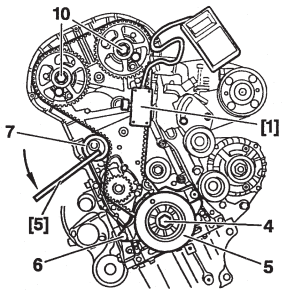


- Tension to: *(Pulleys slackened)*.

| Engine | RFS |
|---|---|
| New belt | 35 SEEM units |

- Tighten the screw of the roller **(7)** to **2 m.daN**.
- Fit the tool **[4]**.
- Tighten the screws **(10)** to **7.5 m.daN**.
- Remove the tools.
- Rotate the crankshaft by two turns *(normal direction of rotation)*.
- Check the pegging of the crankshaft/camshaft using tools **[2]** and **[3]**.

**NOTE:** Tools **[2]** and **[3]** should slide in easily.

- Remove the tools.

B1EP120C B1EP121C

# CHECKING AND SETTING THE VALVE TIMING

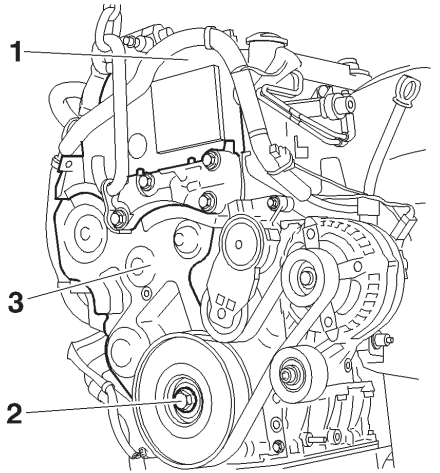


B1BP2LXC

## Engines: 8HX - 8HW - 8HZ

**Tools.**

| | |
|---|---|
| **[1]** Pliers for removing plastic pegs | **: 7504-T** |
| **[2]** Lever for detensioning the dynamic tensioner roller | **: (-).0194.E** |
| **[3]** Engine flywheel setting peg | **: (-).0194.C** |
| **[4]** Camshaft setting peg | **: (-).0194.B** |
| **[5]** Crankshaft and high pressure pump setting peg | **: (-).0194.A** |

**Preliminary operations.**

Remove:
- The front RH wheel.
- The front RH splash-shield, using tool **[1]**.
- The clips of the electrical harness on the upper timing cover.
- The accessories belt, using tool **[2]** *(see corresponding operation)*.

**Check ing the setting.**

Disconnect the battery negative cable.
Remove the upper timing cover **(1)**.
Rotate the engine using the screw **(2)** of the crankshaft pulley.

**NOTE:** The locking hole is located under the crankshaft bearing cap cover.
Undo the screw **(2)**.
Detension the auxiliary drive belt dynamic tensioner roller, using tool **[2]**.

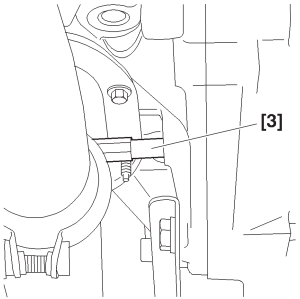


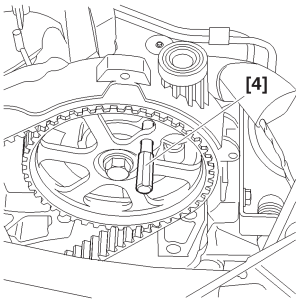


**Engines: 8HX - 8HW - 8HZ**

**Checking the setting (continued).**

Remove:
- the accessories drive belt.
- the accessories drive pulley.
- the lower timing cover **(3)**.

**IMPERATIVE: The magnetic track should show no signs of damage and should not be approached by any other source of magnetism.**

Reposition the screw **(2)**.
Remove tool **[3]**.
Rotate the engine by means of the crankshaft pinion screw **(2)** *(clockwise)*, to bring it to the pegging position.
Position the tool **[4]**.
Peg the crankshaft pinion **(1)**, using tool **[5]**.
Peg the high pressure pump pinion, using tool **[5]**.
**NOTE:** Index **«a»** of the roller tensioner must be centred within the area **«b»**.
Check the correct positioning of index **«a»**.
Remove tools **[4]** and **[5]**.
Rotate the engine ten times.
Fit the tools **[4]** and **[5]**.
If pegging is not possible, carry out the operation to remove/refit the timing belt *(see corresponding operation)*.

B1JP03SC | B1EP18DC | B1EP18EC | B1EP18FC

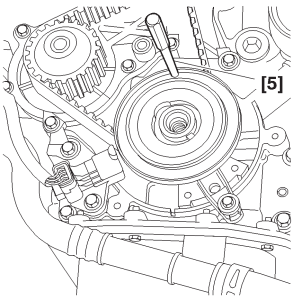


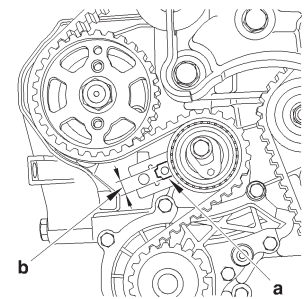

# CHECKING AND SETTING THE VALVE TIMING

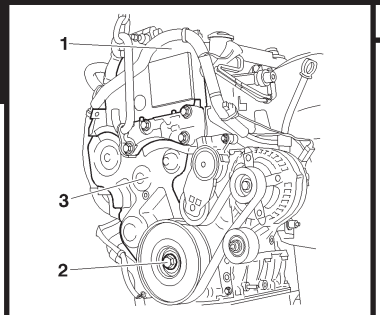


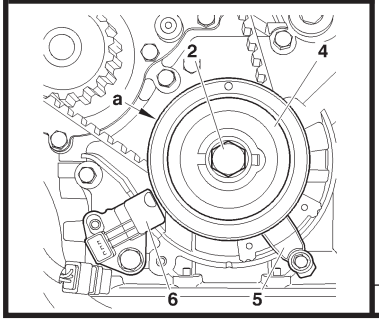


## Engines: 8HX - 8HW - 8HZ

### Setting the timing.

Remove the upper timing cover **(1)**.
Rotate the engine by means of the crankshaft screw **(2)**.

**NOTE:** The pegging hole is located under the crankshaft bearing cap cover.

Peg the engine flywheel, using tool **[3]**.
Remove the lower timing cover **(3)**.
Uncouple the exhaust line from the manifold.

**IMPERATIVE: Uncouple the exhaust line in order to avoid damaging the front flexible pipe. Twisting, pulling and bending the front flexible pipe reduces its life.**

Remove:
- The engine speed sensor **(6)**.
- The belt retaining stop **(5)**.
- The screw **(2)**.
- The crankshaft pinion **(4)** *(with its magnetic track «**a**»)*.

**IMPERATIVE: The magnetic track should show no signs of damage and should not be approached by any other source of magnetism. Should this not be adhered to, it is essential to replace the crankshaft pinion.**

Refit the screw **(2)**.

| B1BP2LXC | B1EP18GC |
|---|---|

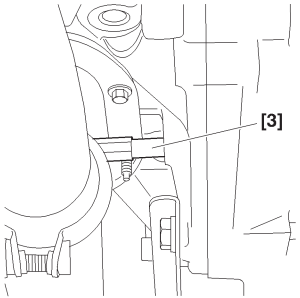


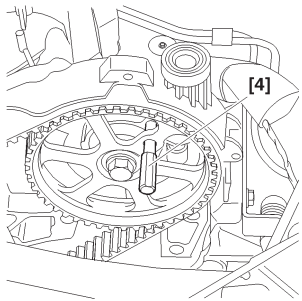


**Engines: 8HX - 8HW - 8HZ**

**Setting the timing (continued).**

Remove the tool **[3]**.

Rotate the engine by means of the crankshaft pinion screw **(2)** *(clockwise)*, to bring it to the pegging position.

Peg the camshaft pulley, using tool **[4]**.

Peg:
- The crankshaft pinion **(6)**, using tool **[5]**.
- The high pressure pump pinion, using tool **[5]**.

Support the engine with the aid of a roller jack equipped with a chock.

Remove:
- The RH engine support **(7)**.
- The intermediate engine support *(right hand side)* **(8)**.

B1JP03SC | B1EP18DC

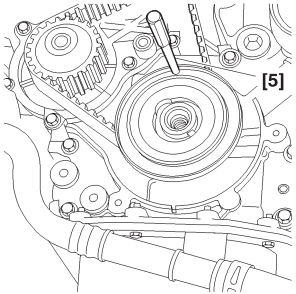


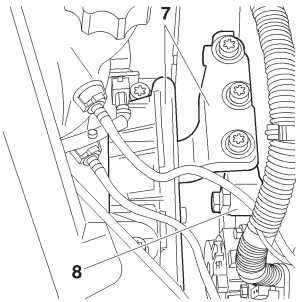


B1EP195C | B1BP2LYC

# CHECKING AND SETTING THE VALVE TIMING

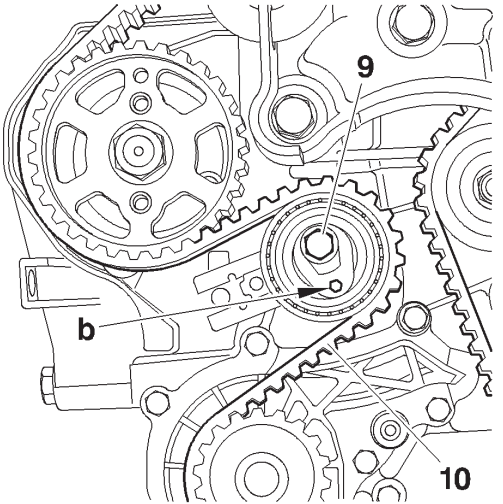


B1EP18HC

**Engines: 8HX - 8HW - 8HZ**

**Setting the timing (continued).**

Hold the tensioner roller, using a hexagonal spanner at «**b**».
Slacken the screw **(9)**.
Remove the timing belt **(10)**.

**Refitting.**

**IMPERATIVE: Check that both the tensioner roller and the fixed roller turn freely *(no tight spots)*. If this is not the case, replace the rollers.**

**Fitting of the pulleys.**

- Camshaft pulley **: Tighten to 4,3 ± 0,4 m.daN**.
- Fuel high pressure pump pulley **: Tighten to 5 ± 0,5 m.daN**.

The crankshaft pinion is located without a screw at the end of the crankshaft.

**Fitting of the rollers.**

**IMPERATIVE: Check that the tensioner roller turns freely *(no tight spot)*. Otherwise, replace the rollers.**

- Guide roller **: Tighten to 4,5 ± 0,4 m.daN**.
- Tensioner roller **: Pre-tighten to 0,1 m.daN**.

Check the condition of the seals at the camshaft and at the crankshaft pinion.

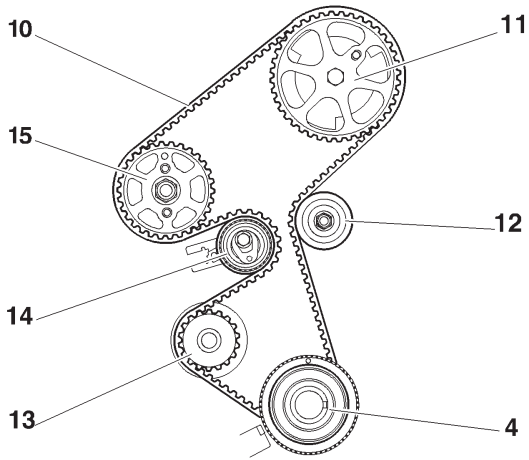


B1EP18JD

**Engines: 8HX - 8HW - 8HZ**

**Setting the timing (continued).**

**NOTE:** Screw **(9)** slackened.

Position the timing belt **(10)** observing the following sequence:

- Crankshaft pinion **(4)**.

- Guide roller **(12)**.

Camshaft pulley **(11)** *(check that the belt is held correctly against the roller).*

Coolant pump pinion **(13)**.

Fuel high pressure pump pulley **(15)**.

Tensioner roller **(14)**.

# CHECKING AND SETTING THE VALVE TIMING

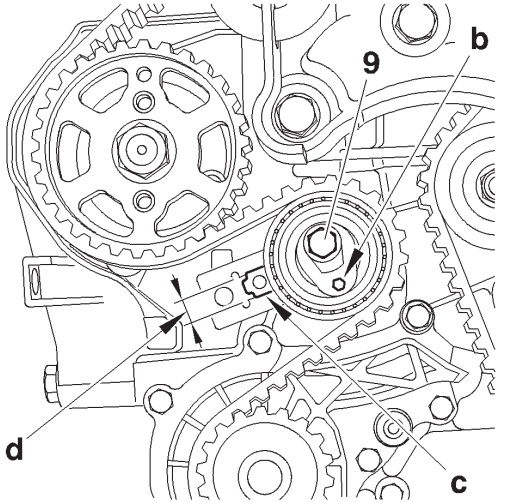


B1EP18KC

**Engines: 8HX - 8HW - 8HZ**

**Setting the timing (continued).**

Turn the tensioner roller to the right to bring the index **«c»** to position **«d»**, using a hexagonal spanner.
Tighten the screw **(9)** of the tensioner roller, tighten to **3 ± 0,3 m.daN**.
Remove the tools **[4]** and **[5]**.

Rotate the engine **ten times** *(check that the timing pinion is correctly up against the crankshaft)*.

Check:

- The pegging of the camshaft.
- The crankshaft pinion.
- The fuel high pressure pump pinion **(15)**.
- The correct positioning of the index of the dynamic tensioner.

If these are not correct, repeat the operation to position the timing belt.

Refit:

- The engine speed sensor **(6)**.
- The belt retaining stop **(5)**, tighten to **0,7 m.daN**.

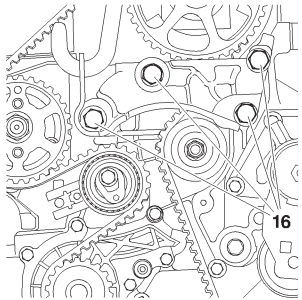


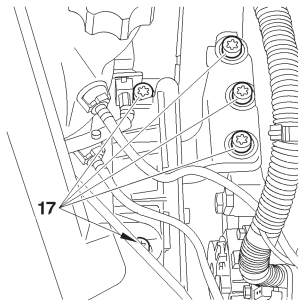


**Engines: 8HX - 8HW - 8HZ**

**Setting the timing (continued).**

Refit:
- The intermediate RH engine support, tighten the screws **(16)** to **5,5 ± 0,5 m.daN**.
- The RH engine support, tighten the screws **(17)** to **4,5 ± 0,4 m.daN**.
- The bottom timing cover **(3)**.

Immobilise the engine flywheel, using tool **[3]**.
Remove the screw **(2)**.
Refit the accessories drive pulley and tighten to:

| | |
|---|---|
| - Pre-tighten to | **: 3 ± 0,3 m.daN**. |
| - Angular tighten to | **: 180° ± 1,8°**. |

Remove tool **[3]**.
Refit:
- The top cover **(1)**.
- The accessories belt *(see corresponding operation)*.
- The exhaust line *(see corresponding operation)*.
- The front RH splash-shield.
- The front RH wheel.

B1EP18LC | B1BP2LZC

| C3 | CHECKING AND SETTING THE VALVE TIMING |
|---|---|

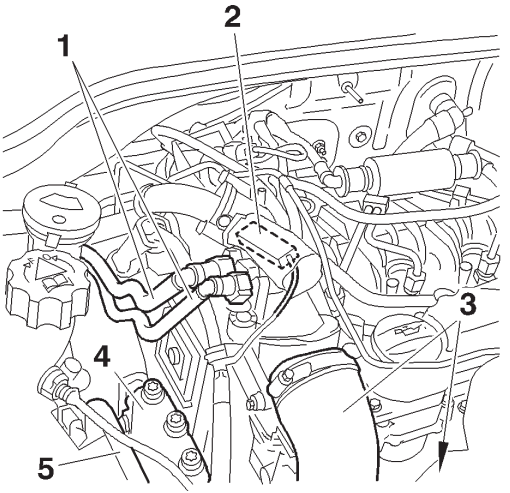


B1BP2N0C

**Engines: 8HY - 8HV**

**Tools.**

| | |
|---|---|
| **[1]** Engine flywheel peg **Ø 12 mm** | **: (-).0194-C** |
| **[2]** Camshaft pulley peg **Ø 8 mm** | **: (-).0194-B** |
| **[3]** Crankshaft pulley peg **Ø 5 mm** | **: (-).0194-A** |

**Preliminary operations.**

Remove:
- The front RH wheel.
- The front RH splash-shield.
- The accessories belt *(see corresponding operation)*.

Uncouple:
- The supply unions **(1)**.
- The air/air heat exchanger inlet/outlet pipes **(3)**.
- The exhaust line *(at the flexible pipe)*.

Disconnect the connector **(2)**.
Support the engine by means of a roller jack equipped with a chock.
Remove the engine supports **(4)** and **(5)**.

# CHECKING AND SETTING THE VALVE TIMING

C3

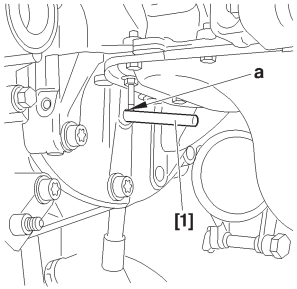


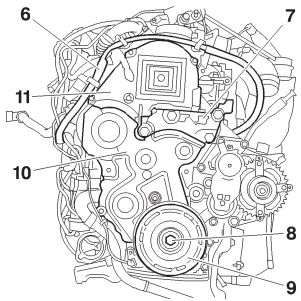


## Engines: 8HY - 8HV

### Checks.

Rotate the engine to engage it *(normal direction of rotation)*.
Immobilise the engine flywheel at «**a**», using tool **[1]**.
Move aside the harness **(6)**.

Remove:

- The engine support **(7)**.
- The screw **(8)**.
- The pulley **(9)**.
- The lower timing cover **(10)**.
- The upper timing cover **(11)**.
- The tool **[1]**.

B1BP2N1C | B1BP2N2C

| C3 | CHECKING AND SETTING THE VALVE TIMING |
|---|---|

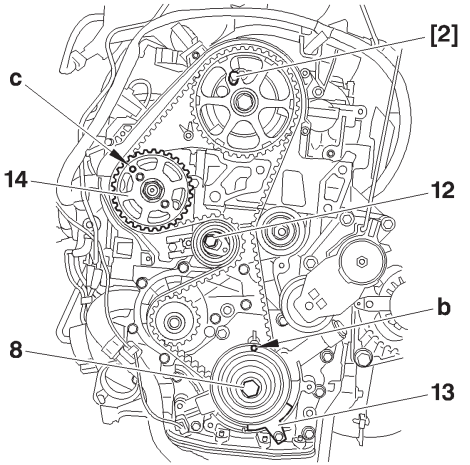


B1EP18YD

**Engines: 8HY - 8HV**

**Checks (continued).**

Refit the screw **(8)**.
Rotate the crankshaft six times *(clockwise)*.

**IMPERATIVE: Never rotate the engine backwards.**

Peg:
- The camshaft, using tool **[2]** *(oil the pegs)*.
- The fuel high pressure pump pulley **(14)**, using tool **[3]** at **«c»**.

**WARNING:** The magnetic track should show no signs of damage and should not be approached by any source of magnetism.

Peg the crankshaft at **«b»**, using tool **[3]**.

**IMPERATIVE: Should it be impossible to peg the camshaft, check that the offset between the hole in the camshaft pinion and the pegging hole is not greater than 1 mm.**
**Otherwise repeat the operation to position the timing belt *(see corresponding operation)*.**

# CHECKING AND SETTING THE VALVE TIMING

C3

**Engines: 8HY - 8HV**


B1EP18ZC

**Checks (continued).**

**NOTE:** The index **«e»** of the dynamic tensioner roller should be centred within the area **«d»**.
Check the correct positioning of the index **«e»**.
If it is not correct, repeat the operation to tension the timing belt *(see corresponding operation)*.

**Refitting.**

Refit the tool **[1]** at **«a»**.
Remove the screw **(8)**.
Refit:
- The upper timing cover **(11)**.
- The lower timing cover **(10)**.
- The accessories drive pulley **(9)**.
- The screw **(8)**.

**Tightening torque.**

- Screw **(8)**:
  - Pre-tighten to **: 3 ± 0,3 m.daN**.
  - Angular tightening **: 180° ± 5°**.

Remove the tool **[1]**.

C3

# CHECKING AND SETTING THE VALVE TIMING

**Engines: 8HY - 8HV**

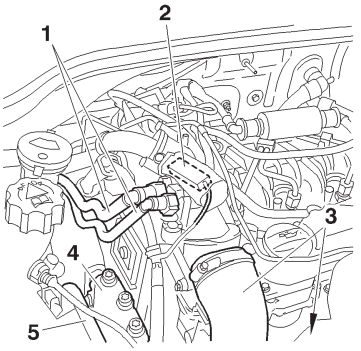


B1BP2N0C

**Checks (continued).**

**Refit:**
- The engine support **(7)**, tighten to **1,5 ± 0,4 m.daN**.
- The engine support **(4)**, tighten to **6,1 ± 0,6 m.daN**.
- The engine support **(5)**, tighten to **6 ± 0,6 m.daN**.
- The electrical harness **(6)**.

**Couple:**
- The exhaust line, tighten the collar to **: 2,5 ± 0,3 m daN**.
- The fuel supply unions **(1)**.
- The air/air heat exchanger inlet/outlet pipes **(3)**.

Connect the connector **(2)**.

**Refit:**
- The accessories belt *(see corresponding operation)*.
- The front RH splash-shield *(see corresponding operation)*.
- The front RH road wheel, tighten to **9 ± 1 m.daN**.

Reconnect the battery.

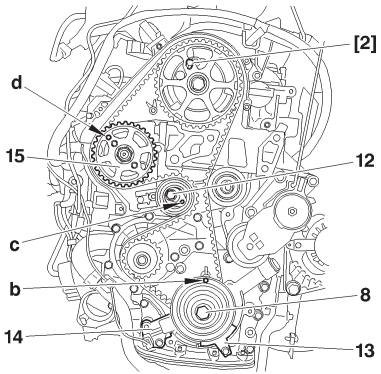


B1EP18VD

**Engines: 8HY - 8HV**

**Setting the timing.**

Perform the preliminary operations for checking the timing up to removing tool **[1]** at **«a»** for immobiling the engine flywheel.
Refit screw **(8)**.
Rotate the crankshaft to bring the camshaft towards its pegging point.
Peg the camshaft, using tool **[2]** *(oil the pegs)*.

**WARNING: Do not press or damage the track which is the target for the engine speed sensor (14).**

Peg the crankshaft at **«b»**, using tool **[3]**.
Remove:
- The timing protector **(13)**.
- The engine speed sensor **(14)**.

Slacken the screw **(12)** of the tensioner roller, keeping it slack with the aid of a hexagonal spanner at **«c»**.
Detension the belt by pivoting the tensioner roller *(clockwise)*.
Remove the timing belt, commencing with the coolant pump pinion.
Peg the pulley **(15)**, using a **5 mm** diameter peg at **«d»**.

| C3 | CHECKING AND SETTING THE VALVE TIMING |
|---|---|

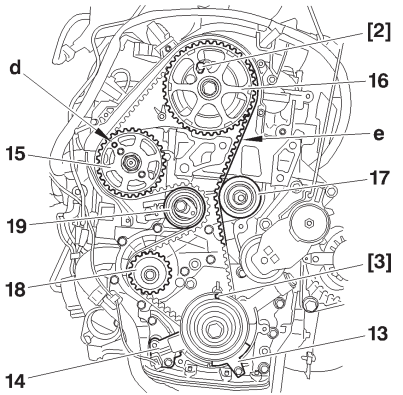


B1EP18WD

**Engines: 8HY - 8HV**

**Setting the timing (continued).**

**Checking the setting.**

**IMPERATIVE: Just prior to refitting, carry out the following tests.**

Check that:
- the rollers and the coolant pump operate freely *(no play and no tight spot)*.
- there are no traces of oil *(from the crankshaft and camshaft sealing rings)*.
- there is no leak of coolant fluid *(from the coolant pump)*.
- the target track of the engine speed sensor **(14)** is not damaged or scratched *(if necessary replace the defective components)*.

**Refitting.**

Fit the timing belt on the crankshaft pinion.
Position the belt on the guide roller, with the belt well tensioned.

Refit:
- The timing protector **(13)**.
- The sensor **(14)**.

Engines: 8HY - 8HV

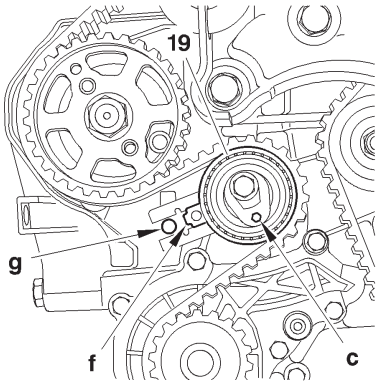


B1EP18XC

**Setting the timing (continued).**

**Checks (continued).**

Reposition the timing belt, belt at **«e»** well tensioned, in the following order:
- Guide roller **(17)**.
- Camshaft pulley **(16)**.
- Fuel high pressure pump pulley **(15)**.
- Coolant pump pinion **(18)**.
- Tensioner roller **(19)**.

Remove the **5 mm** diameter peg at **«d»**.

**Adjusting the fitting tension of the belt.**

Action the tensioner roller **(19)** to align the marks **«f»** and **«g»**, avoiding detensioning the timing belt, with the aid of a male hexagonal spanner, at **«c»**.
If this is not successful, repeat the operation to tension the belt.
Hold the tensioner roller in position **(19)**.
Tighten the tensioner roller, tightening to **3,7 ± 0,3 m.daN**.
Check the position of the tensioner roller *(the alignment of the marks «f» and «g» should be correct)*.
Remove tools **[2]** and **[3]**.
Turn the crankshaft **six rotations** *(clockwise)*.

C3

# CHECKING AND SETTING THE VALVE TIMING

**Engines: 8HY - 8HV**

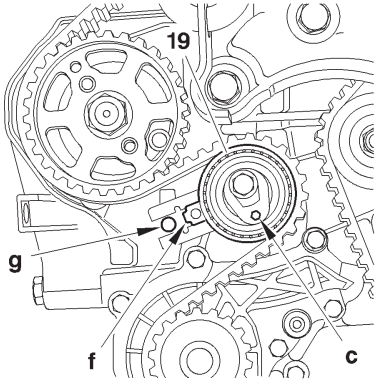


B1EP18XC

**Adjusting the timing belt tension (continued).**

**IMPERATIVE: Never rotate the engine backwards.**

**WARNING:** Do not touch or damage the track of the target of the engine speed sensor **(14)**.

Peg the crankshaft, using tool **[3]**.

Check the position of the tensioner roller *(the alignment of the marks «**f**» and «**g**» should be correct)*.

If this is not the case, repeat the operation to tension the belt.

Peg the camshaft pulley, using tool **[2]**.

**IMPERATIVE: Should it be impossible to peg the camshaft, check that the offset between the camshaft hole and the pegging hole is not more than 1 mm. If the offset is too great, repeat the operation.**

Remove the pegs **[2]** and **[3]**.
Refit tool **[1]** at «**a**».
Remove the screw **(8)**.

Complete the refitting.

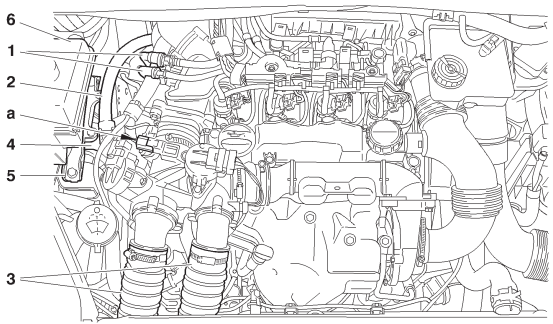


B1BP304D

**Engines: 9HZ - 9HY**

**Tools.**

| | |
|---|---|
| **[1]** Flywheel setting peg | **: (-).0194.C** |
| **[2]** Camshaft setting peg | **: (-).0194.B** |
| **[3]** Crankshaft setting peg | **: (-).0194.A** |

**Checking and setting the timing.**

**Removing.**

Raise and support the vehicle, wheels hanging.
Disconnect the positive and negative terminals of the battery.
Remove:
- The front RH wheel.
- The front RH splash-shield.
- The accessories drive belt *(see corresponding operation)*.

Uncouple:
- The fuel supply unions **(1)**.
- The air/air heat exchanger inlet and outlet pipes **(3)**.
- The exhaust line *(at the flexible pipe)*.

Disconnect the connecter at **«a»**.
Remove and move aside the power steering fluid reservoir **(6)**.
Uncouple, plug and move aside the tube **(2)**.
Support the engine with a roller jack equipped with a block.
Remove the engine supports **(4)** and **(5)**.

# CHECKING AND SETTING THE VALVE TIMING

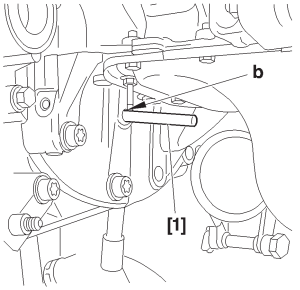


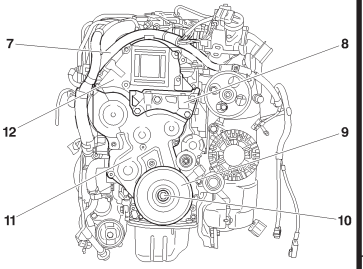


## Engines: 9HZ - 9HY

Rotate the engine to drive it in its normal direction of rotation.

Peg the flywheel, using tool **[1]** at **«b»**.

Move aside the harness **(7)**.

Remove:

- The engine support **(8)**.
- The screw **(10)**.
- The accessories drive pulley **(9)**.
- The lower timing cover **(11)**.
- The upper timing cov **(12)**.
- The tool **[1]**.

| B1BP305C | B1EP1E3D |
|---|---|

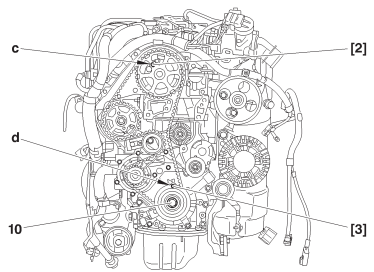



**Engines: 9HZ - 9HY**

Refit the screw **(10)**.
Rotate the crankshaft **six times** *(clockwise)*.

**IMPERATIVE: Never turn it backwards.**

Peg the camshaft at **«c»**, using tool **[2]** *(oil the peg)*.
**WARNING:** The magnetic track should not show any sign of damage and should not be approached by any other magnetic source.
Peg the crankshaft at **«d»**, using tool **[3]**.

**ESSENTIAL: Should it not be possible to peg the camshaft, check that the offset between the camshaft pinion hole and the pegging hole is not more than 1 mm. If it is more, repeat the operation to position the timing belt *(see corresponding operation)*.**

**Note:** The index **«e»** of the dynamic tensioner roller should be centred in the interval **«d»**
Check the correct positioning of the index **«e»**.
If it is not correct, repeat the operation to tension the timing belt *(see corresponding operation)*.
Remove tools **[2]** and **[3]**.

B1EP1E4D | B1EP1E5C

**Refitting.**

Refit tool **[1]** at «**b**».
Remove the screw **(10)**.
Refit:
- The upper timing cover **(12)**.
- The lower timing cover **(11)**.
- The accessories drive pulley **(9)**.
- The screw **(10)**.

**Tightening torque**

| | | |
|---|---|---|
| Screw **(10)** | Pre-tighten to | **: 3 ± 0,3 m.daN**. |
| | Angular tighten | : **180° ± 5°**. |

Remove tool **[1]**.
Refit:
- The engine support **(8)**, tighten to **5,5 ± 0,4 m.daN**.
- The engine support **(4)**, tighten to **6,1 ± 0,6 m.daN**.
- The engine support **(5)**, tighten to **2,5 ± 0,2 m.daN**.
- The electrical harness **(7)**.
- The power steering fluid reservoir **(6)**.

Couple:
- The tube **(2)**.
- The exhaust line, tighten the clip to **2,5 ± 0,3 m.daN**.
- The fuel unions **(1)**.
- The air/air heat exchanger inlet and outlet pipes **(3)**.

Connect the connector at «**a**».

Refit:
- The accessories drive belt *(see corresponding operation)*.

The front RH splash-shield *(see corresponding operation)*.
The front RH wheel, tighten to **9 ± 1 m.daN**.
Reconnect the positive and negative terminals of the battery.

**IMPERATIVE: Perform the operations that are necessary following a reconnection of the battery *(see corresponding operation)*.**

# CHECKING AND SETTING THE VALVE TIMING

## XSARA PICASSO

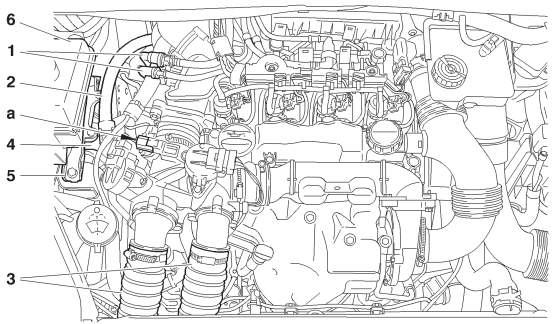


B1BP304D

**Engines: 9HZ - 9HY**

**Tools.**

| | |
|---|---|
| **[1]** Flywheel setting peg | **: (-).0194.C** |
| **[2]** Camshaft setting peg | **: (-).0194.B** |
| **[3]** Crankshaft setting peg | **: (-).0194.A** |

**Checking and setting the timing.**

**Removing.**

Raise and support the vehicle, wheels hanging.
Disconnect the positive and negative terminals of the battery.
Remove:
- The front RH wheel.
- The front RH splash-shield.
- The accessories drive belt *(see corresponding operation)*.

Uncouple:
- The fuel supply unions **(1)**.
- The air/air heat exchanger inlet and outlet pipes **(3)**.
- The exhaust line *(at the flexible pipe)*.

Disconnect the connecter at **«a»**.
Remove and move aside the power steering fluid reservoir **(6)**.
Uncouple, plug and move aside the tube **(2)**.
Support the engine with a roller jack equipped with a block.
Remove the engine supports **(4)** and **(5)**.

# CHECKING AND SETTING THE VALVE TIMING

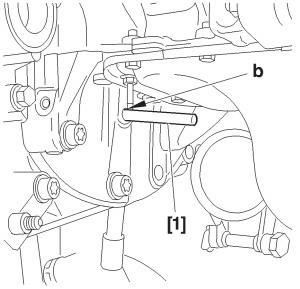


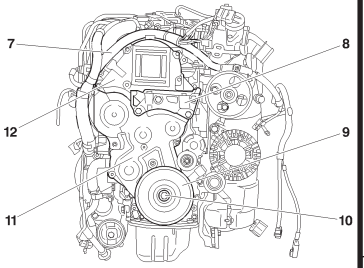


**Engines: 9HZ - 9HY**

Rotate the engine to drive it in its normal direction of rotation.

Peg the flywheel at «**b**». using tool **[1]**.

Move aside the harness **(7)**.

Remove:

- The engine support **(8)**.

- The screw **(10)**.

- The accessories drive pulley **(9)**.

- The lower timing cover **(11)**.

- The upper timing cov **(12)**.

- The tool **[1]**.

| B1BP305C | B1EP1E3D |
|---|---|

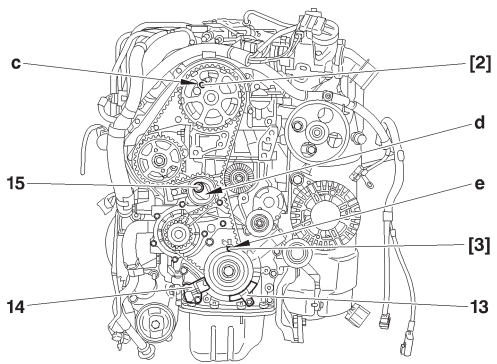


B1EP1E6D

**Engines: 9HZ - 9HY**

Refit the screw **(10)**.
Turn the crankshaft to bring the camshaft towards its pegging point.
Peg the camshaft at **«c»**, using tool **[2]** *(oil the pegs)*.
**WARNING: Do not press or damage the track of the engine speed sensor target (13).**
Peg the crankshaft at **«e»**, using tool **[3]**.
Remove:
- The timing belt protector **(13)**.
- The engine speed sensor **(14)**.

Slacken the screw **(15)** of the tensioner roller, and keep it slackened using an allen spanner at **«d»**.
Detension the timing belt by pivoting the tensioner roller *(clockwise)*.
Remove the timing belt, starting with the coolant pump pinion.

**Checks.**
**ESSENTIAL: Just prior to refitting, proceed to the checks as below.**
Check:
- That the rollers and the coolant pump pulley turn freely *(without play and without tight spot)*.
- That there are no signs of oil leaks *(at the crankshaft and camshaft seals)*.
- That there are no leaks of coolant fluid *(at the coolant pump)*.
- That the track of the engine speed sensor target **(15)** is not damaged or scratched.

Replace any components that are defective *(if necessary)*.

# CHECKING AND SETTING THE VALVE TIMING

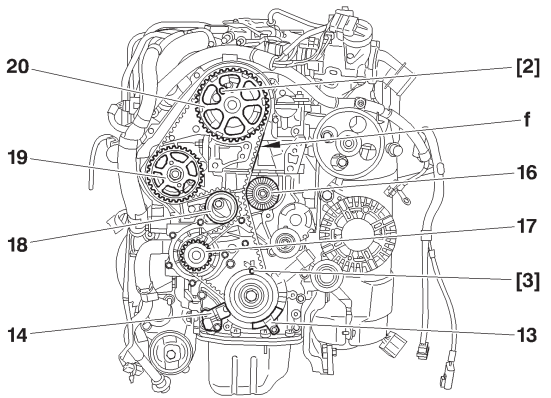


B1EP1E7D

**Engines: 9HZ - 9HY**

**Refitting.**

Fit the timing belt on the crankshaft pinion.

Position the belt on the guide roller, belt well tensioned.

Refit:
- The timing belt protector **(13)**.
- The engine speed sensor **(14)**.

Reposition the timing belt, strip **«f»** well tensioned, in the following sequence:

- Guide roller **(16)**.
- Camshaft pulley **(20)**.
- Fuel high pressure pump pulley **(19)**.
- Coolant pump pulley **(17)**.
- Tensioner roller **(18)**.

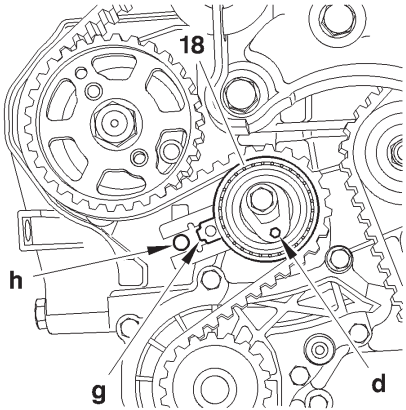


B1EP1E8C

**Engines: 9HZ - 9HY**

**Adjusting the timing belt tension.**

Act on the tensioner roller **(18)** to align the marks «**g**» and «**h**», avoiding detensioning the timing belt, using an allen spanner at «**d**».
Should this fail, repeat the operation to tension the timing belt.
Hold the tensioner roller **(18)**.
Tighten the tensioner roller fixing nut to **3,7 ± 0,3 m.daN**.
Check the position of the tensioner roller *(the alignment of the marks «**g**» and «**h**» should be correct)*.
Remove tools **[2]** and **[3]**.
Rotate the crankshaft **six times** *(clockwise)*.

**IMPERATIVE: Never rotate the engine backwards.**

**WARNING:** Do not touch or damage the track of the target of the engine speed sensor **(14)**.

Peg the crankshaft, using tool **[3]**.
Check the position of the tensioner roller *(the alignment of the marks «**g**» and «**h**» should be correct)*.
If this is not the case, repeat the operation to tension the timing belt.

Peg the camshaft pulley, using tool **[2]**.

**IMPERATIVE: Should it be impossible to peg the camshaft, check that the offset between the camshaft hole and the pegging hole is not more than 1 mm. If the offset is too great, repeat the operation.**

Remove tools **[2]** and **[3]**.

**Refitting (continued).**

Refit tool **[1]** at **«b»**.
Remove the screw **(10)**.
Refit:
- The upper timing cover **(12)**.
- The lower timing cover **(11)**.
- The accessories drive pulley **(9)**.
- The screw **(10)**.

**Tightening torque**

| | | |
|---|---|---|
| Screw **(10)** | Pre-tighten to | **: 3 ± 0,3 m.daN**. |
| | Angular tighten | **: 180° ± 5°**. |

Remove tool **[1]**.
Refit:
- The engine support **(8)**, tighten to **5,5 ± 0,4 m.daN**.
- The engine support **(4)**, tighten to **6,1 ± 0,6 m.daN**.
- The engine support **(5)**, tighten to **2,5 ± 0,2 m.daN**.
- The electrical harness **(7)**.
- The power steering fluid reservoir **(6)**.

Disengage the jack from under the engine.
Couple:
- The tube **(2)**.
- The exhaust line, tighten the clip to **2,5 ± 0,3 m.daN**.
- The fuel unions **(1)**.
- The air/air heat exchanger inlet and outlet pipes **(3)**.

Connect the connector at **«a»**.

Refit:
- The accessories drive belt *(see corresponding operation)*.
- The front RH splash-shield *(see corresponding operation)*.
- The front RH wheel, tighten to **9 ± 1 m.daN**.

Reconnect the positive and negative terminals of the battery.

**IMPERATIVE: Perform the operations that are necessary following a reconnection of the battery *(see corresponding operation)*.**

# CHECKING AND SETTING THE VALVE TIMING

XSARA

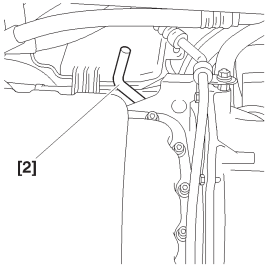


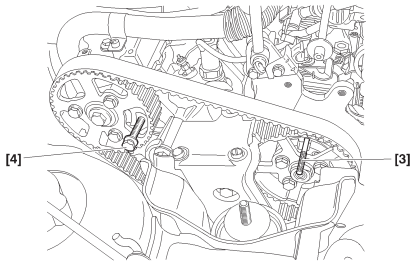


**Engine: WJY**

**Tools.**

| | |
|---|---|
| **[1]** Pliers for remving plastic pins | **: 7504-T or (-).1311** |
| **[2]** Flywheel peg | **: 7014-T.J or (-).0188 Y** |
| **[3]** Injection pump setting peg **Ø 6 mm** | **: (-).0188 H** |
| **[4]** Screw H M8 | **: (-).0188 E** |
| **[5]** Belt retaining pin | **: (-).0188 K** |
| **[6]** Square for adjusting belt tension | **: (-).0188 J1** |
| **[7]** Belt tension measuring instrument, with digital display | **: SEEM CTG 105.5M** |

**Checking the timing.**

- Peg the flywheel, using tool **[2]**.
- Peg the camshaft hub, using tool **[4]**.
- Peg the injection pump hub, using tool **[3]**.

**IMPERATIVE: If the pegging proves impossible, repeat the setting of the timing.**

| B1BP2FTC | B1EP16PD |
|---|---|

# CHECKING AND SETTING THE VALVE TIMING

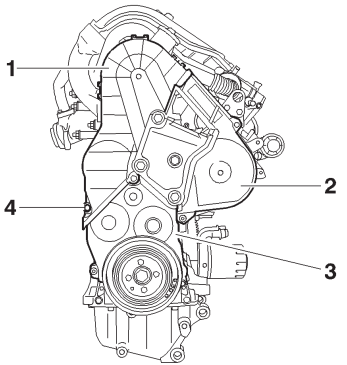


B1BP30BC

## Engine: WJY

### Setting the timing.

**Removing.**

- Disconnect the battery.
- Remove the front RH lower splash-shield, using tool **[1]**.
- Remove the accessories drive belt *(see corresponding operation)*.
- Uncouple and plug the diesel fuel delivery and return hoses.
- Support the engine, using a workshop hoist.
- Remove the RH engine support.
- Engage 5th gear to permit rotation of the engine.
- Remove the upper cover **(1)**.
- Remove the intermediate cover **(2)**.
- Remove the lower cover **(3)**.

**WARNING:** Refit the screw **(4)** equipped with a washer *(5 mm thick)*.

- Rotate the front RH wheel to drive the engine in its normal direction of rotation.
- Bring the camshaft drive and injection pump pinions to their setting points.
- Position the peg **[2]** *(from underneath the vehicle)*.
- Continue turning the engine until the peg **[2]** engages in the flywheel.

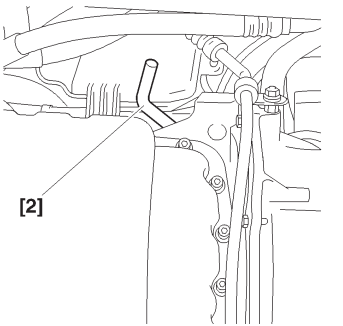


B1BP2FTC

# CHECKING AND SETTING THE VALVE TIMING



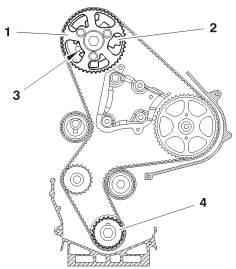


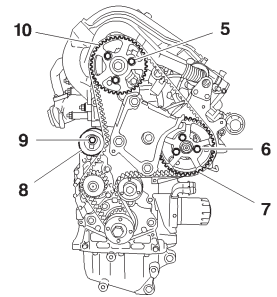


## Engine: WJY

**Setting the timing (continued).**

- Peg the camshaft hub, using tool **[4]**.
- Peg the injection pump hub, using tool **[3]**.
- Slacken screws **(5)** and **(6)**.
- Slacken screw **(9)** of the tensioner roller **(8)**.
- Remove the timing belt.

**Refitting.**

- Retighten screws **(5)** and **(6)** by hand.
- Turn the pinions **(10)** and **(7)** clockwise in order to place them at end of slots.
- Fit the timing belt on the crankshaft.
- Hold the belt, using tool **[5]**.

Position the timing belt in the following sequence:

- Guide roller **(11)**.
- Injection pump pinion **(7)**.
- Camshaft pinion **(10)**.
- Coolant pump pinion **(12)**.
- Tensioner roller **(8)**.

B1EP16PD | B1EP1EDC

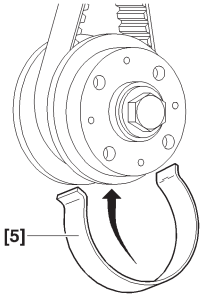


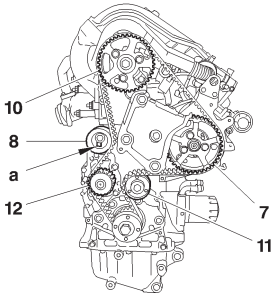


B1EP132C | B1EP1EEC

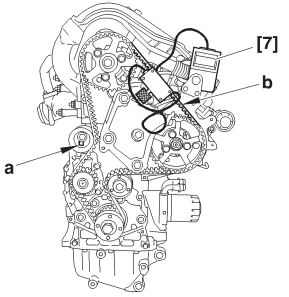


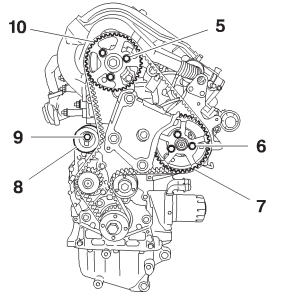


**Engine: WJY**

**Setting the timing (continued).**

**NOTE:** If necessary, you can slightly rotate the pinions **(10)** and **(7)** anti-clockwise in order to engage the belt. The angular displacement value of the belt in relation to the pinions should not be more than half a tooth.

- Remove tool **[5]**.
- Act on the tensioner roller **(8)** by its square **«a»**, using tool **[6]** to check that the camshaft and injection pump pinions can turn freely.
- Position the belt tension instrument **[7]** on the belt at **«b»**.
- Using tool **[6]**, act at **«a»** in the direction opposite to that of engine rotation, to obtain a tension value of **106 ± 2 SEEM units**.
- Tighten screws **(9)**, **(5)** and **(6)**.
- Remove tools **[7]**, **[2]**, **[3]** and **[4]**.
- Rotate the crankshaft **8 times** in the normal direction of rotation.
- Peg the flywheel, using tool **[2]**.
- Peg the camshaft hub, using tool **[4]**.
- Peg the injection pump hub, using tool **[3]**.
- Slacken screws **(9)**, **(5)** and **(6)**.
- Position the belt tension instrument **[7]** on the belt at **«b»**.
- Using tool **[6]**, act at **«a»** in the direction opposite to that of engine rotation, to obtain a tension value of **42 ± 2 SEEM units**.

| B1EP1EFC | B1EP1EDC |
|---|---|

# CHECKING AND SETTING THE VALVE TIMING

XSARA

Engine: WJY

**Setting the timing (continued).**

Tighten:
- Screw **(9)** to **2.1 ± 0.2 m.daN**.
- Screws **(5)** to **2,3 ± 0.2 m.daN**.
- Screws **(6)** to **2,3 ± 0.2 m.daN**.
- Remove and refit tool **[7]**.
- The tension value should be between **38** and **46 SEEM units**.
- Remove tools **[7]**, **[2]**, **[3]** and **[4]**.
- Turn the crankshaft **2 times** in the normal direction of rotation.
- Peg the flywheel, using the peg **[2]**.
- Visually check the peggings of the camshaft and injection pump.

**ESSENTIAL: Visually check that the offsets between the holes of the camshaft and injection pump hubs and the corresponding pegging holes are not more than 1 mm. If necessary, recommence the procedure for fitting the timing belt.**

**Setting the timing (continued).**

- Remove the peg **[2]**.
- Remove the screw **(4)** and the washer.
- Refit the lower cover **(3)**.
- Refit the intermediate cover **(2)**.
- Refit the upper cover **(1)**.
- Remove the RH engine support.
- Take away the workshop hoist.
- Remove the plugs and recouple the diesel fuel delivery and return hoses.
- Refit the accessories drive belt *(see corresponding operation)*.
- Refit the RH lower splash-shield.
- Disengage **5th gear**.
- Connect the battery.

| XSARA - XSARA PICASSO | CHECKING AND SETTING THE VALVE TIMING |
|---|---|

**Engines: RHY - RHZ** **N° RPO 9128 →**

| *OLD FITTING: → N° RPO 9127* | *NEW FITTING N° RPO 9128 →* |
|---|---|

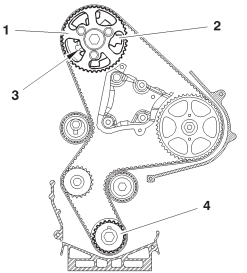


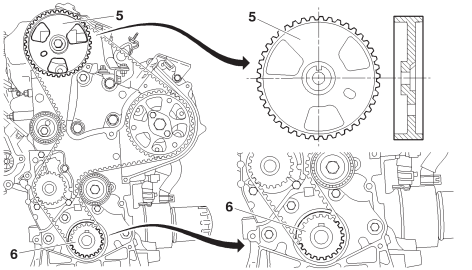


**(1)** «**Idler**» camshaft pulley
**(2)** Target for cylinder reference sensor.
**(3)** Camshaft hub.
**(4)** «**Fixed**» crankshaft pinion.
The determining of the tension of the timing belt is done on the camshaft pulley **(1)**.

B1EP176D

*The new timing on **8 valve** engines DW10TD **(RHY)** and DW10 ATED **(RHS-RHZ)** requires the following components:*
*«**Idler**» crankshaft pinion*
*«**Fixed**» camshaft pulley.*

**(5)** «**Fixed**» camshaft pulley (*pulley with integral cylinder reference sensor target)*.
**(6)** «**Idler**» crankshaft pinion *(with increased width keyway groove)*.
The determining of the tension of the timing belt is done on the crankshaft pinion **(6)**.

B1EP177D

**Engines: RHY - RHZ N° RPO 9128 ➔**

***NEW FITTING N° RPO 9128 ➔ (Continued)***

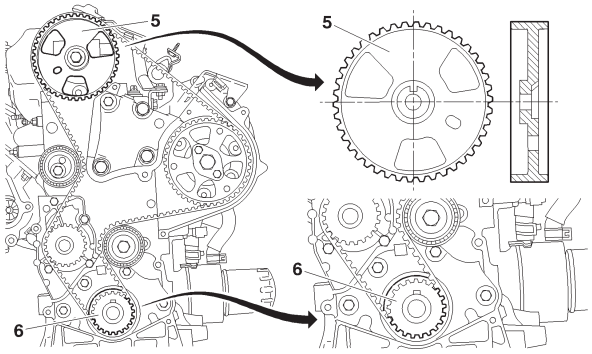


B1EP177D

The new fitting discontinues the following components:

- Camshaft hub.
- Cylinder reference sensor target.

**Repair – Accessories drive pulley**
**Remove – Refit**

**WARNING:** Peg the camshaft and the crankshaft before ever removing the accessories drive pulley *(the pegging prevents any offsetting of the camshaft)*.

If necessary, apply a paint spot to mark the accessories drive pulley being replaced.

**Replacement parts.**

The Replacement Parts service markets the old as well as the new components.

| XSARA - XSARA PICASSO | CHECKING AND SETTING THE VALVE TIMING |
|---|---|

**NOTE: Checking and setting the valve timing on engines: RHY-RHZ N° / RPO 9127**
**See Mechanic's Handbook 2003: pages 193 to196**

**Engines: RHY - RHZ** **N° RPO 9128 ➔**

**Tools.**

| | |
|---|---|
| **[1]** Belt tension measuring equipment | : **4122-T** |
| **[2]** Tension lever | **: (-).0188.J2** |
| **[3]** Engine flywheel peg | **: (-).0188.Y** |
| **[4]** Belt clamp | **: (-).0188.AD** |
| **[5]** Camshaft pulley peg | **: (-).0188.M** |
| **[6]** Engine flywheel lock | **: (-).0188.F** |
| **[7]** Set of blocking plugs | **: (-).0188.T** |
| **[8]** Pulley extractor | **: (-).0188.P** |
| **[9]** 2 mm dia.peg | **: (-).0188.Q2** |

**Removing.**

**IMPERATIVE: Respect the safety and cleanliness requirements that are specific to high pressure diesel injection (HDi) engines.**

Undo the front RH wheel bolts.
Raise and support the vehicle on the front RH side.
Disconnect the battery negative terminal.

Remove:
- The under-engine sound-deadening.
- The front RH wheel.
- The front RH splash-shield.
- The engine cover.

Unclip and move aside the cooling hose.
Remove the accessories drive belt
*(see corresponding operation).*

# CHECKING AND SETTING THE VALVE TIMING



**Engines: RHY - RHZ** **N° RPO 9128 ➔**

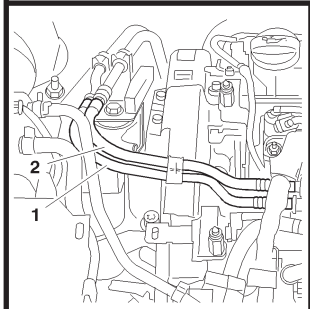


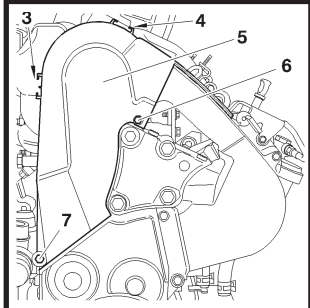


Uncouple, plug and move aside, using tool **[7]**, the fuel delivery pipe **(2)** and return pipe **(1)**.
Remove:
- Screws **(3)**, **(4)** and **(6)**.
- Screw **(7)**.
- The upper timing cover **(5)**.

**WARNING:** Refit screw **(7)** equipped with a spacer *(**17 mm** thick)*, tighten the screw **(7)** to **1,5 ± 0,1 m. daN**.

**NOTE:** The screw **(7)** is one of the screws securing the coolant pump and is there for its sealing.
Put the gear lever in 5th gear.
Turn the road wheel to turn the engine in its direction of rotation.
Orient the camshaft pulley in the pegging position, use a mirror if necessary.

Peg the camshaft, using tool **[5]**.

Peg the engine flywheel, using tool **[3]**.

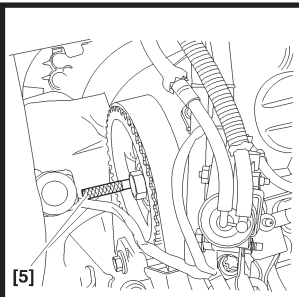


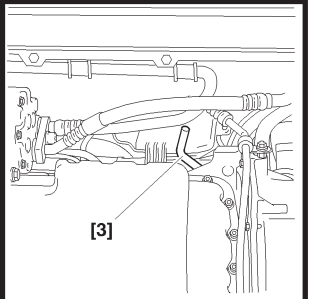


B1BP2R2C | B1EP1A7C | B1BP2H2C | B1BP2H3C

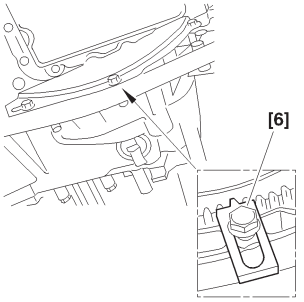


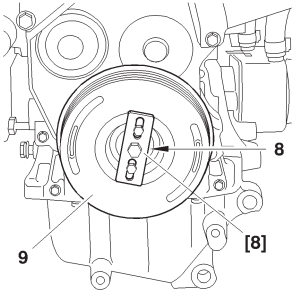


**Engines: RHY - RHZ N° RPO 9128 ➔**

Remove:
- The fixings of the pipe linking the power steering pump with the rotary valve.
- The clutch lower closing plate.

Lock the engine flywheel, using tool **[6]**.
Remove the screw **(8)**.
Refit the screw **(8)** without its thrust washer.

Remove:
- The accessories pulley **(9)**, using tool **[8]**.
- Tool **[6]**.
- The lower torque reaction rod.

Support the engine by means of a workshop hoist.

Remove:
- The bearing shell fitting **(10)**.
- The nut **(12)**.
- Screws **(11)**.
- The bracket **(13)**.

**NOTE:** Lift then lower the engine with the workshop hoist, to have access to the timing cover fixing screws.

Remove:
- The intermediate timing cover.
- The lower timing cover.

B1CP04BC | B1BP2R3C | B1BP2R4C

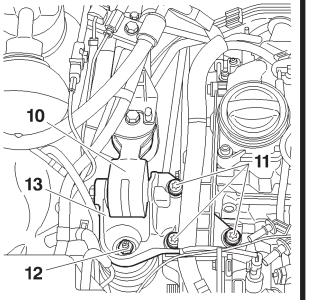

# CHECKING AND SETTING THE VALVE TIMING



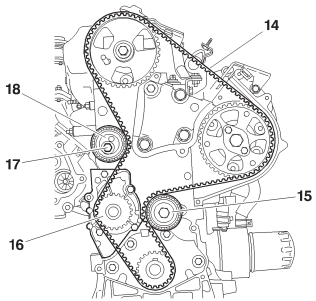


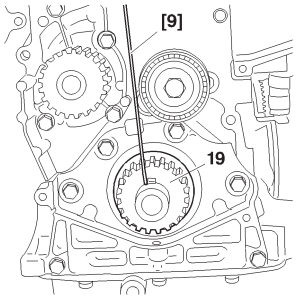


**Engines: RHY - RHZ** **N° RPO 9128 ➔**

Slacken the screw **(17)** of the tensioner roller **(18)**.

Remove the timing belt **(14)**.

**Checks.**

**IMPERATIVE: Just before refitting, carry out the checks below.**

Check that:
- The rollers **(18)** and **(15)** turn freely *(without play and without any tight spot)*.
- The coolant pump pulley **(16)** turns freely *(without play and without any tight spot)*.
- There are no traces of oil leaks from the crankshaft and camshaft seals, etc.
- The crankshaft pinion travels freely on the keyway.

Replace defective components if necessary.

Peg the crankshaft pinion **(19)** by inserting tool **[9]** on the LH side of the keyway.

B1EP1A8D B1EP1A9C

# CHECKING AND SETTING THE VALVE TIMING

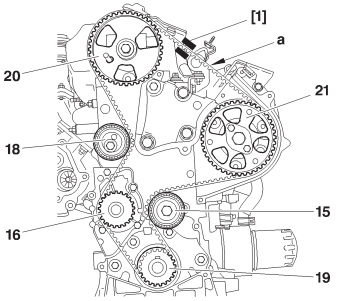


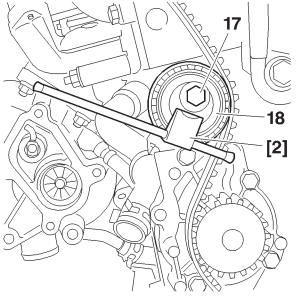


**Engines: RHY - RHZ** **N° RPO 9128 →**

Reposition the timimg belt, belt at «**a**» well tensioned, in the following order:
- Fuel high pressure pump pulley **(21)**.
- Guide roller **(15)**.
- Crankshaft pinion **(19)**.
- Coolant pump pinion **(16)**.
- Tensioner roller **(18)**.

Position tool **[1]** on the belt at «**a**».
Remove tools **[4]** and **[9]**.
Turn the tensioner roller **(18)** anti-clockwise, using tool **[2]**, to attain an overtension of:

**98 ± 2 SEEM units**.

Tighten screw **(17)** of the tensioner roller to **2,5 ± 0,2 m.da N**.
Lock the flywheel by means of tool **[6]**.
Tighten the accessories drive pulley screw **(8)** to **7 ± 0,7 m.da N**.
Remove tools **[1]**, **[3]**, **[5]** and **[6]**.
Rotate the crankshaft eight times in the normal direction of rotation.

Peg:
- The crankshaft, using tool **[3]**.
- The camshaft drive pulley, using tool **[5]**.

| B1EP1ABD | B1EP1ACC |
|---|---|

**Engines: RHY - RHZ N° RPO 9128 ➔**

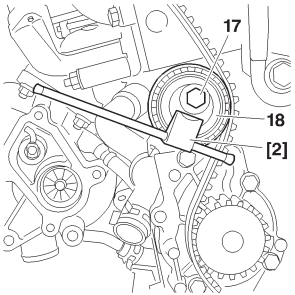


Lock the engine flywheel, using tool **[6]**.
Slacken:
- The accessories drive pulley **(8)**.
- The screw (17) of the tensioner roller **(18)**.

Fit the tool **[1]**.
Turn the tensioner roller, using tool **[2]**, to attain a tension of:

**54 ± 2 SEEM units**.

Tighten screw **(17)** of the tensioner roller **(18)** to **2,5 ± 0,2 m.daN**.
Remove tool **[1]**.
Fit tool **[1]**.
The tension value should be:

**54 ± 3 SEEM units**.

**ESSENTIAL: If the value is incorrect, recommence the operation.**

Remove tools **[1]**, **[3]**, **[5]** and **[6]**.
Rotate the crankshaft two times in the normal direction of rotation.
Peg:
- The crankshaft, using tool **[3]**.
- The camshaft drive pulley.

**IMPERATIVE: If the pegging is not possible, recommence the operation.**

B1EP1ACC

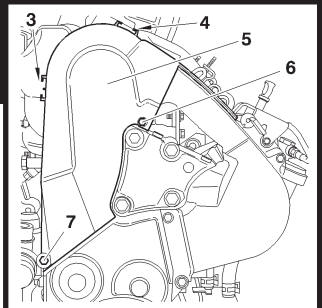


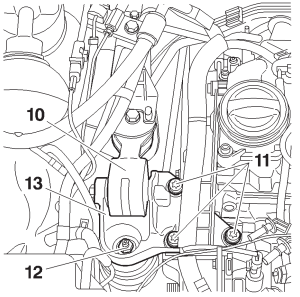


**Engines: RHY - RHZ N° RPO 9128 ➔**

Remove:
- Tools **[3]** and **[5]**.
- Screw **(7)** and the spacer.

Refit:
- The lower, intermediate and upper covers **(5)**.
- Screw **(7)**, tighten to **1,5 ± 0,1 m.daN**.
- Screws **(3)**, **(4)** and **(6)**.
- The bracket **(13)**.
- Screws **(11)**, tighten to **6,1 ± 0,5 m.daN**.
- The nut **(12)**, tighten to **4,5 ± 0,5 m.daN**.

Fit the bearing shell **(10)**.
Take away the workshop hoist.
Clip the fuel delivery and return pipes. Remove the tool **[7]**.
Couple:
- The fuel delivery pipe **(12)**.
- The fuel return pipe **(1)**.

Coat the screw **(8)** with loctite **FRENETANCH**.
Refit the tool **[6]** and the screw **(8)** with the washer **(22)**,
Tighten to **7 ± 0,2 m.daN** and angular tighten to **A = 60° ± 5°**.
Refit the torque reaction rod on the lower engine support.
Remove the tool **[6]**.
Reposition and reclip the cooling hose.
Complete the refitting of components in reverse order to removal.

B1EP1A7C | B1BP2R4C | B1EP1ADC

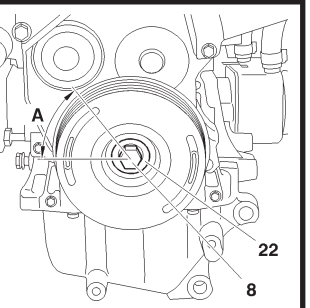

# SPECIAL FEATURES OF THE TIMING

## Camshaft hub identification — RFS

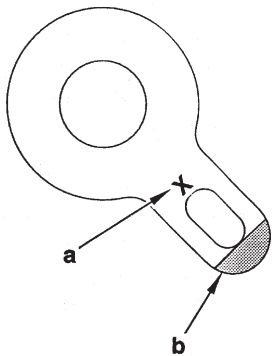


B1EP122C

| Engine | Hubs | “a” Engraving | “b” Paint marking |
|---|---|---|---|
| RFS | Inlet | B | BLUE |
| | Exhaust | | |

# VALVE CLEARANCE SETTINGS

**The valve clearances must be checked with the engine cold**

| | ● Inlet | ⊗ Exhaust |
|---|---|---|
| **Petrol all types** (Except16V-NFU) | 0,20 mm ± 0,05 | 0,40 mm ± 0,05 |
| **NFU** | 1 mm ± 0,05 | 1 mm ± 0,05 |
| **Petrol - 16V all types** 1.4 HDi 1.4 HDi 16V Diesel 2.0 HDi | Hydraulic adjustment | |
| **Diesel all types** (Except Diesel 1.4 HDi 1.4 HDi 16V 2.0 HDi) | 0,15 mm ± 0,08 | 0,30 mm ± 0,08 |

**POSSIBLE PROCEDURES**
**For engines with 4 cylinders in a line (1-3-4-2 )**

Rocking

| Rocking | Adjust |
|---|---|
| 1 ● ⊗ 1 | 4 ● ⊗ 4 |
| 3 ● ⊗ 3 | 2 ● ⊗ 2 |
| 4 ● ⊗ 4 | 1 ● ⊗ 1 |
| 2 ● ⊗ 2 | 3 ● ⊗ 3 |

⊗ Inlet

● Adjust

Fully open (Exhaust)

| Valves fully open | Adjust |
|---|---|
| ⊗ 1 | 3 ● ⊗ 4 |
| ⊗ 3 | 4 ● ⊗ 2 |
| ⊗ 4 | 2 ● ⊗ 1 |
| ⊗ 2 | 1 ● ⊗ 3 |

Engines without hydraulic adjustment: the clearance **(J)** should be checked opposite the cam.

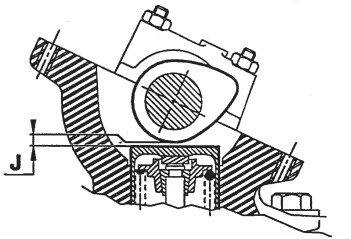


B1DP13QC

# CHECKING THE OIL PRESSURE

## C2 - C3 - C3 PLURIEL

**To be read with the Petrol and Diesel correspondence tables**

| Plaque engine | XFX | KFV | NFU | 8HX | |
|---|---|---|---|---|---|
| Temperature (°C) | 90°C | | | | |
| Pressure (Bars) | 3 | 4 | | 1,3 | 3,5 |
| Rpm | 2000 | 4000 | | 1000 | 4000 |
| | Tools (Kit 4103-T) | | | | |
| 2279-T.Bis | X | X | X | X | |
| 4103-T.B | X | X | X | X | |
| 7001-T | X | X | X | | |
| 1503.J | | | | X | |

**NOTE:** The oil pressure should be checked with the engine hot, after the oil level has been checked.

| | C3 - C3 Pluriel | | | | | | | |
|---|---|---|---|---|---|---|---|---|
| Plaque engine | HFX | KFV | KFU | NFU | 8HX | 8HW | 8HV | 8HY |
| Temperature (°C) | 90°C | | | | | | | |
| Pressure (Bars) | 3 | | 4 | | 1,3 | | 3,5 | |
| Rpm | 2000 | | 4000 | | 1000 | | 4000 | |
| | Tools (Kit 4103-T) | | | | | | | |
| 2279-T.Bis | X | X | X | X | X | X | X | X |
| 4103-T.B | X | X | X | X | X | X | X | X |
| 7001-T | X | X | X | X | | | | |
| 1503.J | | | | | X | X | X | X |

| XSARA | CHECKING THE OIL PRESSURE | | | | | | | |
|---|---|---|---|---|---|---|---|---|
| To be read with the Petrol and Diesel correspondence tables | | | | | | | | |
| | XSARA | | | | | | | |
| Plaque engine | KFW | NFU | RFN | RFS | 8HZ | WJY | RHY | RHZ |
| Temperature (°C) | 90°C | | | 80°C | 90°C | | | |
| Pressure (Bars) | 3 | 4 | 1,5 - 5,1 | 2 - 5,5 | 1,3 - 3,5 | 1,8 - 4,5 | 2 | 4 |
| Rpm | 2000 | 4000 | 1000 - 4000 | 1000 - 4000 | 1000 - 4000 | 1000 - 4000 | 1000 | 4000 |
| | Tools (Kit 4103-T) | | | | | | | |
| 2279-T.Bis | X | X | X | X | X | X | X | X |
| 4103-T.B | X | X | X | X | X | X | X | X |
| 7001-T | | | | X | | | | |
| 4202-T | | | X | | | | X | X |
| 5709-T.B2 | | | | X | | | | |
| 1503-J | | | | | X | | | |
| 4156-T | | | | | | X | | |
| 7017-T.X23 | | | | | | X | | |

**NOTE:** The oil pressure should be checked with the engine hot, after the oil level has been checked.

# CHECKING THE OIL PRESSURE

## XSARA PICASSO

To be read with the Petrol and Diesel correspondence tables

| | XSARA PICASSO | | | | | |
|---|---|---|---|---|---|---|
| Plaque engine | NFV | 6FZ | RFN | 9HZ | 9HY | RHY |
| Temperature (°C) | 90°C | | 80°C | 90°C | | |
| Pressure (Bars) | 3 - 4 | 3,3 - 6,3 | 1,5 - 5 | 1,3 | 3,5 | 2 - 4 |
| Rpm | 2000 - 4000 | 1000 - 4000 | 1000 - 3000 | 1000 | 4000 | 1000 - 4000 |
| | Tools (Kit 4103-T) | | | | | |
| 2279-T.Bis | X | X | X | X | X | X |
| 4103-T.B | X | X | X | X | X | X |
| 7001-T | X | | | | | |
| 4202-T | | X | X | | X | |
| 1503-J | | | | X | X | |

**NOTE:** The oil pressure should be checked with the engine hot, after the oil level has been checked.

# OIL FILTERS

| | TU all types | | | ET3J4 | TU all types | | EW | | XU |
|---|---|---|---|---|---|---|---|---|---|
| | 1.1i | 1.4i | | 1.4i 16V | 1.6i | 1.6i 16V | 1.8i 16V | 2.0i 16V | |
| | HFX | KFV | KFW | KFU | NFV (1) | NFU | 6FZ | RFN | RFS |
| C2 | 1109 R7 | | | | | 1109 R7 | | | |
| C3 | | | | 1109 X4 | | | | | |
| C3 Pluriel | | 1109 R7 | | | | | | | |
| Xsara | | | 1109 R7 | | | | | 1109 T1 | 1109 N3 |
| Xsara Picasso | | | | | 1109 T1 | | 1109 T1 | | |

| | DV4TD | | | DV4TED4 | | DV6TED4 | | DW8 | DW10 | |
|---|---|---|---|---|---|---|---|---|---|---|
| | 1.4 HDi | | | 1.4 HDi 16V | | 1.6 HDi 16V | | 1.9 D | 2.0 HDi | |
| | 8HX | 8HW | 8HZ | 8HV | 8HY | 9HZ | 9HY | WJY | RHY | RHZ |
| C2 | 1109 S5 | | | | | | | | | |
| C3 | 1109 S5 | | | 1109 S5 | | | | | | |
| C3 Pluriel | 1109 S5 | | | | | | | | | |
| Xsara | | | 1109 S5 | | | | | 1109 T1 | | |
| Xsara Picasso | | | 1109 S5 | | | 1109 S5 | | | 1109 T1 | |

PURFLUX = 1109 R7 – 1109 N3 – 1109 T1
MAHLE = 1109 S5
FILTRAUTO = 1109 X4

(1) = NFV (90 hp = 1109 T1) et NFV (100 hp = 1109 R7)

# FILLING AND BLEEDING THE COOLING CIRCUIT

**ALL TYPES**

**Tools.**

**[1]** Filling cylinder **: 4520-T**
**[2]** Adaptor for filling cylinder **: 4222-T**

**IMPERATIVE: Respect the safety and cleanliness requirements.**

- The draining and refilling operations can be carried out using WINN'S or similar coolant fluid replacement equipment; **it is essential to follow the instructions as stated for that equipment.**

**Filling and bleeding.**
- Fit the cylinder adaptor **[2] 4222-T *(Picasso, C2, C3)*** and the filling cylinder **[1] 4520-T *(all types)***.
- Use the coolant to ensure protection between **- 15°C** and **- 37°C**.
- Slowly fill the system.

**NOTE:** Keep the cylinder filled up *(visible level)*.

- Close each bleed screw as soon as the coolant flows without air bubbles.
- Start the engine : Engine speed **1500 rpm**.
- Maintain this speed until the first cooling cycle *(cooling fans cut in and cut out)*.
- Stop the engine and allow it to cool down.
- Remove the filling cylinder **[1] 4520-T *(all types)*** and the cylinder adaptor **[2] 4222-T**.
- Top up the system to the max. mark, with the engine cold.
- Refit the filler cap.

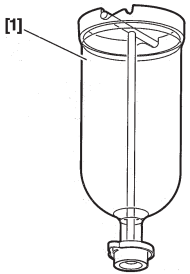


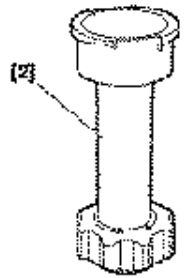


B1GP00AC | E5AP1GNC

| IDLING - DEPOLLUTION | | | | | | | C2 - C3 - C3 PLURIEL - XSARA PICASSO | |
|---|---|---|---|---|---|---|---|---|
| Vehicles | | Engine type | Emission standard | Make - Injection type | Idling speed (± 50 rpm) | | % Content | |
| | | | | | Man. gbox | Auto. gbox : N gear engaged | CO | CO2 |
| C2 C3 PLURIEL | 1.1i | HFX | L4/IFL5 | MAGNETTI MARELLI 48P | 850 | | < 0,5 | > 9 |
| | 1.4i | KFW - KFV | L4/IFL5 | SAGEM S2000 | | | | |
| | 1.6i 16V | NFU | L4 | BOSCH M 7.4.4. | | | | |
| C3 | 1.1i | HFX | L4/IFL5 | MAGNETTI MARELLI 48P | | | | |
| | 1.4i | KFW | L4/IFL5 | SAGEM S2000 | | | | |
| | 1.4i 16V | KFU | L5 | MAGNETTI MARELLI 6LP | | | | |
| | 1.6i 16V | NFU | L4 | BOSCH M 7.4.4. | | | | |
| XSARA | 1.4i | KFW | L4/IFL5 | SAGEM S2000 | | | | |
| | 1.6i | NFU | L4 | BOSCH M.7.4.4. | | | | |
| | 2.0i | RFN | L4 | MAGNETTI MARELLI MM 48P2 | | | | |
| | 2.0i 16V | RFS | L3 | M. MARELLI 1AP10 | | | | |
| XSARA PICASSO | 1.6i | NFV | L4 | BOSCH M7.4.4. | | | | |
| | 1.8i | 6FZ | L4 | SAGEM S2000 | 700 | | | |
| | 2.0i 16V | RFN | L4/IFL5 | M. MARELLI 6LP | 850 | | | |

| PETROL INJECTION | | | | C2 |
|---|---|---|---|---|
| | C2 | | | |
| | 1.1i | 1.4i | | 1.6i 16V |
| **Engine type** | **HFX** | **KFV** | | **NFU** |
| **Emission standard** | L4/IFL5 | L4/IFL5 | | IFL5 |
| **Injection make and type** | M. MARELLI 48P2 | SAGEM S2000 | | BOSCH M.7.4.4. |
| **Fuel pressure (bars)** | 3 | 3 | | 3 |
| **Overspeed cut-off (rpm)** | 5500 | 5500 | | 6600 |
| **Injector resistive value (ohms)** | 14,5 | 12,2 | | 14,5 |
| **Engine coolant temperature sensor resistive value (ohms)** | 3 800 at 10°C | 2500 at 20° C | 800 at 50°C | 230 at 90° C |
| **Idling actuator or stepper motor resistive value (ohms)** | Stepper motor: 53 | | | |
| **Air temperature sensor resistive value (ohms)** | 3 800 at 10°C | 2500 at 20° C | 800 at 50°C | 230 at 90° C |

| C3 - C3 PLURIEL | PETROL INJECTION | | | | | |
|---|---|---|---|---|---|---|
| | C3 | | | | C3 PLURIEL | |
| | 1.1i | 1.4i | 1.4i 16V | 1.6i 16V | 1.4i | 1.6i 16V |
| **Engine type** | **HFX** | **KFV** | **KFU** | **NFU** | **KFV** | **NFU** |
| **Emission standard** | K'-L4INF-L4/IFL5 | K'-L4INF-L4/IFL5 | L5 | L4 | L4/IFL5 | IFL5 |
| **Injection make and type** | M. MARELLI 48P2 | SAGEM S2000 | M. MARELLI 6LP | BOSCH M.7.4.4. | SAGEM S2000 | BOSCH M.7.4.4. |
| **Fuel pressure (bars)** | 3,5 | 3,5 | 3,5 | 3,5 | 3,5 | 3,5 |
| **Overspeed cut-off (rpm)** | 5500 | 5500 | 5500 | 5800 | 5500 | 5800 |
| **Injector resistive value (ohms)** | 14,5 | 12,2 | 14,5 | 14,5 | 14,5 | 14,5 |
| **Engine coolant temperature sensor resistive value (ohms)** | 3800 at 10° C | | 2 500 at 20° C | 800 at 50° C | | 230 at 90° C |
| **Idling actuator or stepper motor resistive value (ohms)** | Stepper motor: 53 | | | | | |
| **Air temperature sensor resistive value (ohms)** | 3800 at 10° C | | 2 500 at 20° C | 800 at 50° C | | 230 at 90° C |

| PETROL INJECTION | | | | | | XSARA - XSARA PICASSO |
|---|---|---|---|---|---|---|
| | XSARA 2 | | | XSARA PICASSO | | |
| | 1.4i | 1.6i 16V | 2.0i 16V | 1.6i | 1.8i 16V | 2.0i 16V |
| **Engine type** | **KFW** | **NFU** | **RFN** | **NFV** | **6FZ** | **RFN** |
| **Emission standard** | L4/IFL5/L5 | L4/IFL5 | L4/IFL5 | L4 | IFL5 | L4/IFL5 |
| **Injection make and type** | SAGEM S2000 | BOSCH M.7.4.4. | M. MARELLI 6LP | BOSCH M.7.4.4. | SAGEM S2000 | M. MARELLI 6LP |
| **Fuel pressure (bars)** | 3 | 3 | 3,5 | 3,5 | 3,5 | 3,5 |
| **Overspeed cut-off (rpm)** | 5500 | 5800 | 6000 | 5700 | 5500 | 6000 |
| **Injector resistive value (ohms)** | 14,5 | 14,5 | 14,5 | 14,5 | 12,2 | 14,5 |
| **Engine coolant temperature sensor resistive value (ohms)** | 3800 at 10° C | | 2 500 at 20° C | 800 at 50° C | | 230 at 90° C |
| **Idling actuator or stepper motor resistive value (ohms)** | Stepper motor: 53 | | | | | |
| **Air temperature sensor resistive value (ohms)** | 3800 at 10° C | | 2 500 at 20° C | 800 at 50° C | | 230 at 90° C |

| ALL TYPES | DEPOLLUTION TECHNICAL CHECKS (FRANCE) |
|---|---|

| All Types Petrol CO Corrected (In %) | All Types Diesel ($m^{-1}$) |
|---|---|
| **Conditions:** At idle, engine warm.<br>➔ **01/96**<br><br>Less than **4.5 %** for vehicles registered before **10/86**.<br>Less than **3.5 %** for vehicles registered after **10/86**.<br><br>**With catalytic converter**<br><br>Greater than 2.0i 89 M.Y.<br>All Types 93 M.Y.<br>**CO** less than **0.5 % at idle speed**.<br>**CO** less than **0.3 % at fast idle speed** between **2500 and 3000 rpm (*)**<br><br>Lambda Probe value **0,97 to 1,03**. | 01/96 ➔<br><br>**Atmospheric engine.**<br><br>**Less than 2.5 $m^{-1}$**<br><br>**Turbocharged engine.**<br><br>**Less than 3.0 $m^{-1}$** |

| EMISSION STANDARDS | | | | | | | ALL TYPES |
|---|---|---|---|---|---|---|---|
| STANDARD | | | | APPLICATIONS | | OBSERVATIONS | CHARACTERISTICS |
| E.E.C. | PSA | | Engines | Vehicles | Applicable | | |
| | A/S | PR | | | | | |
| **ECE R 15.04** | K<br>K' | 15.04<br>15.04 | Petrol<br>Diesel | Utility vehicles:<br>All Types | → 10/89<br><br>imminent | → Utility vehicle limits = private vehicle limits increased by 25 %.<br><br>→ For private vehicles and utility vehicles in major export | With oxygen sensor, without catalytic converter |
| **ECE R 15.05** | W vp | 15.05 | Petrol | Private vehicles:<br>> 2 litres<br>• new models<br>• existing models | 01/10/88 →<br>01/10/89 → | Brussels directive 88/76 «Luxembourg Accords»<br>→ Replaced by 89/458 + 91/441 | |

INJECTION

| ALL TYPES | | | EMISSION STANDARDS | | | | |
|---|---|---|---|---|---|---|---|
| STANDARD | | | | APPLICATIONS | | OBSERVATIONS | CHARACTERISTICS |
| E.E.C. | PSA | | Engines | Vehicles | Applicable | | |
| | A/S | PR | | | | | |
| **US 83** | Z | US 83 | Petrol<br>Diesel | Private vehicles:<br>• certain non-EEC European countries<br>• certain Export countries | Current | → Adoption of U.S. standard | With oxygen sensor and catalytic converter for petrol vehicles |
| **US 87** | Y | US 87 | Diesel | Private vehicles:<br>• certain non-EEC European countries<br>• certain Export countries | Current | → Adoption of U.S. standard | With catalytic converter and EGR |
| **US 93** | Y2 | US 93 | Petrol<br>Diesel | Private vehicles:<br>• certain Export countries | Current | → Adoption of U.S. standard | |

| EMISSION STANDARDS | | | | | | | ALL TYPES |
|---|---|---|---|---|---|---|---|
| STANDARD | | | | APPLICATIONS | | OBSERVATIONS | CHARACTERISTICS |
| E.E.C. | PSA | | Engines | Vehicles | Applicable | | |
| | A/S | PR | | | | | |
| **US 84 LDT** | X1 | US 84 | Petrol<br>Diesel | Private vehicles:<br>• certain non-EEC European countries<br>• certain Export countries | Current | → Adoption of the U.S. standard for light utility vehicles | |
| **US 87 LDT** | X2 | US 87 | Petrol<br>Diesel | Private vehicles:<br>• certain non-EEC European countries<br>• certain Export countries | Current | → Adoption of the U.S. standard for light utility vehicles | |
| **US 90 LDT** | X3 | US 90 | Petrol<br>Diesel | Private vehicles:<br>• certain non-EEC European countries<br>• certain Export countries | Current | → Adoption of the U.S. standard for light utility vehicles | |

| ALL TYPES | | | EMISSION STANDARDS | | | | |
|---|---|---|---|---|---|---|---|
| STANDARD | | | | APPLICATIONS | | OBSERVATIONS | CHARACTERISTICS |
| E.E.C. | PSA | | Engines | Vehicles | Applicable | | |
| | A/S | PR | | | | | |
| **EURO 2**<br><br>**(EURO 96)** | L3 | E.E.C. 95 | Petrol<br>Diesel | Private vehicles:<br>< 6 seats and<br>< 2.5 tonnes<br>• new models<br>• existing models | <br><br><br>01/96 →<br>01/97 → | Brussels Directive 94/12<br><br>→ EURO 93 standard made stricter | With oxygen sensor and reinforced catalytic converter for petrol vehicles.<br>With catalytic converter and EGR for diesel vehicles. |
| **EURO 2**<br><br>**(EURO 96)** | W3 | E.E.C. 95 | Petrol<br>Diesel<br>Gas | Utility vehicles:<br>< 3.5 tonnes<br>Class 1:<br>• new models<br>• existing models<br>Class 2/3:<br>• new models<br>• existing models | <br><br><br>01/97 →<br>10/97 →<br><br>01/98 →<br>10/98 → | Brussels Directive 96/69<br><br>→ 3 classes depending on vehicle weight:<br>Class 1 < 1250 kg<br>Class 2: 1250/1700 kg<br>Class 3: 1700 kg | With oxygen sensor and reinforced catalytic converter for petrol vehicles.<br>With catalytic converter and EGR for diesel vehicles. |

| EMISSION STANDARDS | | | | | | | ALL TYPES |
|---|---|---|---|---|---|---|---|
| STANDARD | | | | APPLICATIONS | | OBSERVATIONS | CHARACTERISTICS |
| E.E.C. | PSA | | Engines | Vehicles | Applicable | | |
| | A/S | PR | | | | | |
| **EURO 3**<br><br>**(EURO 2000)** | W3 | | Petrol<br>Diesel<br>Gas | Utility vehicles:<br>< 3.5 tonnes<br><br>Class 1:<br>• new models<br>• existing models<br>Class 2/3:<br>• new models<br>• existing models | → 01/2000<br>→ 01/2001<br><br>→ 01/2001<br>→ 01/2002 | Brussels Directive 98/69<br>→EURO 2 standard (L3) made stricter<br>→ Fiscal incentives<br>→ 3 classes depending on vehicle weight:<br>Class 1 < 1305 kg<br>Class 2: 1305/1760 kg<br>Class 3: 1760 kg | With 2 oxygen sensors and catalytic converter for petrol vehicles.<br>With catalytic converter and EGR for diesel vehicles.<br><br>With EOBD on-board diagnosis. |
| **EURO 4** | IF/L5 | | Petrol | Private vehicles:<br>All Types<br>• new models<br>• existing models | | Brussels Directive 99/102<br>→ EURO 3 standard (L4) made stricter<br>→ Fiscal incentives | With 2 oxygen sensors and catalytic converter for petrol vehicles.<br><br>With EOBD on-board diagnosis. |

| ALL TYPES | EMISSION STANDARDS | | | | | | |
|---|---|---|---|---|---|---|---|
| STANDARD | | | | APPLICATIONS | | OBSERVATIONS | CHARACTERISTICS |
| E.E.C. | PSA | | Engines | Vehicles | Applicable | | |
| | A/S | PR | | | | | |
| **EURO 4** | IF/L5 | | Petrol<br>Diesel<br>Gas | Private vehicles:<br>All types<br>• new models<br>• existing models | <br><br>→ 01/2005<br>→ 01/2006 | Brussels Directive: 2001/1<br>→ EURO 3 standard (L4) made stricter<br>→ Fiscal incentives | With 2 oxygen sensors and catalytic converter for petrol vehicles.<br><br>With EOBD on-board diagnosis. |
| **EURO 4** | IF/L5 | | Petrol<br>Gas | Utility vehicles:<br>< 3,5 tonnes<br><br>Class 1:<br>• new models<br>• existing models<br>Class 2/3:<br>• new models<br>• existing models | <br><br><br><br>→ 01/2005<br>→ 01/2006<br><br>→ 01/2006<br>→ 01/2007 | Brussels Directives: 99/102 et 2001/1 (Gas)<br>→ EURO 3 standard (L4) made stricter<br>→ Fiscal incentives<br>→ 3 classes depending on vehicle weight:<br>Class 1 < 1305 kg<br>Class 2: 1305/1760 kg<br>Class 3: 1760 kg | With 2 oxygen sensors and catalytic converter for petrol vehicles.<br><br>With EOBD on-board diagnosis. |

# SAFETY REQUIREMENTS: HDi DIRECT INJECTION SYSTEM

**Engines: HDi ALL TYPES**

**SAFETY REQUIREMENTS.**

**Preamble.**
All interventions on the injection system must be carried out to conform with the following requirements and regulations:
- Competent health authorities.
- Accident prevention.
- Environmental protection.

**WARNING:** Repairs must be carried out by specialised personnel informed of the safety requirements and of the precautions to be taken.

**Safety requirements.**
**IMPERATIVE: Take into account the very high pressures in the high pressure fuel circuit *(1350 bars)*, and respect the requirements below:**
- No smoking in proximity to the high pressure circuit when work is being carried out.
- Avoid working close to flame or sparks.

**Engine running:**
- Do not work on the high pressure fuel circuit.
- Always stay clear of the trajectory of any possible jet of fuel, which could cause serious injuries.
- Do not place your hand close to any leak in the high pressure fuel circuit.

After the engine has stopped, wait **30 seconds** before any intervention.

**NOTE:** This waiting time is necessary in order to allow the high pressure fuel circuit to return to atmospheric pressure.

# SAFETY REQUIREMENTS: HDi DIRECT INJECTION SYSTEM

**Engines: HDi ALL TYPES**

**CLEANLINESS REQUIREMENTS.**

**Preliminary operations.**

**IMPERATIVE: The technician should wear clean overalls.**

Before working on the injection system, it may be necessary to clean the apertures of the following sensitive components:
*(refer to corresponding procedures)*
- Fuel filter.
- High pressure fuel pump.
- High pressure fuel injection common rail.
- High pressure fuel pipes
- Diesel injector carriers.

**IMPERATIVE: After dismantling, immediately block the apertures of the sensitive components with plugs, to avoid the entry of impurities.**

**Work area.**
- The work area must be clean and free of clutter.
- Components being worked on must be protected from dust contamination.

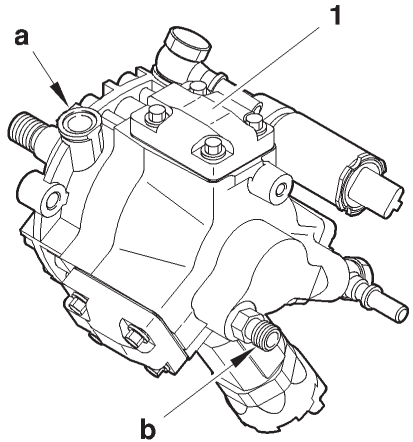


B1HP1K9C

**Engines: 8HX - 8HW - 8HZ**

**Cleaning.**

- The use of high pressure cleaners is prohibited.
- Do not use compressed air.

**Fuel supply circuit.**

- Required fuel: diesel.

**Electric circuit.**

- Swapping injection ECUs between two vehicles will render it impossible to start either vehicle.
- It is forbidden to supply a diesel injector with **12 volts**.

**High pressure fuel pump.**

Do not separate the following components from the high pressure fuel pump **(5)**:
- Sealing ring **(a)** *(no replacement parts)*.
- High pressure outlet connector **(b)** *(will cause a malfunction)*.

**PS: HDi = High pressure Diesel injection**

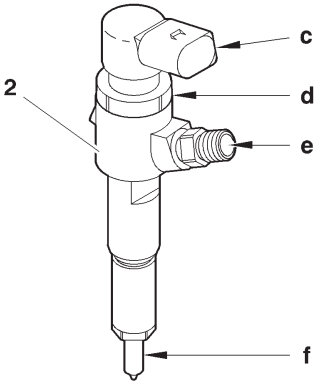


B1HP1KAC

**Engines: 8HX - 8HW - 8HZ**

**Diesel injectors.**

**WARNING: <u>Diesel and ultrasonic cleaners are prohibited</u>.**

Do not separate the following components from the diesel injector carrier **(2)**:
- Diesel injector **(f)** *(no replacement parts)*.
- Electromagnetic element **(c)** *(no replacement parts)*.

Do not alter the position of the nut **(d)** *(malfunction)*.

Do not separate the connector **(e)** from a diesel injector.

It is forbidden to clean the carbon deposits from the diesel injector nozzle.

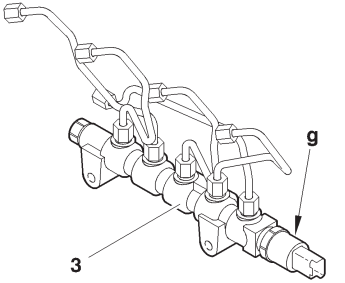


B1HP1KBC

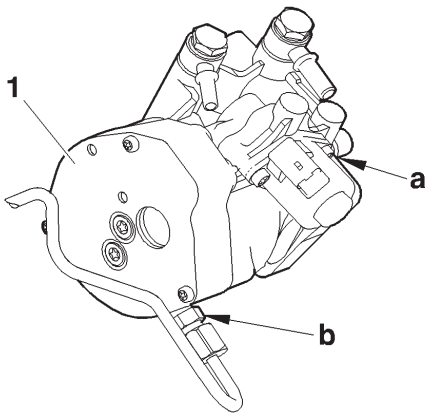


B1HP1J6C

**Engines: 8HY - 8HV**

**Cleaning.**

- The use of high pressure cleaners is prohibited.
- Do not use compressed air.

**Fuel supply circuit.**

- Required fuel: diesel.

**Electric circuit.**

- Swapping injection ECUs between two vehicles will render it impossible to start either vehicle.
- It is forbidden to supply a diesel injector with **12 volts**.

**High pressure fuel pump.**

Do not separate the following components from the high pressure fuel pump **(5)**:
- Sealing ring **(a)** *(no replacement parts)*.
- High pressure outlet connector **(b)** *(will cause a malfunction)*.

**PS: HDi = High pressure Diesel injection**

| C3 | PROHIBITED OPERATIONS: DELPHI HDI DIRECT INJECTION SYSTEM |
|---|---|

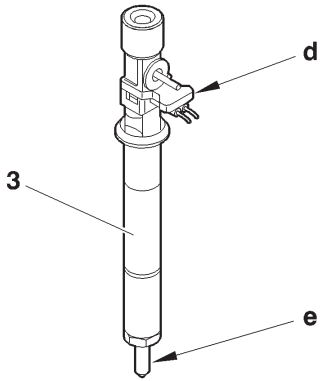


B1HP1J8C

**Engines: 8HY - 8HV**

**Fuel high pressure injection common rail.**

Do not separate the pressure regulator **«c»** from the injection common rail **(2)** *(Risk of malfunction)*.

**Diesel injectors.**

**WARNING:** Diesel and ultrasonic cleaners are prohibited.

Do not separate the following components from the diesel injector carrier **(3)**:
- Diesel injector **(e)** *(no replacement parts)*.
- Electromagnetic component **«d»** *(no replacement parts)*.

It is forbidden to clean the carbon deposits from the diesel injector nozzle..

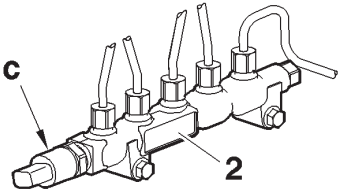


B1HP1J7C

**Engines: RHY - RHZ**

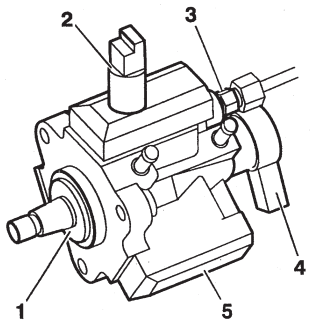


B1HP12CC

**Cleaning.**

- The use of high pressure cleaners is prohibited.
- Do not use compressed air.

**Fuel supply circuit.**

- Required fuel: diesel.

**WARNING:** Do not use other fuels.

**Electric circuit.**

- Swapping injection ECUs between two vehicles will render it impossible to start either vehicle.
- It is forbidden to supply a diesel injector with **12 volts**.

**High pressure fuel pump.**

Do not separate the following components from the high pressure fuel pump **(5)**:
- High pressure fuel pump third piston deactivator **(3)** *(no replacement parts)*.
- High pressure fuel regulator **(4)** *(no replacement parts)*.
- Sealing ring **(1)** *(no replacement parts)*.
- High pressure outlet connector **(3)** *(will cause a malfunction)*.

**PS: HDi = High pressure Diesel injection**

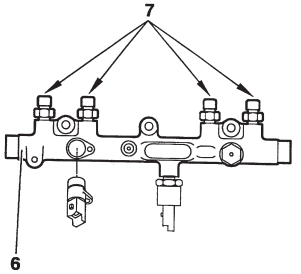


B1HP12DC

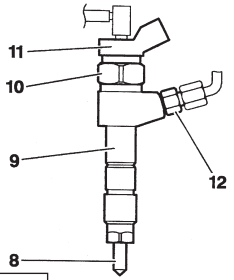


B1HP12EC

## Engines: RHY - RHZ

**High pressure fuel injection common rail.**
- Do not separate the connectors **(7)** from the common injection rail **(6)** *(malfunction)*.

**Diesel injectors.**
**WARNING:** Diesel and ultrasonic cleaners are prohibited.
Do not separate the following components from the diesel injector carrier **(9)**:
- Diesel injector **(8)** *(no replacement parts)*.
- Electromagnetic element **(11)** *(destruction)*.
- Do not alter the position of the nut **(10)** *(malfunction)*.
- Do not separate the connector **(12)** from a diesel injector.
- It is forbidden to clean the carbon deposits from the diesel injector nozzle.
- Identification: Injector carrier
- There are two types of diesel injector carrier classed according to fuel flow.

**Identification by engraving or paint mark**

| Injector carrier | Engraving | Paint mark | Location |
|---|---|---|---|
| **Class 1** | **1** | **Blue** | On the upper part of the coil near to the fuel return aperture |
| **Class 2** | **2** | **Green** | |

**Identification markings:**
**-«a»:** Supplier identification.
**-«b»:** PSA identification number.
**-«c»:** Class identification.

**IMPERATIVE: When replacing a diesel injector carrier, order a component of the same class.**
*(See repair manual)*

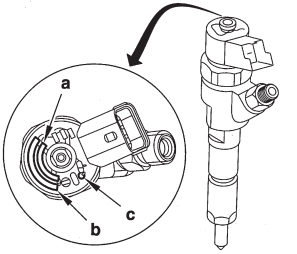


B1HP16PC

| SPECIFICATIONS OF THE DELPHI DIESEL INJECTION PUMP | | | | XSARA |
|---|---|---|---|---|
| | | | | PUMP -TYPE - REFERENCE |
| Dépollution | | | | L3 |
| Equipment | | | | Transponder |
| XSARA | DW | 8B | WJY | DWLP 12<br>R8448 B<br>371 B |

| XSARA | SPECIFICATIONS OF THE DELPHI DIESEL INJECTION PUMP | | | | | | | | | | | |
|---|---|---|---|---|---|---|---|---|---|---|---|---|
| Engine type | Pump Type Reference | Static timing | Dynamic | Reference | | Code | Injector | Adjustments (rpm) | | | Max. speed | |
| | | Initial advance Compression Time (cylinder N° 4) | timing checking (at idle) | Injector | Injector holder + injector | colour | needle lift pressure (Bar) | Fast idling | Anti-stall | Idling | Unladen rpm | Laden rpm |
| WJY | DWLP 12<br>R 8448 B/* | Engine TDC Pegging hole. Value «X» engraved on the pump. | | RDNO SDC 6903 | LDCR 0260 IAA | | 135,5 ± 5 | 950 ± 25 | 1500 + 3 mm shim | 875 ± 25 | 875 ± 25 | 5350 ± 125 |

**(*)** = See table page: 251.

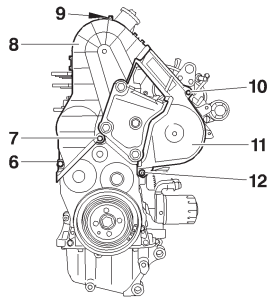


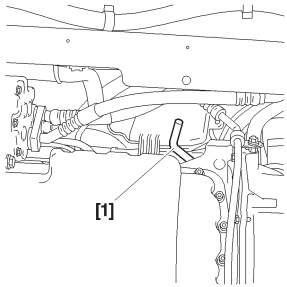


**Engine: WJY**

**Tools.**

| | | |
|---|---|---|
| **[1]** Flywheel locating peg | **: 7014-T.J** | |
| **[2]** H M8 screw | **: (-).0188.E** | **Tool kit C.0188** |
| **[3]** Injection pump setting peg **Ø 6 mm** | **: (-).0188.H** | |

After carrying out the necessary dismantling operations on the vehicle, proceed in the following manner:

Remove:
- The screws **(6)**, **(7)**, **(9)**, **(10)** and **(12)**.
- The upper casing **(8)**.
- The intermediate casing **(11)**.

**WARNING:** Refit the screw **(6)** equipped with a washer. *(Thickness 5 mm)*

- Turn the front RH wheel to turn the engine. *(Normal direction of rotation)*
- Bring the camshaft and injection pump pulleys to their setting point.
- Position the flywheel peg, using tool **[1]**. *(From below the vehicle)*
- Turn the engine until the peg **[1]** engages in the flywheel.

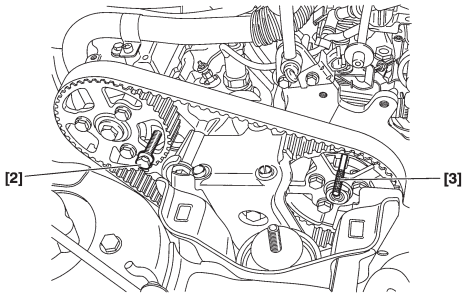


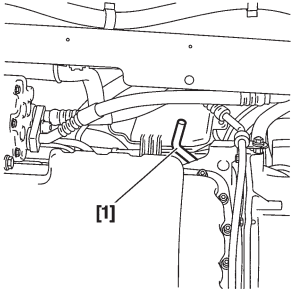


**Engine: WJY (continued)**

Peg:
- The camshaft hub, using tool **[2]**.
- The injection pump hub, using tool **[3]**.

**Impossible to peg the camshaft.**
Reset the valve timing *(See page 245)*.

**Possible to peg the camshaft, but not the injection pump.**
Carry out the following operations:
- Loosen the screws of the injection pump hub.
- Turn the injection pump hub.
- Insert the peg **[3]** into the setting hole.
- Tighten the screws of the injection pump hub. Tighten to **2,3 ± 0,2 m.daN**.

**ESSENTIAL: If setting the diesel injection pump proves impossible, reset the valve timing.** *(See page **251**)*

Remove:
- The tools **[1]**, **[2]** and **[3]**.
- The screw **(6)** and the washer.

Reassemble the components.

B1EP12WD | B1BP1S9C

Engine: WJY

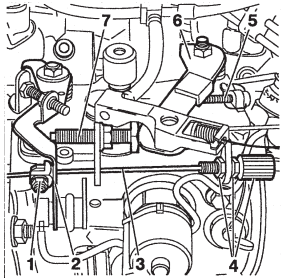


B1HP0K9C

**Adjusting the fast idle.**
**Engine cold.**
- Ensure that the lever **(2)** is up against its stop to the right.
- If not, adjust the tension of the cable **(3)** using the cable clamp **(1)**.
- Finish tensioning using the sleeve tensioner **(4)**.

**Engine hot.**
- Check that the cable **(3)** is in tension.

**Checking the thermostatic sensor.**
- There should be a minimum **6 mm** cable travel between a cold and a hot engine.

**Adjusting the accelerator control.**
**Prior conditions.**
- Engine hot *(cooling fan is engaged twice)*.

**Checking the accelerator cable tension.**
- Fully depress the accelerator pedal.
- Check that the lever **(6)** is against its stop **(5)** otherwise, alter the position of the pin.
- If not, adjust the position of the accelerator cable tensioning retaining pin.
- Ensure that in the idle position the lever **(6)** is against the stop **(7)**.

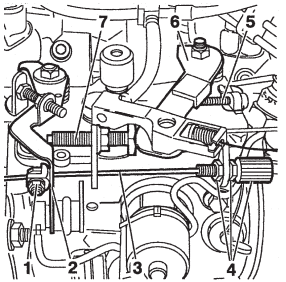


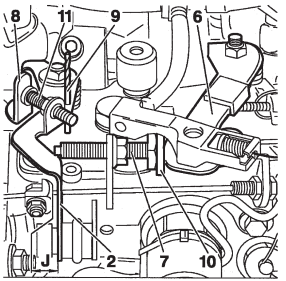


**Engine: WJY (continued)**

**Adjusting the anti-stall (residual output).**

- Insert a **3 mm** thick shim **(10)** between the throttle lever **(6)** and the anti-stall screw **(7)**.
- Push the stop lever **(8)**.
- Insert a **3 mm** diameter peg **(9)** in the lever **(2)**.
- Adjust the engine speed to **1500 rpm ± 100** using the stop screw **(7)**.
- Remove the shim **(10)** and the peg **(9)**.

**Adjusting the idle speed.**

- Adjust the speed using the idle adjustment screw **(11)**.
- Idling speed: **825 ± 25 rpm**.

**Checking the engine deceleration.**

- Move the throttle lever **(6)** to obtain an engine speed of **3000 rpm**.
- Release the throttle lever **(6)**.
- The deceleration should be between **2.5** and **3.5** seconds.
- The drop should be approximately **50 rpm** in relation to the idle speed.
- Deceleration too fast, *(the engine has a tendency to stall)* slacken the screw **(7)** by a quarter turn.
- Deceleration too slow, *(engine speed is greater than the idle speed)* tighten screw **(7)** by a quarter turn.

**NOTE:** In each case, check the idle speed for any necessary adjustments.

B1HP0K9C | B1HP0KAC

# FITTING DELPHI DIESEL INJECTORS

**XSARA**

**Engine: WJY**

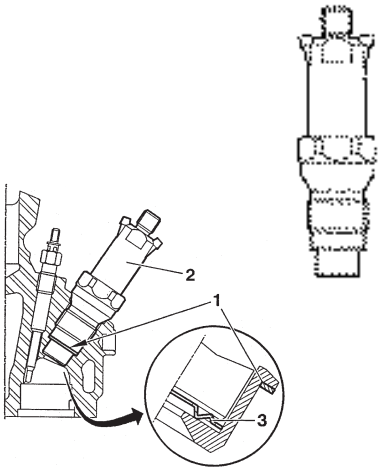


B1DP158C B1HP12VC

**Fitting an injector.**

- The copper seal **(1)** and the fire seal washer **(3)** are to be replaced each time they are removed.

**NOTE:** Fitting parts of different makes is **PROHIBITED**.

**WARNING:** Ensure that the fire seal washer **(3)** is fitted the right way round.

**Tighten the injector holder on the cylinder head to:**

**9 m.daN**

**[1]** Tool to remove/refit injectors **: 7007-T**

**[2]** **: 7008-T.A Tool kit 4123-T**

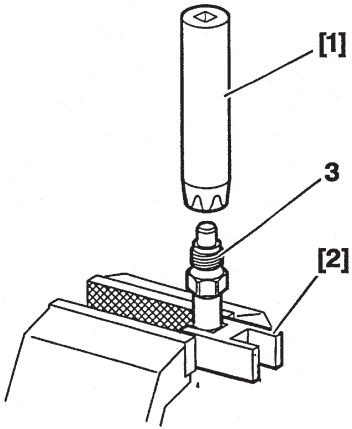


**(3)** Tighten lightly to prevent any distortion.

B1HP0YGC

| XSARA PICASSO | | | INJECTION PUMP SPECIFICATIONS (BOSCH and SIEMENS) | | | |
|---|---|---|---|---|---|---|
| Engines | | | Injection system | ECU | High pressure pump | Injectors |
| DV | 6 | TE | BOSCH | BOSCH EDC 16C3 | BOSCH CP 3.2 | 760680 |
| DW | 10 | TD | | BOSCH EDC 15C2 | BOSCH CP1 | 9625542580 |
| | | | SIEMENS (except PICASSO) | SIEMENS ECUSID801 | 5WS 40001 | 5WS40000 |
| | | ATED | BOSCH | BOSCH EDC 15C2 | BOSCH CP1 | 9625542580 |

# CHECKS: LOW PRESSURE FUEL SUPPLY CIRCUIT

C2 - C3

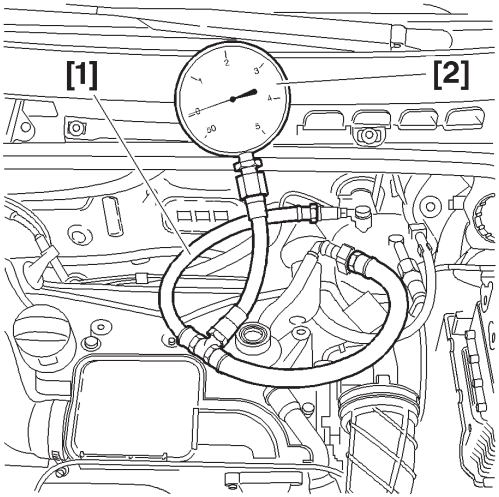


B1BP2NWC

**Engines: 8HX - 8HW**

**Tools.**

**[1] Ø 10 mm** low pressure connector **: 4215-T.**
**[2]** Pressure gauge for testing boost pressure **: 4073-T.A Tool kit 4073-T**

**IMPERATIVE: Respect the safety and cleanliness specific to high pressure diesel injection engines.**

Link tools **[1]** and **[2]** in series between the fuel high pressure pump and the fuel filter.

**ESSENTIAL: Check that the tool [2] is clean.**

Check the negative pressure according to the table below:

| Vacuum | Observations |
|---|---|
| **10 ±5 cmHg** | Engine driven by the starter motor |
| **20 ±5 cmHg** | Engine running under full load |
| **60 ±5 cmHg** | Supply circuit obstructed *(full tank strainer, piping, fuel filter)*. |

# CHECKS: LOW PRESSURE FUEL SUPPLY CIRCUIT



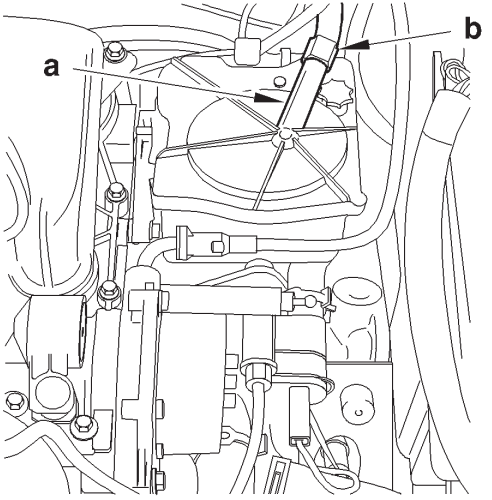


B1BP2PHC

**Engines: 8HV - 8HY - 9HZ - 9HY**

**Tools.**

**[1] Ø 10 mm** low pressure connector **: 4215-T.**
**[2]** Pressure gauge for testing boost pressure **: 4073-T.A** **Tool kit 4073-T**

**IMPERATIVE: Respect the safety and cleanliness specific to high pressure diesel injection engines.**

Remove the air filter duct.
Link tool **[1]** in series, downstream of the injectors, between the fuel high pressure pump and the fuel filter at **«a»** and **«b»**.

**WARNING:** Any checking of pressure downstream of the fuel filter is prohibited.
Switch on the ignition.

**ESSENTIAL: Check that the tool [2] is clean.**

Check the negative pressure according to the table below:

| Vacuum | Observations |
|---|---|
| **10 ± 05 cmhg** | Engine driven by the starter motor |
| **20 ± 20 cmhg** | Engine running under full load |
| **60 ± 05 cmhg** | Supply circuit obstructed *(full tank strainer, piping, fuel filter).* |

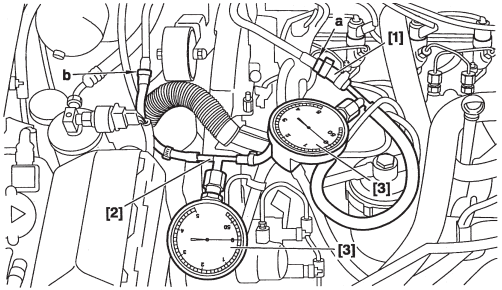


B1BP1TWD

**Engines: RHY - RHZ**

**Tools.**

| | | |
|---|---|---|
| **[1] Ø 10 mm** low pressure connector | **: 4215-T.** | |
| **[2] Ø 8 mm** low pressure connector | **: 4218 -T.** | |
| **[3]** Pressure gauge for testing boost pressure | **: 4073 -T** | **Kit 4073 -T** |

Connect the tool **[1]** between the booster pump and the fuel filter *(white mark at "**a**" on the fuel supply pipe)*.
Connect the tool **[2]** downstream of the diesel injectors, between the high pressure fuel pump and the fuel filter *(green mark at "**b**" on the fuel return pipe)*.

**WARNING: Any check of pressure downstream of the fuel filter is PROHIBITED.**

**Checks on pressure: static.**

- Switch on ignition
For **3 seconds** *(normal functioning)*:
- Fuel supply pressure shown by the pressure gauge **[3] = 1.8 ± 0.4 Bar.**
- Fuel return pressure shown by the pressure gauge **[3] = 0.5 ± 0.4 Bar.**

| XSARA PICASSO | CHECKS: LOW PRESSURE FUEL SUPPLY CIRCUIT |
|---|---|

**Engines: RHY - RHZ (continued)**

**Checks on pressure: dynamic.**
Engine running, at idle *(normal functioning)*:
- Fuel supply pressure shown by the pressure gauge **[3] = 2 ± 0.4 Bar.**
- Fuel return pressure shown by the pressure gauge **[3] = 0.7 ± 0.4 Bar.**

**Abnormal functioning**

| Fuel supply pressure | Fuel return pressure | Checks |
|---|---|---|
| Between **3** and **3.5 Bar** | **0,7 ± 0,2 Bar** | Check the condition of the diesel filter |
| More than **3.5 Bar** | Less than **0.7 Bar** | Check the low pressure regulator incorporated in the filter *(locked shut)*: replace. |
| More than **3.5 Bar** | More than **0.7 Bar** | Check the fuel return circuit *(pipe pinched or trapped…)* |
| Between **0.8** and **1.5 Bar** | Less than **0.7 Bar** | Check the fuel suppy circuit:<br>- Booster pump *(low pressure)*, piping. |

**Impossible to start the engine:**
Fuel supply pressure less than **0.8 Bar**:
- Check the low pressure regulator incorporated in the filter *(locked open).*
- Check the high pressure pump distribution valve *(locked shut).*

**Check: diesel injector return flow.** *(Table below)*

**Uncouple the diesel injector return pipe.**

| Check: | Observe: |
|---|---|
| The flow should be drop by drop. | Diesel injector functioning correctly. |
| Excessive fuel return. | Diesel injector locked shut. |

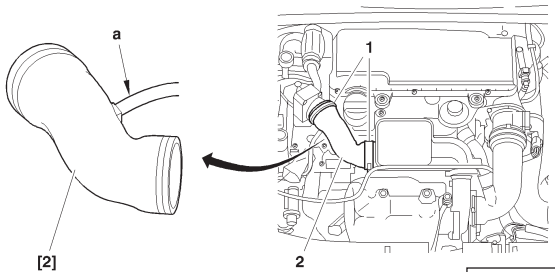


B1BP2NXD

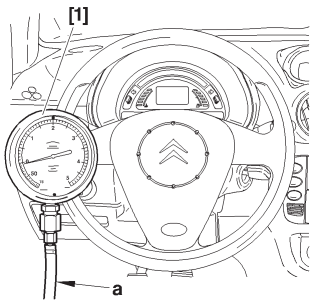


C5FP0F5C

**Engines: 8HX - 8HW**

**Tools.**

**[1]** Pressure gauge for checking boost pressure **: 4073-T.A**
**[2]** Sleeve for checking boost pressure **: (-).0171.F**

**Checks.**

**IMPERATIVE: Respect the following test conditions:**
**- Engine at operating temperature.**
**- Vehicle in running order.**
**- Engine under full load.**

**Preparation.**

Remove the clips **(1)**.
Fit the tool **[2]** in the place of the duct **(2)**.
Couple the sleeve **[2]** on the pressure gauge **[1]** using the tube **«a»**.

**Mode of operation.**

Position tool **[1]** in the vehicle.
Start the engine.
Engage first gear, start the vehicle.
Engage the gears up to third gear.
Decelerate to an engine speed of **1000 rpm**.
Check the pressure: **0,6 ± 0,05 bar *(1500 rpm)***.
Accelerate freely *(change from fourth gear to third gear)*.
Check the pressure: **0,9 ± 0,05 bar** *(between 2500 and 3500 rpm)*.
Remove tools **[1]**, **[2]** at **«a»**.
Reposition the tube **(2)** and tighten the clips **(1)**.

| C3 | CHECKS: TURBO PRESSURE |
|---|---|

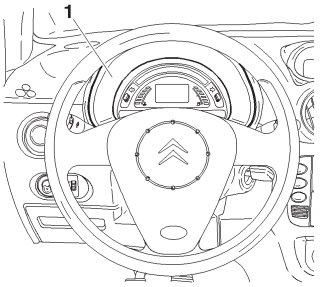


C5FP0EJC

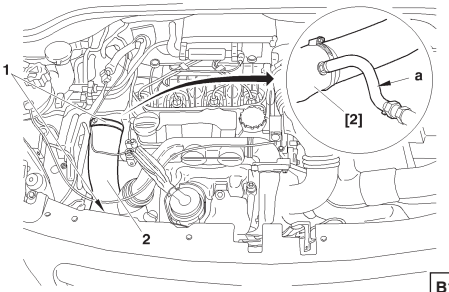


B1BP2NBD

**Engines: 8HV - 8HY**

**Tools.**

**[1]** Pressure gauge for checking boost pressure **: 4073-T.A**
**[2]** Sleeve for checking boost pressure **: (-).0171.F**

**Checks.**

**IMPERATIVE:** Respect the following test conditions:
- Engine at operating temperature.
- Vehicle in running order.
- Engine under full load.

**Preparation.**

Remove the clips **(1)**.
Fit the tool **[2]** in the place of the duct **(2)**.
Couple the sleeve **[2]** on the pressure gauge **[1]** using the tube **«a»**.

**Mode of operation.**

Position tool **[1]** in the vehicle.
Start the engine.
Engage first gear, start the vehicle.
Engage the gears up to third gear.
Decelerate to an engine speed of **1000 rpm**.
Check the pressure: **0,6 ± 0,05 bar *(1500 rpm)***.
Accelerate freely (*change from fourth gear to third gear)*
Check the pressure: **0,9 ± 0,05 bar** *(between 2500 and 3500 rpm)*.
Remove tools **[1]**, **[2]** at **«a»**.
Reposition the tube **(2)** and tighten the clip **(1)**.

**IMPERATIVE: Respect the safety and cleanliness requirements.**

**Preparation.**

**IMPERATIVE: Respect the following test conditions:**
**- Engine at operating temperature.**
**- Vehicle in running order.**
**- Engine under full load.**

Connect the diagnostic tool to the vehicle's diagnostic socket, carry out parameter measures.

**Mode of operation.**

Start the engine.
Engage first gear, start the vehicle.
Engage the gears up to third gear.
Decelerate to an engine speed of **1000 rpm**.
Check the pressure: **0,6 ± 0,05 bar *(1500 rpm)***.
Accelerate freely *(change from fourth gear to third gear)*.
Check the pressure: **0,9 ± 0,05 bar** *(between 2500 and 3500 rpm)*.

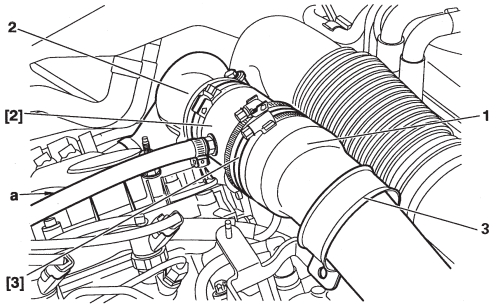


B1HP12JD

**Engine: RHZ**

**Tools.**

| | |
|---|---|
| **[1]** Pressure gauge for checking boost pressure | **: 4073-T.A Kit 4073-T** |
| **[2]** Sleeve for checking boost pressure | **: 4185-T** |
| **[3]** Adaptor sleeve | **: 4229-T** |

**Checks.**

**IMPERATIVE: respect the following checking requirements: Engine at running temperature. Vehicle in running order at full load.**

**Preparation.**

- Remove the collar fixing **(3)**.
- Insert the tool **[2]** connected with tool **[3]**, between the pipe **(1)** and the duct **(2)**.
- Position tool **[1]** in the vehicle.
- Connect the sleeve **[2]** to the tool **[1]** with its tube **«a»**.

**Procedure.**

- Start the engine.
- Engage first gear and start the engine.
- Engage the gears up to third gear.
- Decelerate to **1000 rpm**.
- Accelerate hard, and check the pressure: **0.6 ± 0.05 Bar *(1500 rpm)***.
- Accelerate freely in kick-down *(changing from fourth to third gear)*.
- Check the pressure: **0.95 ± 0.05 Bar** *(between 2500 and 3500 rpm)*.
- Remove the tools, reposition the pipe **(1)** and refit the collar **(3)**.

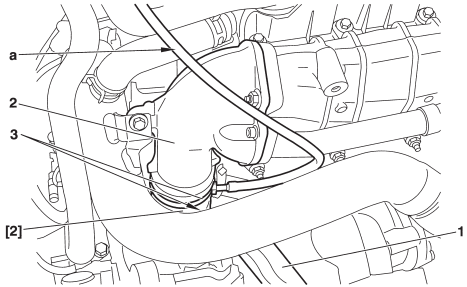


B1BP1ZXD

**Engine: RHY**

**Tools.**

**[1]** Pressure gauge for checking boost pressure **: 4073-T.A Kit 4073-T**
**[2]** Sleeve for checking boost pressure **: 4185-T**

**Checks.**
**IMPERATIVE: respect the following checking requirements: Engine at running temperature. Vehicle running at full load.**

**Preparation.**
- Remove the collar **(3**) and the sleeve.
- Insert the tool **[2]** between the pipe **(1)** and the duct **(2)**.
- Position tool **[1]** in the vehicle.
- Connect the pressure gauge **[1]** to the tool **[2]** with its tube **«a»** long enough for the gauge to be positioned inside the vehicle.

**Procedure.**
- Start the engine.
- Engage first gear and start the engine.
- Engage the gears up to third gear.
- Decelerate to **2000 rpm**.
- Gradually accelerate.
- Check the pressure: **0.95 ± 0.05 Bar**
- Remove the tools, refit the collars **(3)** and the sleeve.

| C2 - C3 | CHECKING THE AIR SUPPLY CIRCUIT |
|---|---|

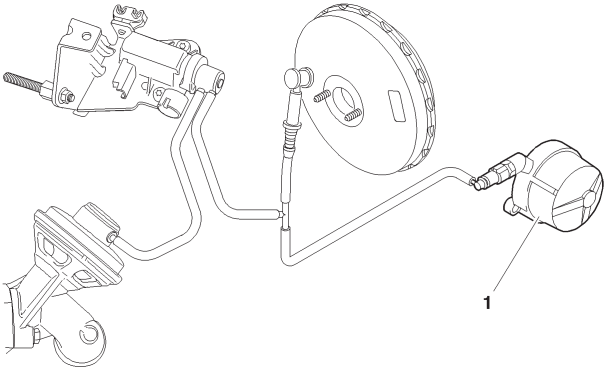


B1HP1K8D

**Engines: 8HX - 8HW - 8HY - 8HV**

**Tools.**

**[1]** Manual pressure-vacuum pump **: FACOM DA 16**

**Vacuum pump:**

- Connect the tool **[1]** onto the vacuum pump **(1)**.

- Start the engine.

- Wait 30 seconds.

The vacuum value should be **0.9 ± 0.1 bar** at idle.

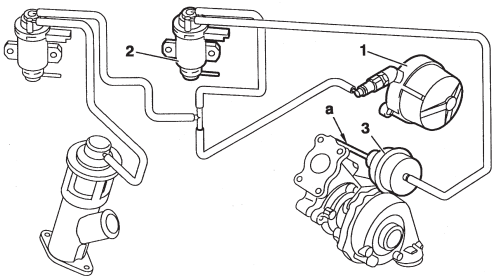


B1HP12FD

**Engines: RHY - RHZ**

**Tools.**

**[1]** Manual vacuum pump **: FACOM DA 16**

**IMPERATIVE: Respect the safety and cleanliness requirements.**

**Vacuum pump.**

- Connect the tool **[1]** on the vacuum pump **(1)**.
- Start the engine.
- Pressure should be **0.8 bar** at **780 rpm**.

**Boost pressure regulator electrovalve.**

- Connect the tool **[1]** between the electrovalve **(2)** and the valve **(3)** of the boost pressure regulator.

Compare readings with the values in the table below.

| Engine speed (rpm) | Pressure (Bar) |
|---|---|
| 780 | 0,6 |
| 4000 | 0,25 |

**Pressure regulator valve.**

- Connect the tool **[1]** on the valve **(3)**.
- Appy a pressure of **0.5 bar** to activate the rod **"a"**:
- Rod **"a"** should be moved **12 mm**.

# C2 - C3 CHECKS: EXHAUST GASES RECYCLING CIRCUIT

**Engines: 8HX - 8HW**

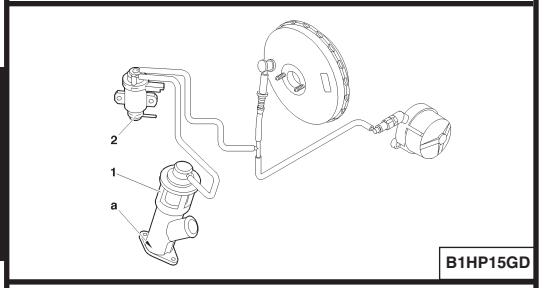


**Engines: 8HV - 8HY**

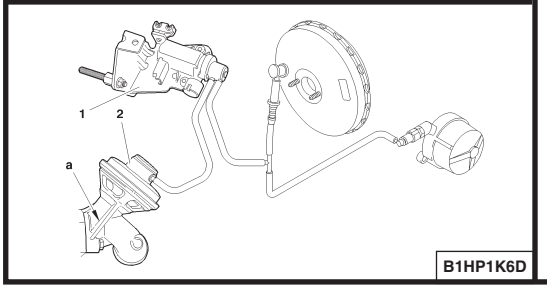


**Tools.**

**[1]** Manual pressure-vacuum pump **: FACOM DA 16**

**IMPERATIVE: Respect the safety and cleanliness specific to high pressure diesel injection (HDi) engines.**

**EGR valve.**

Connect tool **[1]** on the capsule take-off **(2)**.
Apply a vacuum of approx. **0,6 bar** several times to activate the rod **«a»**.
In abruptly suppressing the vacuum, the valve should click and lock itself back on its seating.

**Regulation electrovalve (EGR). (Engine: 8HX-8HW).**

Check to be performed between the electrovalve **(1)** and the EGR valve **(2)**.
Link the tool **[1]** in series, between the electrovalve **(1)** and the capsule **(2)**.
Compare the values noted with those in the table below.

**Regulation electrovalve (EGR). (Engine: 8HV-8HY).**

Check to be performed between the electrovalve **(2)** and the EGR valve **(1)**.
Link the tool **[1]** in series, between the electrovalve **(2)** and the capsule **(1)**.
Compare the values noted with those in the table below.

| Engine speed (rpm) | Vacuum value |
|---|---|
| 780 | 0,5 |
| 2500 | 0 |

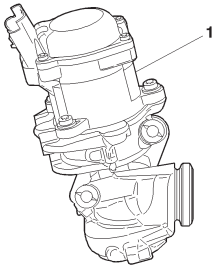


B1HP1UPC

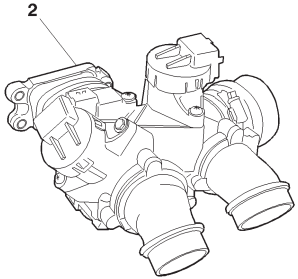


B1HP1UQC

**Engines: 9HZ - 9HY**

**Exhaust gas recycling (EGR) valve.**

**(1)** Exhaust gas recycling (EGR) electrovalve

**NOTE:** The engine ECU pilots the EGR valve.

Perform the check with the aid of a diagnostic tool.
Carry out the following operations with the diagnostic tool:
**- «INJECTION» menu.**
**- Actuator tests.**
**- EGE electrovalve.**
Check that you can hear the click from the EGR regulation electrovalve.

**Double butterfly housing (vehicle with particle filter).**

**(2)** Double butterfly housing.

Perform the check with the aid of a diagnostic tool.
Carry out the following operations with the diagnostic tool:
**- «INJECTION» menu.**
**- Actuator tests.**
**- Butterfly.**
**- EGR exchanger butterfly.**
Check that you can hear the click from the double butterfly housing.

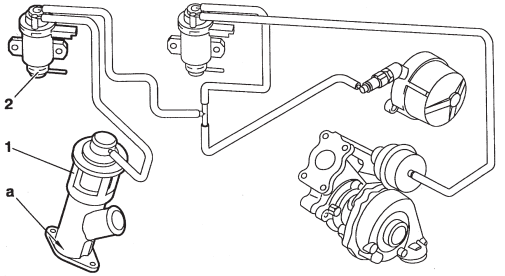


B1HP12GD

**Engines: RHY - RHZ**

**Tools.**

**[1]** Manual vacuum pump **: FACOM DA 16**

**IMPERATIVE: Respect the safety and cleanliness requirements.**

**EGR valve.**
- Connect the tool **[1]** to the capsule union **(1)**.
- Apply several times in succession a vacuum of approx. **0.6 bar** to activate the rod **"a"**.
- In abrupt reaction to the vacuum, the valve should close on its seating with a clicking noise.

**Exhaust gas reycling (EGR) electrovalve.**
- Check, not under load, between the electrovalve **(2)** and the EGR valve **(1)**.
- Connect the tool **[1]** between the electrovalve **(2)** and the capsule **(1)**.
- Compare readings with the values in the table below.

| Engine speed (rpm) | Vacuum value |
|---|---|
| 780 | **0,5** |
| 2500 | **0** |

| PARTICLE FILTER SAFETY AND CLEANLINESS REQUIREMENTS | ALL TYPES |
|---|---|

**General.**

**ESSENTIAL: Given the very high pressures prevailing in the fuel high pressure circuit (1600 Bars), respect the following regulations.**

- It is forbidden to smoke in the immediate proximity of the high pressure circuit during a repair.
- Avoid working close to flames or sparks.

When the engine is running:
- Do touch the fuel high pressure circuit.
- Always keep out of range of possible projections of fuel, which could cause serious injuries.
- Do not place your hand near to any leak on the fuel high pressure circuit.
- After the engine has stopped, wait 30 seconds before starting any operation.

**NOTE:** The waiting time is necessary to allow the fuel high pressure circuit to return to atmospheric pressure.

**Safety rules.**

**IMPERATIVE: Wait at least an hour before starting any repair on the exhaust line.**

Forced regeneration of the particle filter:
- Check that there are no aerosols or inflammable products inside the vehicle's boot.
- Wear high temperature gloves.
- Connect the vehicle to a gas extractor approved for this type of operation.

**IMPERATIVE: In the absence of the required installations, carry out the forced regeneration of the particle filter outside the workshop, in a concreted area well away from any inflammable materials. Place the vehicle in the high position.**

| ALL TYPES | PARTICLE FILTER SAFETY AND CLEANLINESS REQUIREMENTS |
|---|---|

**Operations on the fuel additive circuit.**

**IMPERATIVE: For all operations on the additive circuit, wear protective goggles and gloves that are resistant to hydrocarbons.**

The work area must be ventilated.

In the event of any significant dispersion of additive:

- Wear a breathing mask for filtering the particles.
- Recover as much of the product as possible.
- Place the product thus recovered in an appropriately labelled container.
- Wash the soiled area with copious amounts of water.
- Dispose of materials and solid residues in an authorised recovery point.

**IMPERATIVE: The filling kit should be recycled following a repair. All «Eolys» additive containers that have been opened should be disposed of.**

**Cleanliness rules.**

**ESSENTIAL: The operator should wear clean overalls.**

Before working on the injection circuit, it may be necessary to clean the unions of the following sensitive components *(see corresponding operations)*.

- Fuel filter.
- Fuel high pressure pump.
- Fuel high pressure regulator.
- Fuel high pressure common injection rail.
- Fuel high pressure piping.
- Diesel injector carriers.

**IMPERATIVE: After dismantling, immediately blank the unions of the sensitive components with plugs, to prevent any ingress of impurities.**

**Tools.**

Diagnostic stations **: LEXIA or PROXIA**

**Imperative: Respect the safety and cleanliness requirements.**

**Forced regeneration of the particle filter.**
**IMPERATIVE: Respect the safety and cleanliness requirements specific to HDi engines.**
**ESSENTIAL: Connect the vehicle to a gas extractor approved for this type of operation.**
**In the absence of the required installations, carry out the forced regeneration of the particle filter outside the workshop, in a concreted area well away from any inflammable materials. Place the vehicle in the high position.**
**WARNING:** Check that the fuel level is sufficient *(at least **20 litres**)*.
Start the engine and allow it to warm up *(60°C minimum)*.
Connect the diagnostic tool to the vehicle's central socket.
Trigger the regeneration cycle, with the diagnostic tool.
Automatic running of the regeneration cycle of the particle filter:
- Autocheck by the engine ECU.
- Stabilisation of engine speed at **4000 rpm**, operating with post injection.
- Change to idling speed *(for 30 seconds)*.
- Stabilisation of engine speed at **3000 rpm**, checking of the efficiency of the regeneration of the particle filter.
- Change to idling speed.

**NOTE:** Let the engine run at idling speed for the benefit of cooling.
Stop the engine.
**IMPERATIVE: Wait for at least an hour before any operation on the exhaust line.**

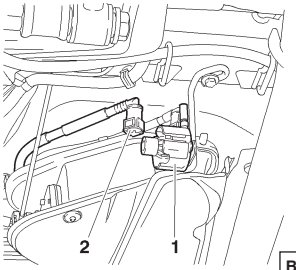


B1HP1UVC

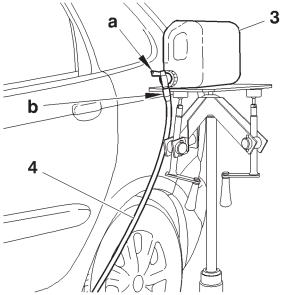


C4BP1EGC

**Imperative: Respect the safety and cleanliness requirements.**

**Tools.**

Filling kit comprising the following items:

| | | |
|---|---|---|
| **1** Container of Eolys | **2** Filters | **2** Tubes |
| **1** Empty container | **2** Hooks | **1** Adaptor |

Filling.

**IMPERATIVE: Respect the safety and cleanliness requirements specific to HDi engines.**

**IMPERATIVE: For all operations on the additive circuit, wear protective goggles and gloves that are resistant to hydrocarbons.**

Place the vehicle on a lift.

Disconnect the battery negative terminal.

Unclip the the factory filler connector **(1)**.

Couple the container of additive to the tube **(2)** using the adaptor and the tube *(with tap)* from the filling kit.

Screw the filler connector on the additive container **(3)** at **«b»**.

Place the additive container **(3)** on the component lift.

Open the tap located on the filler connector at **«a»**.

Tilt the additive container **(3)** *(to facilitate the end of filling).*

Close the tap at **«a»**.

Remove the filler connector and the tube **(4)**.

Couple the tube **(2)**.

Reconnect the battery negative terminal.

**IMPERATIVE: The filling kit should be recycled after this operation. Any «Eolys» additive containers that have been opened should not be kept.**

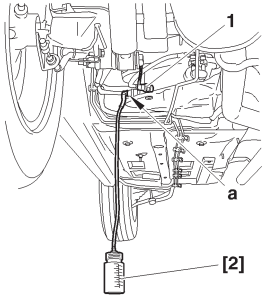


B1HP1UTC

**Engine: 9 HZ**

**IMPERATIVE: Respect the safety and cleanliness requirements.**

**Tools.**

| | | |
|---|---|---|
| **[1]** Manual pressure/vacuum pump | **: FACOM DA 16** | |
| **[2]** Additive container | **: (-).1613.G** | **Kit 1613** |

**Checks.**

**IMPERATIVE: Respect the safety and cleanliness requirements specific to HDi engines.**
**IMPERATIVE: For all operations on the additive circuit, wear protective goggles and gloves that are resistant to hydrocarbons.**
Place the vehicle on a lift.
Raise the vehicle
To test the flow of the additive pump :
Uncouple the tube **(1)**.
Couple tool **[2]** on the outlet **«a»** of the additive reservoir.
Operate for **50 seconds** the actuator test **«Additive pump»** with the aid of **LEXIA or PROXIA**.

**IMPERATIVE: The volume collected by the tool [2] should be 20 ± 5 ml.**

**NOTE:** Replace the additive pump if it is defective.
Couple the tube **(1)**.
Operate the actuator test **«Filling the tube: additive pump – additive injector»**, with the aid of **LEXIA** or **PROXIA**.

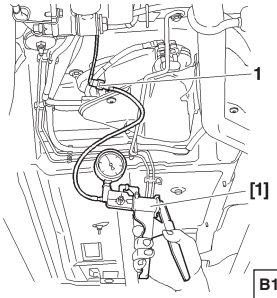


B1HP1UUC

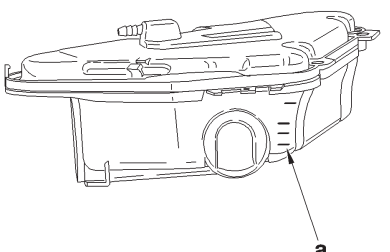


B1KP019C

**Sealing of the additive injector.**

Couple tool **[1]** to the tube **(1)**.
Action the manual pump **[1]**.

**WARNING:** The additive injector should open at a pressure of **100 ± 20 Bars**.

Action the manual pump in vacuum **[1]** at **800 m.bars**.

**WARNING:** The downstream pressure should not fall rapidly.

**NOTE:** Replace the fuel tank if the injector is defective.

Couple the tube **(1)**.
Operate the actuator test **«Filling the tube: additive pump – additive injector»**, with the aid of **LEXIA** or **PROXIA**.

**Check the additive level.**

The checking of the additive level is done with reference to the gradations **«a»** marked on the additive reservoir.
The top graduation indicates maximum filling ***(3 Litres)***.
The difference between the two gradations equates to **0,25 Litres**.

| SPARKING PLUGS | | | | | | | | | ALL TYPES |
|---|---|---|---|---|---|---|---|---|---|
| Vehicles | | Engine type | BOSCH | Electrode gap setting | EYQUEM | Electrode gap setting | CHAMPION | Electrode gap setting | Tightening torque |
| C2 | 1.1i | HFX | FR7 DE | 0,9 ± 0,1 | RFN 58 LZ | 0,9 ± 0,05 | RC 8 YLC | 0,9 ± 0,05 | 2.5 ± 0,2 mda.N |
| | 1.4i | KFV | | | | | | | |
| | 1.6i 16V | NFU | FR7 ME | | RFN 58 HZ | | | | |
| C3 | 1.1i | HFX | FR7 DE | | RFN 58 LZ | | RC 8 YLC | | |
| | 1.4i | KFV | | | | | | | |
| | 1.4i 16V | KFU | VR8 SE | 0,9 ± 0,05 | | | | | |
| | 1.6i 16V | NFU | FR7 ME | 0,9 ± 0,1 | RFN 58 HZ | | | | |
| C3 PLURIEL | 1.4i | KFV | FR7 DE | | RFN 58 LZ | | RC 8 YLC | | |
| | 1.6i 16V | NFU | FR7 ME | | RFN 58 HZ | | | | |
| XSARA | 1.4i | KFW | FR7 DE | | RFN 58 LZ | | RC 8 YLC | | |
| | 1.6i 16V | NFU | FR7 ME | | RFN 58 HZ | | | | |
| | 2.0i 16V | RFN | FR8 ME | | RFN 52 HZ | | REC 9 YCL | | |
| | | RFS | FR6 DE | | RFN 62 LZ | | | | |
| XSARA PICASSO | 1.6i 90 hp | NFV | | | RFN 58 LZ | | | | |
| | 1.6i 100 hp | | FR7 DE | 0,9 ± 0,1 | | | RC 8 YLC | | |
| | 1.8i 16V | 6FZ | FR8 ME | | RFN 52 HZ | | REC 9 YCL | | |
| | 2.0i 16V | RFN | | | | | | | |

# SPEEDOMETER

An E.E.C. decree of 25 June 1976, regulates the speed displayed by the speedmeter in relation to the actual speed travelled.

**This decree stipulates:**

- The speed indicated by a speedometer must never be lower than the actual vehicle speed.
- Between the speed displayed «**SD**» and the speed travelled «**ST**», there must always be the following relationship:

**ST < SD < 1.10 ST + 4 Kph**

Example: For an actual speed of **100 Kph** the speed displayed by the speedometer may be between **100** and **114 Kph**.
The speed indicated by the speedometer may be influenced by:

- The speedometer.
- The tyres fitted to the vehicle.
- The final drive ratio.
- The speedometer drive ratio.

Any of these components can be checked without removing them from the vehicle *(see information note **N° 78-85 TT of 19 October 1978**)*.
**NOTE:** Before replacing the speedometer, check the conformity of the following points:
- The tyres fitted to the vehicle.
- The gearbox final drive ratio.
- The speedometer drive ratio.

| CLUTCH SPECIFICATIONS | | | | C2 |
|---|---|---|---|---|
| | **1.1i** | **1.4i** | **1.6i 16V** | **1.4 HDi** |
| **Engine type** | **HFX** | **KFV** | **NFU** | **8HX** |
| **Gearbox type Supplier** | BVM | BVM/BVMP **(*)** | BVM/BVMP **(*)** | BVM/BVMP **(*)** |
| | MA 5/S | MA 5 N/L | MA 5 S/L | MA 5/0 |
| **Mechanism / type** | VALEO | | LUK | |
| **Engine type** | 180 CP0 3400 | | 200 P 3900 | |
| **Bearing supplier / height** | SKF 17 mm | | | |
| **Clutch disc** | 11 R 10 | | ? | ? |
| **Ø of lining. Ext/Int** | 180/127 | | 200/134 | |
| **Quality of lining** | 408 | | | |

**(*)** : **BVM** = Manual gearbox.

: **BVMP** = Piloted manual gearbox.

| C3 - C3 PLURIEL | CLUTCH SPECIFICATIONS | | | | | | | |
|---|---|---|---|---|---|---|---|---|
| | 1.1i | 1.4i | 1.4i 16V | 1.6i 16V | 1.4 HDi | | 1.4 HDi 16V | |
| **Engine type** | HFX | KFV | KFU | NFU | 8HX | 8HW | 8HV | 8HY |
| **Gearbox type Supplier** | MA/5 | | | | | | BE4/5 | |
| **Mechanism / type** | VALEO | | ? | LUK | | | | |
| **Engine type** | 180 CPO 3400 | | 200 MF 3850 | 200 P 3900 | | | 230 P 4700 | |
| **Clutch disc** | 11 R 10 X | | 200 VTB | | | | | |
| **Ø Garniture.Ext/Int** | 180/127 | | ? | 200/134 | | | 228/155 | |
| **Quality of lining** | F408 | | | | | | | |

| CLUTCH SPECIFICATIONS | | | | XSARA |
|---|---|---|---|---|
| | 1.4i | 1.6i 16V | 2.0i 16V | |
| **Engine type** | **KFW** | **NFU** | **RFN** | **RFS** |
| **Gearbox type Supplier** | MA/5 | MA/5 | BE4/5 | |
| **Mechanism / type** | VALEO | | | |
| **Engine type** | 180CPO 3400 | 200 CPR 3800 | 230 DNG 4700 | 215 DT 5250 |
| **Clutch disc** | 180 XJF 73 C | 200X(D95) 11A12X | 230 DNG 4700 | 215 FD 95 |
| **Ø Garniture.Ext/Int** | 180/127 | 200/137 | 228/155 | 215/147 |
| **Quality of lining** | F 408 | F 808 | | |

| XSARA | CLUTCH SPECIFICATIONS | | | |
|---|---|---|---|---|
| | 1.4 HDi | 1.9 D | 2.0 HDi | |
| Engine type | 8HZ | WJY | RHY | RHZ |
| Gearbox type Supplier | BE4/5 | | | |
| Mechanism / type | LUK | | | |
| Engine type | 200 P 4200 | 200 P 3700 | 230 P 4700 | 235 T 5700 |
| Clutch disc | | 215 F (D 93) 22 BX | 228 | 228D |
| Ø Garniture.Ext/Int | 200/134 | 200/134 | 230/155 | 235/155 |
| Quality of lining | F 408 | | | F202 |

| CLUTCH SPECIFICATIONS | | | | | | XSARA PICASSO |
|---|---|---|---|---|---|---|
| | 1.6i | 1.8i 16V | 2.0i 16V | 1.4 HDi 16V | | 2.0 HDi |
| Engine type | NFV | 6FZ | RFN | 9HZ | 9HY | RHY |
| Gearbox type Supplier | BE4/5 | | | | | |
| Mechanism / type | VALEO | | | | | LUK |
| Engine type | 200 DNG 3800 | 230 DNG 4700 | 215 DT 5250 | 225 DNG 5100 | | 230 P 4700 |
| Clutch disc | 200X(D95)<br>11A12X | 230 DNG 4700 | 215 FD 95 | | | 228 |
| Ø Garniture.Ext/Int | 200/137 | 228/155 | 215/147 | 225/150 | | 230/155 |
| Quality of lining | F410 | F 808 | | F 810 DS | | F408 |

# CLUTCH SPECIFICATIONS

**Engines: HFX – KFV – KFU – NFU – 8HX – 8HW – 8HV – 8HY**

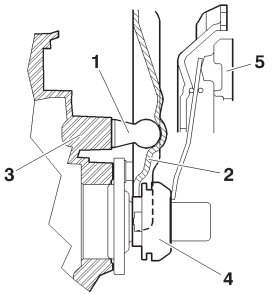


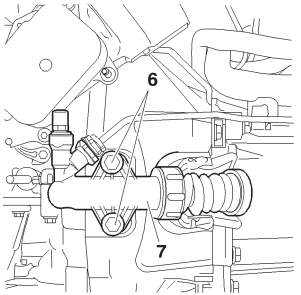


**NOTE:** All the clutches are «**push**» type with hydraulic control.

**Description.**

The declutch control has a declutch fork mounted on a ball-joint.
**(1)** The ball-joint is screwed into the clutch casing.
**(2)** Declutch fork.
**(3)** Clutch casing.
**(4)** Bearing.
**(5)** Clutch plate.

The clutch control slave cylinder **(7)** is fixed by two screws **(6)** onto the exterior of the clutch casing.

**Tightening torques (m.daN).**

| | |
|---|---|
| - Fixing of clutch plate / engine flywheel | **: 2 ± 0,2** |
| - Fixing of clutch control slave cylinder / clutch housing | **: 2 ± 0,25** |
| - Fixing of engine flywheel / crankshaft | |
| Pre-tightening | **: 1,7 ± 0,1** |
| Angular tightening | **: 70° ± 5°** |

B2BP047C | B2BP04QC

**Engines: KFW - NFU - NFV - 6FZ - RFN - RFS - 8HZ - 9HZ - 9HY - WJY - RHY - RHZ**

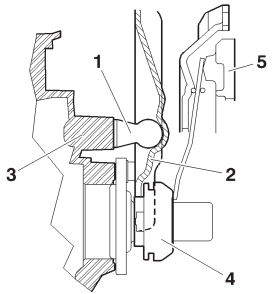


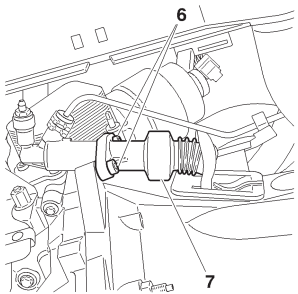


**NOTE:** All the clutches are «**push**» type with hydraulic control.

**Description.**

The declutch control has a declutch fork mounted on a ball-joint.
**(1)** The ball-joint is screwed into the clutch casing.
**(2)** Declutch fork.
**(3)** Clutch casing.
**(4)** Bearing.
**(5)** Clutch plate.

The clutch control slave cylinder **(7)** is fixed by two screws **(6)** onto the exterior of the clutch casing.

**Tightening torques (m.daN).**

| | |
|---|---|
| - Fixing of clutch plate / engine flywheel | **: 2 ± 0,2** |
| - Fixing of clutch control slave cylinder / clutch housing | **: 2 ± 0,25** |
| - Fixing of engine flywheel / crankshaft | |
| Pre-tightening | **: 1,75 ± 0,1** |
| Angular tightening | **: 75° ± 5°** |
| Checking torque | **: 6,3 ± 2,2** |

B2BP047C | B2BP05SC

Engines: KFW - NFU - 6FZ - RFN - RFS - 8HX - 9HZ - 9HY - WJY - RHY - RHZ



## «PUSH» clutch

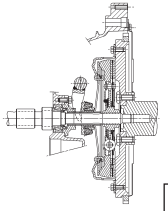

B2BP001C

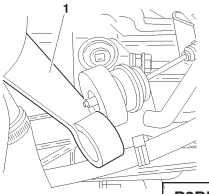


B2BP002C

## «PULL» clutch

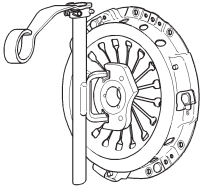

B2BP002C

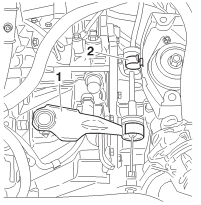


B2BP03BC

**Clutch cable.**

**Removing.**

Uncouple the cable from the lever **(1)**.

Unclip the cable from the gearbox by actioning the side tabs **(2)**.

Detach the cable from the bulkhead.

Remove the clip **(3)**.

Uncouple the cable from the clutch pedal.

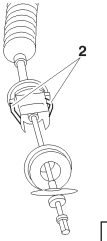


B2BP02VC

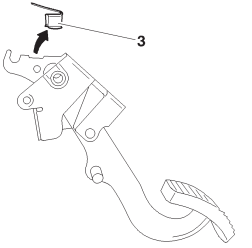


B2BP02WC

**Engines: KFW - NFU - 6FZ - RFN - RFS - 8HX - 9HZ - 9HY - WJY - RHY - RHZ**

**«PUSH» clutch**

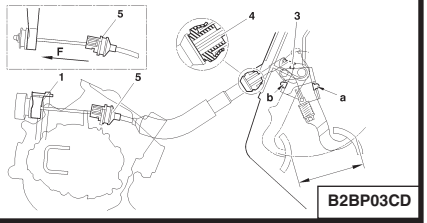


B2BP03CD

**«PULL» clutch**

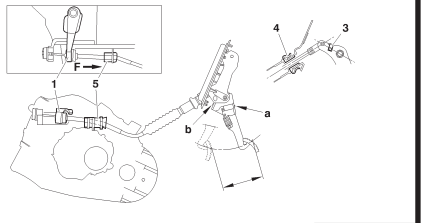


B2BP03DD

**Refitting.**

Place the pedal in the high position *(contact at **"a")***.
Attach the cable yoke on the hook of the clutch pedal.
Fit a new clip **(3)**.
Fit the end-piece **(4)** to the bulkhead *(fit with **G6** grease)*.
Clip the end-piece **(5)** on the gearbox.
Couple the cable to the lever **(1)**.
Depress the clutch cable several times to lodge the cable in place.
Check that the end-piece (4) is correctly lodged on the bulkhead.
Check the operation of the automatic adjusting system.
After fitting the cable, pull the clutch lever in the inverse direction *(direction **F**)*, the lever should move back when pulled by hand.
Press the clutch pedal very lightly and repeat the same operation. The lever should not move back.

**WARNING:** If a system blockage is detected when checking, or if the pedal has been removed, the pedal position must be adjusted. The correct positioning of the pedal is obtained by the angular displacement of the stop supports **"a"** and **"b"**.

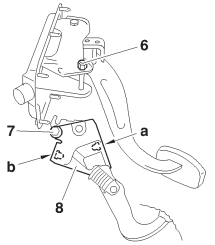


**Adjusting the pedal height.**

Loosen the nut **(6)** and the screw **(7)**.
Using a lever, raise the stop support **(8)** to its highest position. In this position, there should be a substantial free play in the pedal.
Lower the support until there is a free play of **2 ± 1 mm**.
Tighten the nut **(6)** and the screw **(7)**.
Check that the clutch cable sleeve can move freely.
At rest, the clutch cable sleeve should be free and able to lengthen and shorten.

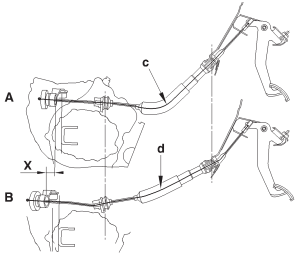


**Clutch pedal travel.**

The automatic clutch wear adjustment system has no manual adjustment.
Pedal travel is identical on all models: **154 ± 5 mm**.
The adjustment is achieved by reducing the length of the cable sleeve.
**WARNING:** Automatic adjustment of the pedal travel is accompanied by a modification of the curvature of the cable sleeve. Do not add any supplementary fixing points or alter the routing in any way.

**«c»** Routing of new cable.
**«b»** Routing after adjustment of play.
**«x»** Clutch wear.

B2BP03EC | B2BP03FD

## Bleeding the hydraulic clutch control

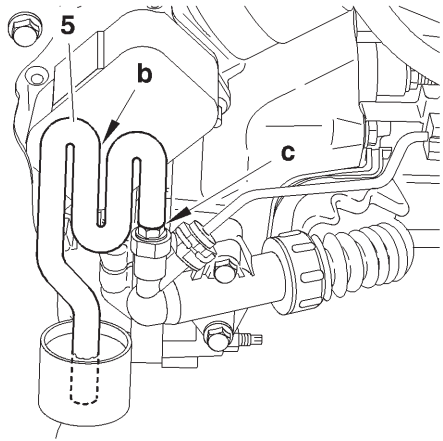


B2BP04XC

**IMPERATIVE: Use only new brake brake fluid that is not emulsified, avoid any ingress of impurities into the hydraulic circuit.**

**IMPERATIVE: Do not use automatic bleeding equipment *(risk of the brake fluid emulsifying in the hydraulic circuit).***

Couple a transparent tube **(5)** on the bleed screw, at **«c»**.

Submerge the end of the tube **(5)** in the recipient containing the brake fluid, located below the level of the clutch slave cylinder.

Use the transparent tube **(5)** to act as a siphon, at **«b»**.

**WARNING:** the end of the tube **(5)** must be submerged in the brake fluid.

Open the bleed screw, at **«c»**.

## Bleeding the hydraulic clutch control

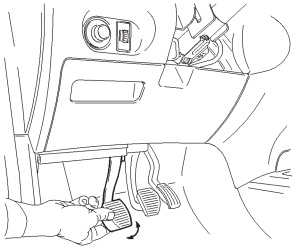

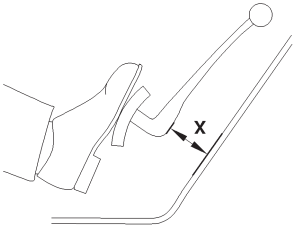


Action the clutch pedal manually through its full travel: **7 times rapidly** down and up.
Allow the clutch pedal to come back up to its high position.
Fill the brake fluid reservoir to the maximum of its capacity.
Open the bleed screw, at **«c»**.
Action the clutch pedal manually through its entire travel: **7 times** rapidly down and up.
The last time, keep the clutch pedal fully down.
Reclose the bleed screw, at **«c»**.
If necessary, repeat the operation.
Top up the brake fluid to the MAX. level of the brake fluid reservoir.
Work the clutch vigorously **40 times**.
Start the engine.
Apply the handbrake.
Engage a gear.
Check that the clutch starts to engage at a dimension **(X)** greater than or equal to **45 mm** *(the dimension **(X)** is given as a guide).*
Repeat the bleed operations if necessary.

C5FP0FQC | B2BP04YC

| GEARBOX AND TYRE SPECIFICATIONS | | | | | C2 |
|---|---|---|---|---|---|
| Manual gearbox | | | | | |
| | Petrol | | | Diesel | |
| | 1.1i | 1.4i | | 1.4 HDi | |
| **Engine types** | **HFX** | **KFV** | | **8HX** | |
| **Tyres-rolling** | 165/70 R14 | 165/70 R14 | 185/55 R14 | 165/70 R14 | 185/55 R15 |
| **Circumference** | 1,804 m | 1,804 m | 1,781 m | 1,804 m | 1,781 m |
| **Gearbox type** | MA 5/S | MA 5/N | MA 5/L | MA 5/0 | |
| **Gearbox ident. plate** | 20 CP 20 **PRO 9919 →** | 20 CP 21 **PRO 9919 →** | 20 CP 16 **PRO 9919 →** | 20 CP 55 **PRO 9919 →** | 20 CP 67 **PRO 9919 →** |
| **Reduction box torque** | 16x65 | | 14X60 | 17X61 | |
| **Speedometer ratio** | 21x18 | | | | |

| C2 | GEARBOX AND TYRE SPECIFICATIONS | | | | | |
|---|---|---|---|---|---|---|
| | Piloted manual gearbox | | | | | |
| | Petrol | | | | | Diesel |
| | 1.4i | | 1.6i 16V | | | 1.4 HDi |
| **Engine types** | KFV | | NFU | | | 8HX |
| **Tyres-rolling** | 165/70 R14 | 185/55 R15 | 185/55 R14 | 195/45 R16 | 185/70 R15 | 165/70 R14 |
| **Circumference** | 1,804 m | 1,781 m | 1,781 m | 1,772 m | 1,804 m | 1,804 m |
| **Gearbox type** | MA 5/N | | MA 5/S | | MA 5/L | MA 5/0 |
| **Gearbox ident. plate** | 20 CP 21<br>PRO 9786 → | | 20 CP 64<br>PRO 9786 → | | 20 CP 66<br>PRO 9786 → | 20 CP 65<br>PRO 9786 → |
| **Reduction box torque** | 16x65 | | 16x63 | | 14x60 | 16X63 |
| **Speedometer ratio** | 21x18 | | | | | 21x18 |

| GEARBOX AND TYRE SPECIFICATIONS | | | | | | C3 |
|---|---|---|---|---|---|---|
| **Manual gearbox** | **Petrol** | | | | | |
| | **1.1i** | **1.4i** | | | | **1.6i 16V** |
| | | | | **AUTOMATIC** | | |
| **Trim level** | **X - SX - Exclusive** | **X - SX** | **Exclusive** | **X - SX** | **Exclusive** | **X - SX Exclusive** |
| **Engine type** | **HFX** | **KFV** | | | | **NFU** |
| **Tyres-rolling - Circumference** | 165/70 R 14 1,804 m | | 185/60 R15 1,828 m | 165/70 R 14 1,804 m | 185/60 R15 1,828 m | |
| **Gearbox type** | MA/5 | | | AL4 | | MA/5 |
| **Gearbox ident. plate** | 20 CP 14 | 20 CP 15 ou **(*)** | | 20 TP 75 | | 20 CP 58 |
| **Reduction box torque** | 14x60 | 16x63 | | 21x73 | | 17x64 |
| **Speedometer ratio** | 21x18 | | | | | |
| | u **Diesel** | | | | | |
| | **1.4 HDi** | | | **1.4 HDi 16V** | | |
| **Trim level** | **X - SX - Exclusive** | | | | | |
| **Engine type** | **8HX** | **8HW** | | **8HV** | **8HY** | |
| **Tyres-rolling - Circumference** | 165/70 R14 1,804 | | | 185/60 R15 1,828 m | | |
| **Gearbox type** | MA/5 | | | BE4/5 | | |
| **Gearbox ident. plate** | 20 CP 54 **(2)** | | | 20 DM 25 | 20 DM 26 | |
| **Reduction box torque** | 17x61 | | | 19x72 | 19x77 | |
| **Speedometer ratio** | 21x18 | | | 22x19 | | |

**(1) Export et DAIC** = 20 CP 16 (14X60) (21X18) - **(2) EXPORT et DAIC** = 20 CP 55 - 20 CP 72 (16X65) (21X18).

| C3 | GEARBOX AND TYRE SPECIFICATIONS | | |
|---|---|---|---|
| | Piloted manual gearbox | | |
| | Petrol | | Diesel |
| Trim level | 1.4i 16V | 1.6i 16V | 1.4 HDi |
| Engine type | KFU | NFU | 8HX |
| Tyres-rolling Circumference | 185/60 R15<br>1,828 m | | 165/70 R14<br>1,804 m |
| Gearbox type | MA/5 | | |
| Gearbox ident. plate | 20 CP 56 | | 20 CP 65 |
| Reduction box torque | 17x64 | | 16x63 |
| Speedometer ratio | | | 21x18 |

| GEARBOX AND TYRE SPECIFICATIONS | | | C3 PLURIEL |
|---|---|---|---|
| | Petrol | | Diesel |
| | 1.4i | 1.6i 16V | 1.4 HDi |
| **Engine types** | **KFV** | **NFU** | **8HX** |
| **Tyres-rolling Circumference** | | | |
| **Gearbox type** | MA/5N | MA/5S | MA/50 |
| **Gearbox ident. plate** | 20 CP 60 (m) **(1)** | 20 CP 63 (mp) **(2)** | 20 CP 71 (m) **(1)** |
| **Reduction box torque** | 13x59 | 16x65 | 14x60 |
| **Speedometer ratio** | 21x18 | | |

**(1)** m = Manual geearbox.
**(2)** mp = Piloted manual gearbox.

| XSARA | GEARBOX AND TYRE SPECIFICATIONS | | | | | |
|---|---|---|---|---|---|---|
| | Petrol | | | | | |
| | 1.4i | 1.6i 16V | | 2.0i 16V | | |
| | | | AUTOMATIC | | AUTOMATIC | |
| **Engine type** | **KFW** | **NFU** | | **RFN** | | **RFS** |
| **Tyres-rolling - Circumference** | 195/55 R15 - 1,815 m | | | | | |
| **Gearbox type** | MA/5 | | AL4 | BE4/5 | AL4 | BE3/5 |
| **Gearbox ident. plate** | 20 CP 13 **(1)** | 20 CP 51 **(2)** | 20 TP 49 | 20 DL 40 | 20 TP 47 | 20 TE 47 |
| **Reduction box torque** | 16x65 | | 21x73 | 19x72 | 23x73 | 14x62 |
| **Speedometer ratio** | 21x18 | | 24x21 | 22x19 | 24x21 | 22x19 |

| | Diesel | | | | |
|---|---|---|---|---|---|
| | 1.9 D | 1.4 HDi | 2.0 Hdi | | AUTOMATIC |
| **Engine type** | **WJY** | **8HZ** | **RHY (3)** | **RHZ** | |
| **Tyres-rolling - Circumference** | 195/55 R15 – 1,815 m | | | | |
| **Gearbox type** | BE4/5 | | | | AL4 |
| **Gearbox ident. plate** | 20 DL 41 | 20 DM 54 | 20 DL 42 | 20 DM 10 | 20 TP 48 |
| **Reduction box torque** | 19x75 | | 19x70 | 17x61 | 14x62 |
| **Speedometer ratio** | 22x19 | | | | 22x19 |

**NOTE:** (RHY engine - BE4/5 gearbox) - **(1)** Estate = 20 CP 44 (16x65) (21x18) - **(2)** DAIC = 20 CP 52 (14x60) (21x18) - **(3)** XSARA DAIC RHD = 20 DM 08
**Right hand drive: 6FZ-RFN** = 20 DM 03 - **WJY** = 20 DM 05 - **8HZ** = 20 DM 53 - **RHY** = 20 DM 07 - **RHZ** = 20 DM 11

| GEARBOX AND TYRE SPECIFICATIONS | | | XSARA PICASSO |
|---|---|---|---|
| | Petrol | | |
| | 1.6i | 1.8i 16V | 2.0i 16V<br>AUTOMATIC |
| **Engine type** | **NFV** | **6FZ** | **RFN** |
| **Tyres-rolling Circumference** | 185/65 R15<br>1,895 m | | |
| **Gearbox type** | BE4/5 | | AL4 |
| **Gearbox ident. plate** | 20 DL 67 | 20 DL 69 | 20 TS 02 |
| **Reduction box torque** | 15x64 | 19x77 | 21x73 |
| **Speedometer ratio** | 22x18 | | 24x20 |
| | Diesel | | |
| | 1.6 16V HDi | | 2.0 HDi |
| **Engine type** | **9HZ** | **9HY** | **RHY** |
| **Tyres-rolling Circumference** | 185/65 R15<br>1,895 m | | |
| **Gearbox type** | BE4/5 | | |
| **Gearbox ident. plate** | 20 DM 62 | | 20 DL 65 |
| **Reduction box torque** | 19x70 | | 19x72 |
| **Speedometer ratio** | 22x18 | | 22x18 |
| **Right hand drive:** | **NFV** = 20 DL 67 | **6FZ** = 20 DL 69 | **RHY** = 20 DL 65. |

**Engines: HFX - KFV - NFU - 8HX - 8HW**

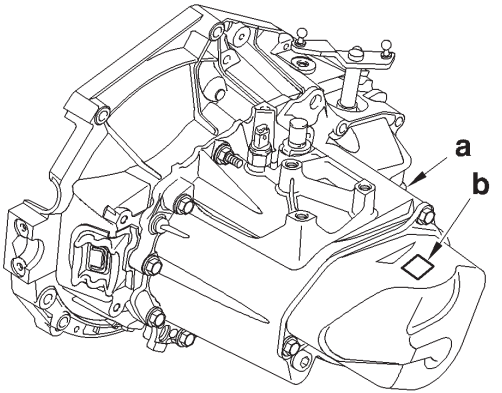


B2CP3SQC

**«a»** Identification label.

**«b»** Location for engraving of serial and gearbox nos.

**Engines: HFX - KFV - NFU - 8HX - 8HW**

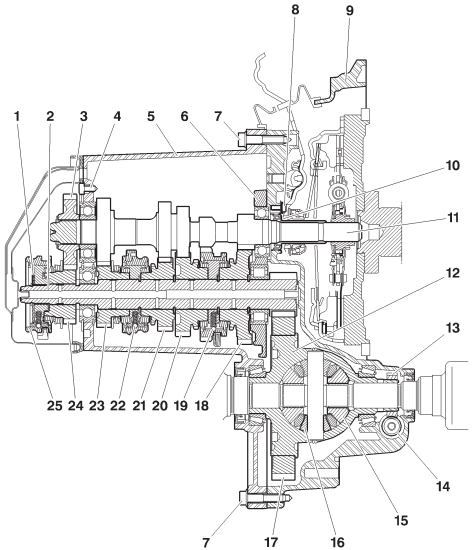


B2CP3SRP

**(1)** Retaining clip.
**(2)** Secondary shaft.
**(3)** Drive pinion *(5th gear)*.
**(4)** Bearing retaining clip screw.
**(5)** Gearbox casing.
**(6)** Intermediate plate.
**(7)** Gearbox casing fixing screw.
**(8)** Clutch bearing guide screw.
**(9)** Clutch housing.
**(10)** Bearing guide.
**(11)** Primary shaft.
**(12)** Differential housing.
**(13)** Speedometer screw.
**(14)** Counter drive.
**(15)** Planet pinions.
**(16)** Satellite pinions.
**(17)** Differential gearwheel.
**(18)** Driven pinion *(1st gear)*.
**(19)** 1st / 2nd gear synchroniser and reverse gear driven pinion.
**(20)** Driven pinion *(2nd gear)*.
**(21)** Driven pinion *(3rd gear)*.
**(22)** 3rd / 4th gear synchroniser.

**Engines: HFX - KFV - NFU - 8HX - 8HW**



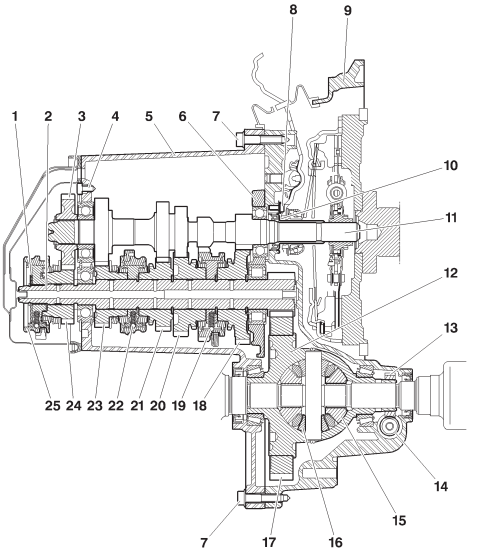


B2CP3SRP

**(23)** Driven pinion *(4th gear).*
**(24)** Driven pinion *(5th gear).*
**(25)** 5th gear synchroniser.

**Tightening torques (m.daN).**

| | | |
|---|---|---|
| **(4)** Bearing retaining clip screw | *(x4)* | **: 1,8 ± 0,2** |
| **(6)** Intermediate plate | (*11 fixing screws)* | **: 5 ± 0,5** |
| **(7)** Gearbox casing<br>16 fixing screws → RPO 9784<br>17 fixing screws RPO 9786 → | *(15 fixing screws)* | : **1,9 ± 0,2** |
| **(8)** Clutch bearing guide screw | *(3 fixing screws)* | **: 0,6 ± 0,15** |

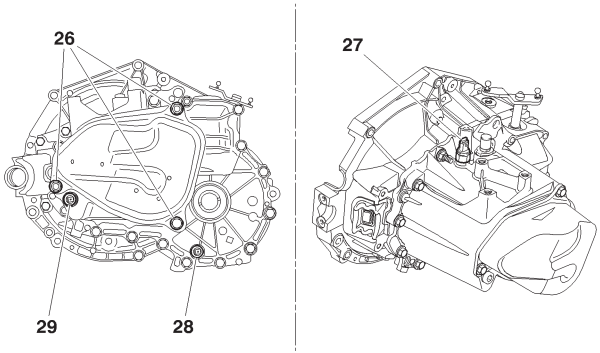


B2CP3SSD

**Engines: HFX - KFV - NFU - 8HX - 8HW**

**Tightening torques (m.daN).**

| | | |
|---|---|---|
| **(26)** 5th gear cover fixing screw | *(3 screws)* | **: 2,2 ± 0,2** |
| **(27)** Reverse gear switch | *(1 screw)* | **: 2,5 ± 0,5** |
| **(28)** Drain plug | *(1 screw)* | **: 3,3 ± 0,3** |
| **(29)** Top-up plug | *(1 screw)* | **: 3,3 ± 0,3 (*)** |

**(*) =** The oil top-up plug is discontinued from RPO 9919 ➞

**Features.**

This gearbox:
- has no adjustment.
- has a reverse gear braking device *(5th gear synchroniser)*.
- has a device for prohibiting a change from 5th gear into reverse gear.

The clutch control has a ball-joint mounted declutch fork.

**Lubrication.**

| | |
|---|---|
| Oil capacity | **: 2 ± 0,15 Litres.** |
| Checking the oil level | **: No oil level check (*)** |
| Lubrication interval | : Lubricated «**for life**». |

**NOTE:** There should be a visual check on the sealing at each engine oil change.

| XSARA | MA/5 GEARBOX |
|---|---|

**Engines: KFW - NFU**

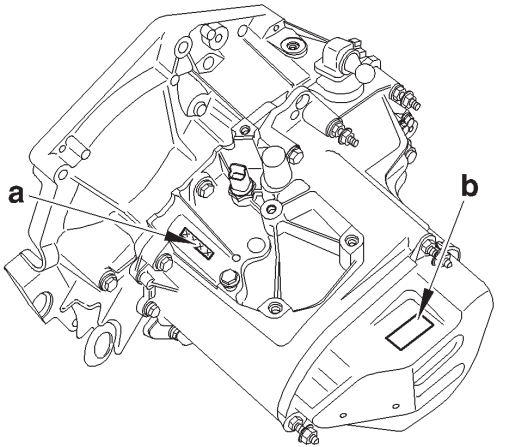


B2CP3HTC

**«a»** Identification label.

**«b»** Location for engraving of serial and gearbox nos.

**Engines: KFW - NFU**

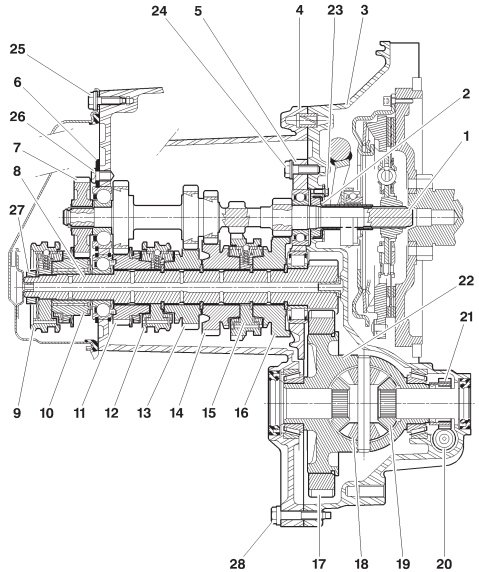


B2CP167P

**(1)** Primary shaft.
**(2)** Clutch bearing guide.
**(3)** Clutch housing.
**(4)** Gearbox casing.
**(5)** Intermediate plate.
**(6)** Bearing retaining clip.
**(7)** Drive pinion *(5th gear)*.
**(8)** Secondary shaft.
**(9)** 5th gear synchroniser.
**(10)** Driven pinion *(5th gear)*.
**(11)** Driven pinion *(4th gear)*.
**(12)** 3rd / 4th gear synchroniser.
**(13)** Driven pinion *(3rd gear)*.
**(14)** Driven pinion *(2nd gear)*.
**(15)** 1st / 2nd gear synchroniser and reverse gear driven pinion.
**(16)** Driven pinions *(1st gear)*.
**(17)** Differential gearwheel.
**(18)** Satellite pinions.
**(19)** Planet pinions.
**(20)** Counter drive.
**(21)** Speedometer screw.
**(22)** Differential housing.

**Engines: KFW - NFU**

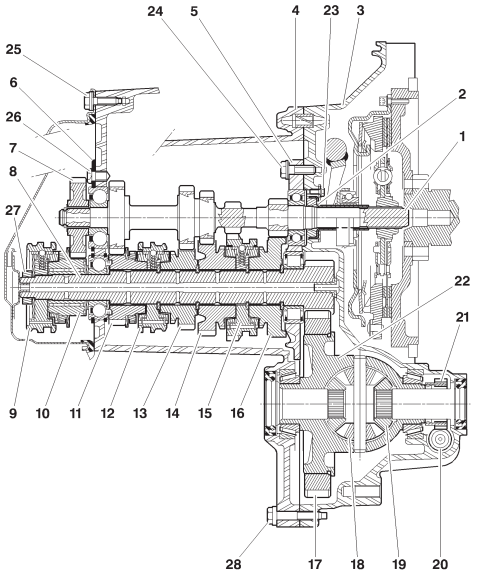


B2CP167P

**Tightening torques (m.daN).**

| | |
|---|---|
| **(23)** Clutch bearing guide *(3 fixing screws)* | **: 0,6 ± 0,15.** |
| **(24)** Intermediate plate *(11 fixing screws)* | **: 5 ± 0,5.** |
| **(25)** Rear cover *(3 fixing screws)* | **: 2,2 ± 0,2.** |
| **(26)** Bearing retaining clip *(4 fixing screws)* | **: 1,8 ± 0,2.** |
| **(27)** Secondary shaft nut *(1 nut)* | : **14 ± 1.** |
| **(28)** Gearbox casing *(15 fixing screws)* | **: 1,8 ± 0,2.** |

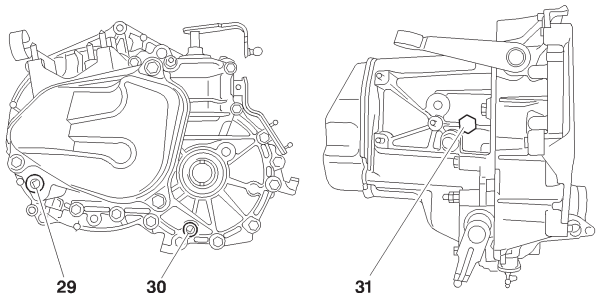


B2CP169D

**Engines: KFW - NFU**

**(29)** Top-up plug *(x1)* **: 2,5 ± 0,5.**
**(30)** Drain plug *(x1)* **: 2,5 ± 0,5.**
**(31)** Reverse gear switch *(x1)* **: 2,5 ± 0,5.**

Strengthened MA gearboxes are marked with the letter **«B»** or **«C»**:
**«B»** = Differential diameter **77 mm** + strengthened bearings.
**«C»** = Differential diameter **77 mm** + strengthened bearings + strengthened intermediate plate.
**NOTE:** All vehicles are equipped with clutch control by cable.

**Features.**

This gearbox:
- has no adjustment.
- has a reverse gear braking device *(5th gear synchroniser)*.
- has a device for prohibiting a change from 5th gear into reverse gear.

The clutch control has a ball-joint mounted declutch fork.

**Lubrication.**

| | |
|---|---|
| Oil capacity | **: 2 ± 0,15 Litres**. |
| Checking the oil level | : Every **37,500 miles**. |
| Lubrication interval | : Lubricated **«for life»**. |

| C2 | RECOMMENDATIONS - PRECAUTIONS: MA PILOTED MANUAL GEARBOX |
|---|---|

**Engines: HFX - KFV - NFU - 8HX**

**Safety requirements.**

**ESSENTIAL: Given the special features of the MA type piloted manual gearbox, observe the requirements detailed below.**

**IMPERATIVE: Always disconnect the battery negative terminal before operating on the actuators.**

**NOTE:** After disconnecting the battery, never try to remove the clutch actuator on the vehicle before having checked that it is in the closed position *(rod pushed in)*.

**IMPERATIVE:** After Sales checks done with the engine running must be performed with **«Neutral»** engaged and the handbrake on *(unless there is a clear mention otherwise in the repair procedures)*.

**IMPERATIVE:** The areas of movement of the clutch fork and of the gear engagement lever must always be kept free during the actuator operating phases.

**IMPERATIVE:** When initialising the clutch actuator and/or gearbox actuator, do not allow any person to walk or stand in front of the vehicle.

**WARNING:** When the engine is running, it is forbidden to perform repairs on the clutch and gearbox actuators on the vehicle *(whether manually or using a diagnostic tool)*.

**WARNING:** Each time the driver's door is opened and each time the igntion is switched on, the gearbox ECU prompts the initialising of the clutch and gearbox actuators *(there is movement of the clutch fork and of the gear lever)*.

**WARNING:** Whether the ignition is switched on or not, an action on the gear selector causes the clutch fork and the gear engagement lever to move on the gearbox.

**Engines: HFX - KFV - NFU - 8HX**

**Operations on electrical components.**
Do not disconnect:
- The battery when the engine is running.
- The ECU with the ignition switched on.
- The clutch and gearbox actuators with the ignition switched on.

**When carrying out electrical checks:**
- The battery must be correctly charged.
- Never use a voltage source higher than 16V.
- Never use a lamp to supply an actuator directly.

**Before disconnecting connector, check:**
- The condition of the various contacts *(for deformation, corrosion, etc)*.
- The presence and the status of the mechanical unlocking.

**Driving the vehicle.**

**IMPERATIVE:** Never move the vehicle with the ignition switched off.

Never push the vehicle to attempt to start it *(impossible with a piloted manual gearbox)*.

**Towing.**

**Conditions for towing.**

It is necessary to lift the front of the vehicle to tow it, after having positioned the gear lever in neutral. If there is a gearbox fault or malfunction, the vehicle can remain immobilised depending on the seriousness of the fault.

**If a gear is engaged, the conditions for immobilisation of the vehicle are:**
Combustion engine stopped *(the engine should not be started)*.
The clutch is open *(clutched)*.

In these conditions are met, you can lift the front of the vehicle to tow it.

**If it should not be possibe to lift the front of the vehicle, there are ways to unblock it:**

- Engage «**N**», using a diagnostic tool.
- Engage «**N**», without using a diagnostic tool.

| C2 | RECOMMENDATIONS - PRECAUTIONS: MA PILOTED MANUAL GEARBOX |
|---|---|

**Engines: HFX - KFV - NFU - 8HX**

**Engaging of «N», using a diagnostic tool.**

Preliminary operations:
- Battery voltage higher than 12.5 volts.
- Ignition switched on.
- Connect the diagnostic tool to the vehicle's diagnostic socket.

**From the diagnostic tool menus, select:**

**«DIAGNOSIS»**
MA type piloted manual gearbox.
Actuator test.
Gearbox actuator test.
Gear engagement test.
**N** *(neutral)*.

**NOTE:** The letter **«N»** should appear on the instrument panel.
If not, see the following solution:
Engaging of **«N»**, without using a diagnostic tool.

**Engaging of «N», without using a diagnostic tool.**

In this configuration, the gearbox actuator is blocked, gear engaged.

**NOTE:** This recovery solution is to be used solely in a case where the attempt to make the gearbox actuator engage b via the diagnostic tool has failed.

Engines: HFX - KFV - NFU - 8HX

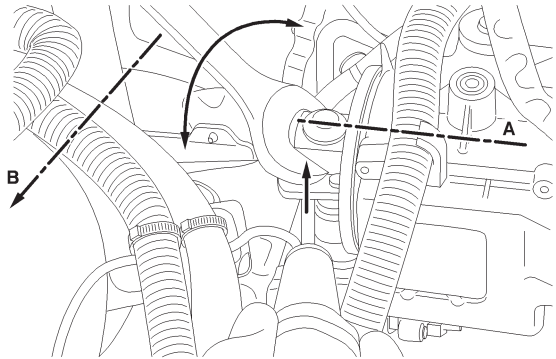


B2CP3L8D

**Engaging of «N», without using a diagnostic tool (continued).**

Preliminary operation:

- Disconnect the battery negative terminal.

- Remove the air filter.

- Use a **22 mm** spanner.

Use the spanner to lift the gear engagement lever the maximum possible until the axis **«A»** of the engagement lever is perpendicular to the axis **«B»** *(mid point of the gear engagement lever)*.

When this position is attained, position **«N»** is engaged.

| C2 | MA/5 PILOTED MANUAL GEARBOX |
|---|---|

**Engines: KFV - 8HX**

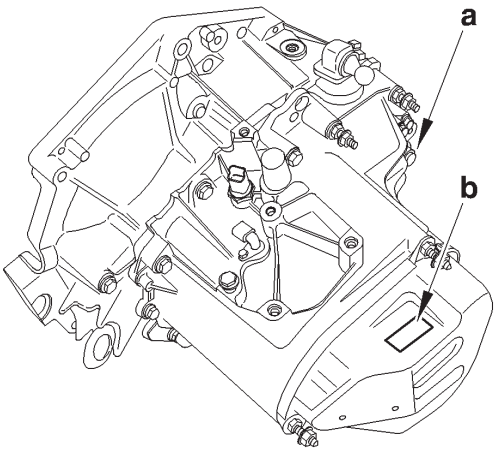


B2CP3STC

**«a»** Identification label.

**«b»** Location for engraving of serial and gearbox nos.

**Engines: KFV - 8HX**

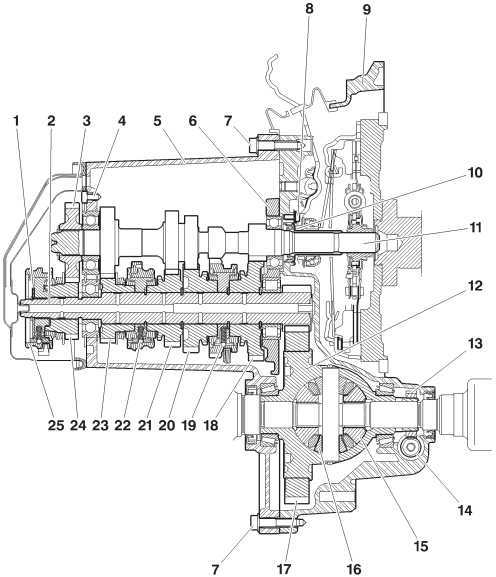


B2CP3SRP

**(1)** Circlip.
**(2)** Secondary shaft.
**(3)** Drive pinion *(5th gear)*.
**(4)** Bearing stop screw.
**(5)** Gearbox casing.
**(6)** Intermediate plate.
**(7)** Gearbox casing fixing screw.
**(8)** Clutch bearing guide screw.
**(9)** Clutch housing.
**(10)** Bearing guide.
**(11)** Primary shaft.
**(12)** Differential housing.
**(13)** Speedometer screw.
**(14)** Counter drive.
**(15)** Planet pinions.
**(16)** Satellite pinions.
**(17)** Differential gearwheel.
**(18)** Driven pinion *(1st gear)*.
**(19)** 1st / 2nd gear synchroniser and reverse gear driven pinion.
**(20)** Driven pinion *(2nd gear)*.
**(21)** Driven pinion *(3rd gear)*.
**(22)** 3rd and 4th gear synchroniser.

| C2 | MA/5 PILOTED MANUAL GEARBOX |
|---|---|

**Engines: KFV - 8HX**

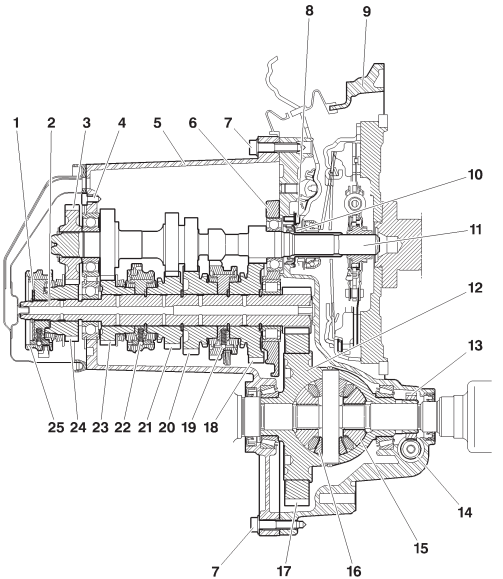


B2CP3SRP

**(23)** Driven pinion *(4th gear).*
**(24)** Driven pinion *(5th gear).*
**(25)** 5th gear synchroniser.

**Tightening torques (m.daN).**

| | | |
|---|---|---|
| **(4)** Bearing stop screw | *(x4)* | **: 1,8 ± 0,2** |
| **(6)** Intermediate plate | *(11 fixing screws)* | **: 5 ± 0,5** |
| **(7)** Gearbox casing<br>16 fixing screws → RPO 9784<br>17 fixing screws RPO 9786 → | *(15 fixing screws)* | **: 1,9 ± 0,2** |
| **(8)** Clutch bearing guide screw | *(3 fixing screws)* | **: 0,6 ± 0,15** |

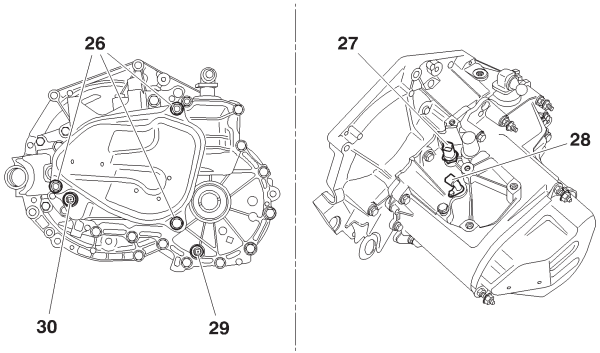


B2CP3SUD

**Engines: KFV - 8HX**

**Tightening torques (m.daN).**

| | | |
|---|---|---|
| **(26)** 5th gear cover fixing screw | *(3 screws)* | **: 2,2 ± 0,2** |
| **(27)** Gearbox input speed sensor | *(1 screw)* | **: 0,8 ± 0,2** |
| **(28)** Reverse gear switch | *(1 screw)* | **: 2,5 ± 0,5** |
| **(29)** Drain plug | *(1 screw)* | **: 3,3 ± 0,3** |
| **(30)** Level plug | *(1 screw)* | **: 3,3 ± 0,3** |

# MA/5 PILOTED MANUAL GEARBOX



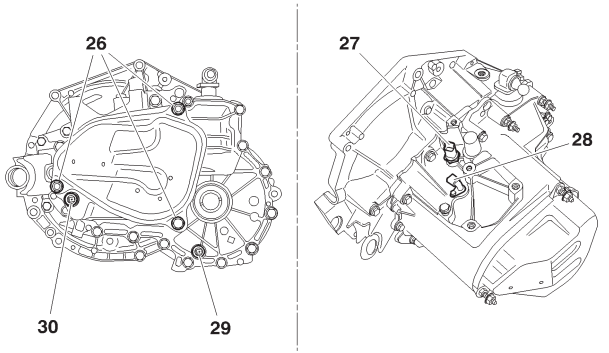


B2CP3SUD

**Engines: KFV - 8HX**

**Features.**

The piloted gearbox is a modern manual gearbox with technology that offers enhancements in every driving situation.
The piloted manual gearbox has two operating programmes:
- **«Sequential»** programme.
- **«Automatic»** programme.

The piloted manual gearbox has:
- A gearbox ECU *(supplier: **SIEMENS**).*
- A gearbox actuator with two electric motors *(supplier: **SACHS**).*

A clutch actuator with one electric motor *(supplier: **SACHS**).*
A gearbox input speed sensor.
The piloted manual gearbox has no gear control cable and no clutch cable. Changes of gear and clutching/declutching are activated by the gearbox actuator and the clutch actuator.

**Lubrication.**

| | |
|---|---|
| Oil capacity | **: 2 ± 0,15 litres**. |
| Checking of oil level | : No oil level check. **(*)** |
| Lubrication intervals | : Lubricated **«for life»**. |

**(*)** = Only a visual check of the sealing at each engine oil change interval.

**Engines: NFV - 6FZ - RFN - RFS - 8HV - 8HY - 9HZ - 9HY - WJY - RHY - RHZ**

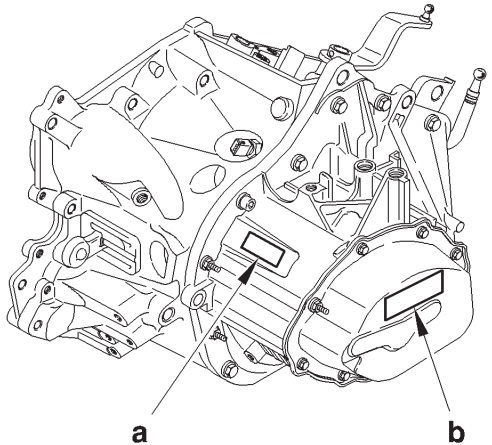


B2CP3BNC

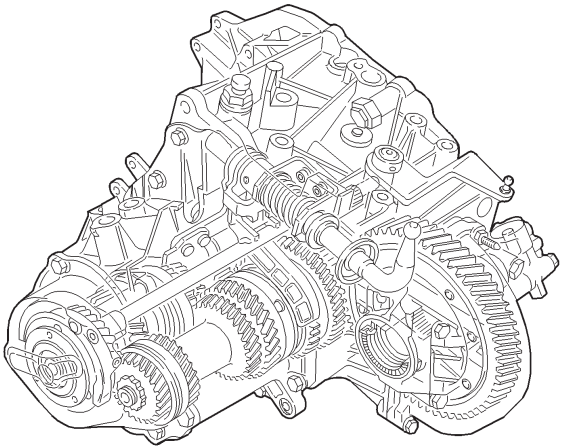

B2CP3BPD

**(a)** Marking zone *(sequence and serial no.)*.
**(b)** Location of identification label.

**Engines: NFV - 6FZ - RFN - RFS - 8HV - 8HY - 9HZ - 9HY - WJY - RHY - RHZ**



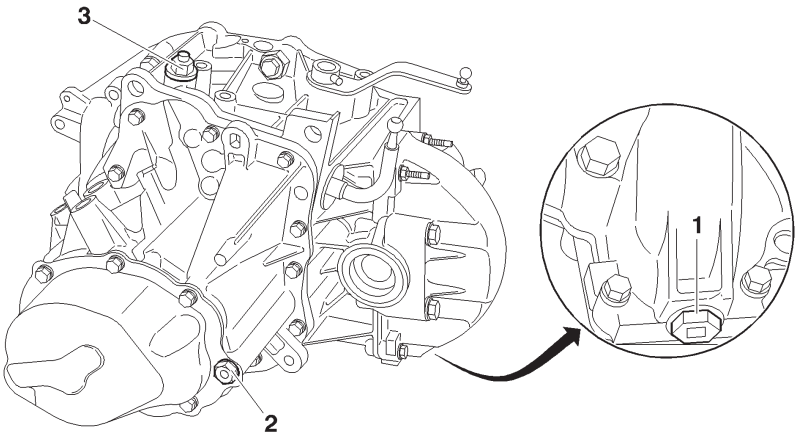


B2CP3BLD

**(1)** Drain plug.

**(2)** Filling and top-up plug.

**(3)** Air vent.

**NOTE:** The air vent aperture can be used for filling.

**Quality of oil.**
Refer to the manufacturer's instructions.

**Quantity of oil.**
Gearbox empty: **1,9 Litres**.
After draining: **2 Litres**.

**Engines: NFV - 6FZ - RFN - RFS - 8HV - 8HY - 9HZ - 9HY - WJY - RHY - RHZ**

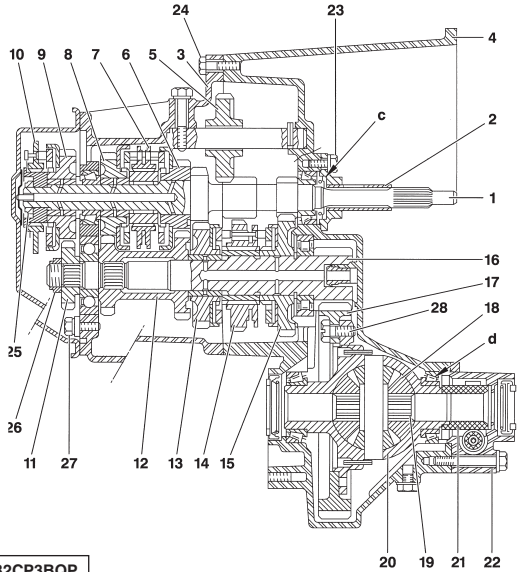


B2CP3BQP

## Description

**(1)** Primary shaft.
**(2)** Clutch bearing guide.
**(3)** Gearbox casing.
**(4)** Clutch housing.
**(5)** Reverse idle.
**(6)** Drive gear *(3rd gear)*.
**(7)** 3rd / 4th gear synchroniser.
**(8)** Drive gear *(4th gear)*.
**(9)** Drive gear *(5th gear)*.
**(10)** 5th gear synchroniser.
**(11)** Driven gear *(5th gear)*.
**(12)** Driven gear (2nd / 4th gear).
**(13)** Driven gear *(2nd gear)*.
**(14)** 1st / 2nd gear synchroniser.
**(15)** Driven gear *(1st gear)*.
**(16)** Secondary shaft.
**(17)** Differential gear.
**(18)** Satellite gears.
**(19)** Planet gears.
**(20)** Differential housing.
**(21)** Speedometer drive.
**(22)** Extension.

**«d»** Adjusting shims**: 0.7 to 2.4 mm**
*(0.10 mm and increasing by 0.10 mm).*

**«c»** Adjusting shims**: 1.4 to 1.6 mm**
*(0.10 mm and increasing by 0.10 mm).*

**Engines: 6FZ - RFN - RFS - WJY - 8HV - 8HY - 8HZ - 9HZ - 9HY - RHY - RHZ**



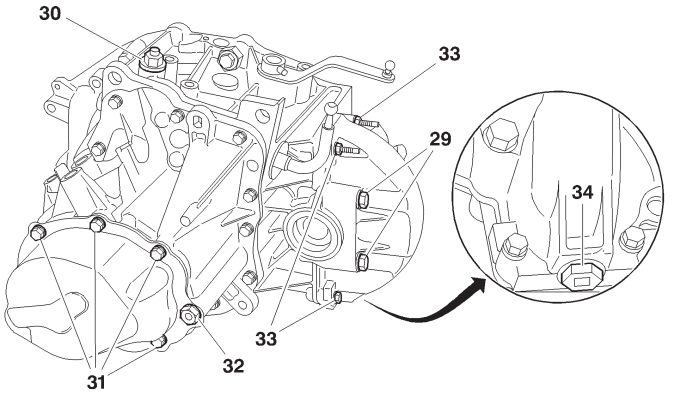


B2CP3BRD

**Tightening torques (m.daN).**

| | |
|---|---|
| **(23)** Clutch bearing guide *(3 screws)* | **: 1,25 ± 0,2** |
| **(24)** Clutch housing *(13 screws)* | **: 1,3 ± 0,2** |
| **(25)** Primary shaft nut *(1 screw)* | **: 7,25 ± 0,5** |
| **(26)** Secondary shaft nut *(1 screw)* | **: 6,5 ± 0,5** |
| **(27)** Yoke retaining screw *(2 screws)* | **: 1,5 ± 0,2** |
| **(28)** Differential gearwheel screw *(2 screws)* | **: 6,5 ± 0,5** |
| Reverse gear switch *(1 screw)* | **: 2,5 ± 0,3** |
| **(29)** Differential housing *(4 screws)* | **: 5 ± 0,5** |
| **(30)** Breather pipe | **: 1,7 ± 0,2** |
| **(31)** Rear housing cover screws *(7 screws)* | **: 1,25 ± 0,2** |
| **(32)** Top-up plug *(1 screw)* | **: 2,2 ± 0,2** |
| **(33)** Differential housing screws *(4 screws)* | **: 1,25 ± 0,2** |
| **(34)** Drain plug *(1 screw)* | **: 3,5 ± 0,3** |

**Engines: HFX - KFV - KFU - NFU - 8HX - 8HW**

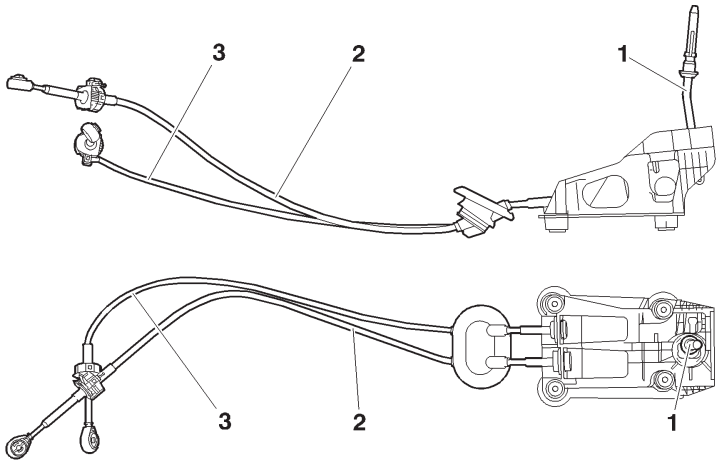


B2CP3HXD

**(1)** Gear control lever.

**(2)** Gear engagement control cable. **(*)**

**(3)** Gear selection control cable. **(*)**

**(*)** The two cables cannot be separated.

# CHECKS AND ADJUSTMENTS: MA/5 GEARBOX CONTROLS

**Engines: HFX - KFV - KFU - NFU - 8HX - 8HW**



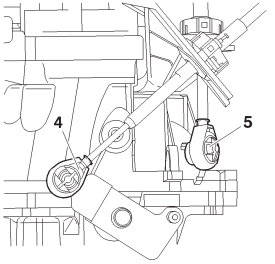


B2CP3HYC

**(4)** Gear engagement ball-joint **Ø 10 mm**.

**(5)** Gear selection ball-joint **Ø 10 mm**.

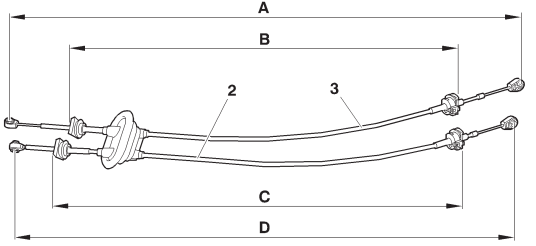


B2CP3HZD

| | C2 | | C3 | |
|---|---|---|---|---|
| | **Length D** | **Length C** | **Length D** | **Length C** |
| Gear engagement control cable **(2)** | **1040 mm** | **815 mm** | **1015 mm** | **790 mm** |
| | **Length A** | **Length B** | **Length A** | **Length B** |
| Gear selection control cable **(3)** | **1149 mm** | **800 mm** | **1093 mm** | **775 mm** |

**Engines: HFX - KFV - KFU - NFU - 8HX - 8HW**

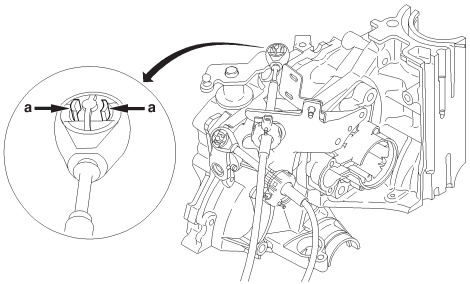


B2CP3J0D

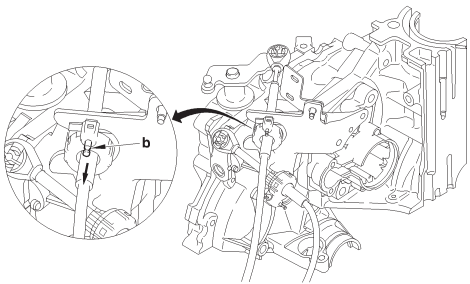


B2CP3J1D

**Adjustment.**

**WARNING: Do not use any tool to detach the ball-joints.**

The gear selection control and gear engagement control cables cannot be adjusted.

To unlock the ball-joint, press at **«a»** then pull the ball-joint upwards.

To release the sleeve stops, pull the needles **«b»**, in the direction of the arrow, then disengage the sleeve stops from their supports.

# CHECKS AND ADJUSTMENTS: MA/5 GEARBOX CONTROLS

**Engines: KFW NFU 8HZ**



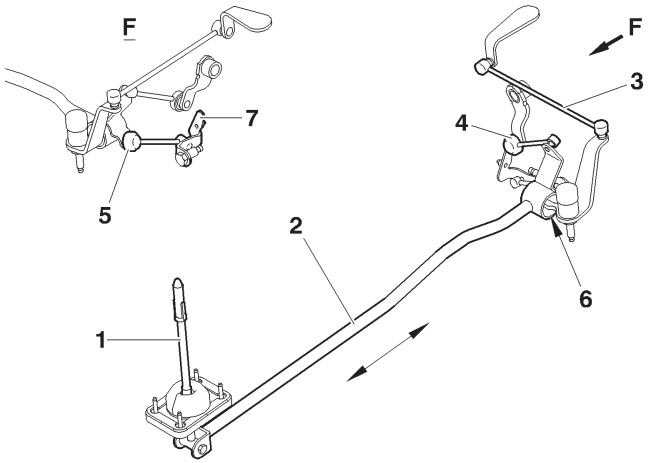


B2CP27WD

**1 -** Gear lever.
**2 -** Gear control bar.
**3 -** Engagement rod.
**4 -** Gear selection rod.
**5 -** Torque reaction rod.
**6 -** Gear engagement ball-joint.
**7 -** Fixed point on gearbox.

**Adjustment.**
The gear control assembly is not adjustable.
The rods do not have threaded ends.

**Features.**
Grease the gear engagement ball-joint.

**WARNING:** To secure the ball-joints, set the gearbox control to neutral. After fitting the gear control assembly, check that all the gears will engage without any **"tight spot"**.

**Engines: 8HV - 8HY**

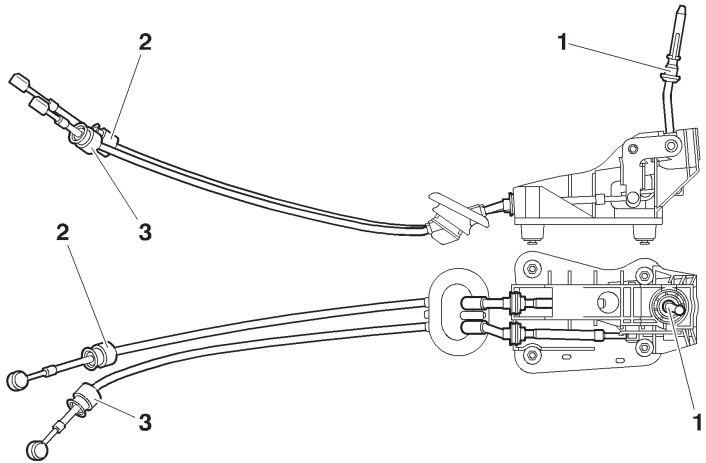


B2CP3J3D

**(1)** Gear control lever.

**(2)** Gear engagement control cable. **(*)**

**(3)** Gear selection control cable. **(*)**

**(*)** These two cables cannot be separated.

| C3 | CHECKS AND ADJUSTMENTS: BE4/5 GEARBOX CONTROLS |
|---|---|

**Engines: 8HV - 8HY**

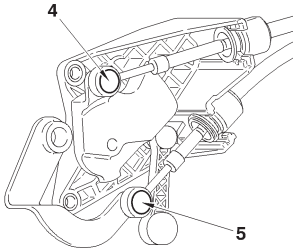


B2CP3J4C

**(4)** Gear engagement ball-joint **Ø 10 mm**.

**(5)** Gear selection ball-joint **Ø 10 mm**.

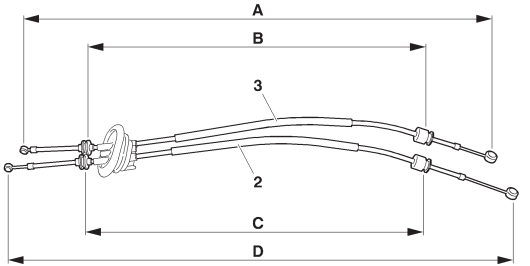


B2CP3J5D

| | Length A | Length B |
|---|---|---|
| Gear selection cable **(5)** | **907 mm** | **645 mm** |
| | **Length D** | **Length C** |
| Gear engagement cable **(4)** | **965 mm** | **610 mm** |

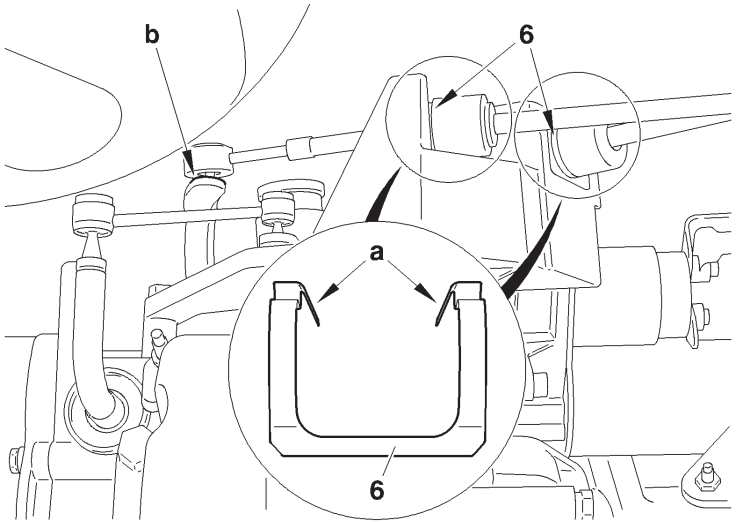


B2CP3J6D

**Adjustment.**

The gear selection control and gear engagement control cables cannot be adjusted.

To release the ball-joint, press at «**d**» then pull the ball-joint upwards.

To release sleeve stops:

- Press on the tabs of the clip **(6)** at «**a**».
- Disengage the sleeve stops from their supports.

| XSARA - XSARA PICASSO | BE4/5 GEARBOX CONTROLS |
|---|---|

**Engines: NFV - 6FZ - RFN - RFS - WJY - 8HZ - 9HZ - 9HY - RHY - RHZ**

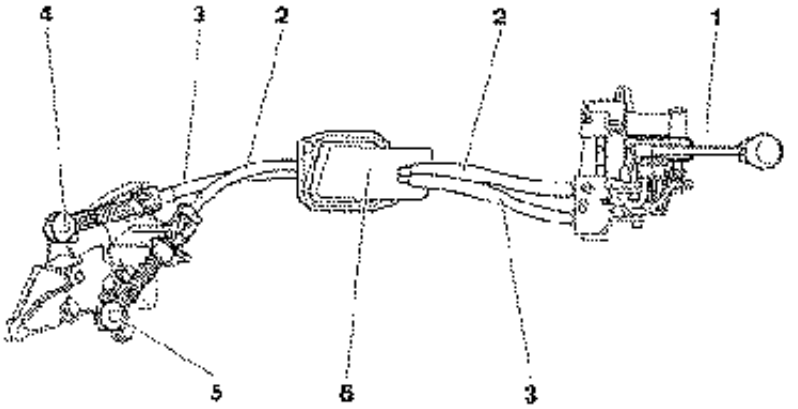


B2CP3BWD

**(1)** Gear control lever.

**(2)** Gear engagement control cable. **(*)**

**(3)** Gear selection control cable. **(*)**

**(4)** Gear selection ball-joint **Ø 10 mm**.

**(5)** Gear engagement ball-joint **Ø 10 mm**.

**(6)** Flexible insulating grommet through the bulkhead.

**(*)** = These two cables cannot be separated.

**Engines: NFV - 6FZ - RFN - RFS - WJY - 8HZ - 9HZ - 9HY - RHY - RHZ**

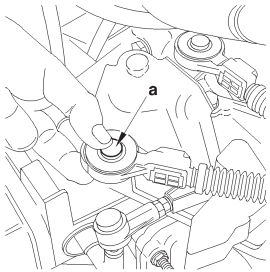


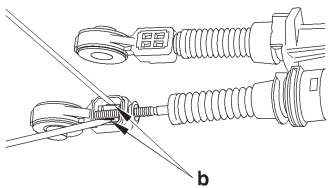


**Principles of adjusting the gear controls.**

**WARNING: Cables should be adjusted each time the gearbox, gear controls or power unit are removed.**

**Principles.**
Lock the gear lever in neutral position, using tool**: 9607-T**.
Place the gearbox in neutral.
Couple the cables on the lever.
Fit the ball-joints on the gearbox lever.
Lock the cable lengths with the ball-joint locking keys.

**WARNING: Do not use any tool to unclip the ball-joints.**

To unlock the ball-joint, press at the centre «**a**», then pull the ball-joint upwards.

**NOTE:** Changing an individual ball-joint is possible as long as the locking key is removed.
Unclip at «**b**», using two small screwdrivers.

B2CP3BXC | B2CP3BYC

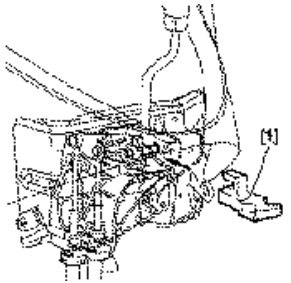


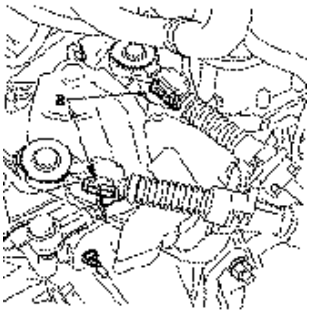


**Engines: NFV - 6FZ - RFN - RFS - WJY - 8HZ - 9HZ - 9HY - RHY - RHZ**

## Adjusting the gear controls

**Tools.**

**[1]** Tool for positioning the gear lever **: 9607-T.**

**Adjustements.**

**WARNING: Cables should be adjusted each time the gearbox, gear controls or power unit are removed.**

**Inside the vehicle:**
- Remove the trim under the gear lever.
- Lock the gear lever in neutral position, using tool **[1]**.

**Under the bonnet:**
- Remove the air filter assembly.
- Unlock the ball-joint keys at «**a**».
- Place the gear selection and control levers on neutral.
- Lock the cable lengths with the ball-joint locking keys.

**Checks.**

- Remove the tool **[1]**.
- Check that all the gears engage without «**tightness** ».
- Check that the gear lever moves identically forwards and backwards and to right and left. If it does not, repeat the adjustment.

- Refit the trim under the gear lever.
- Refit the air filter assembly.

B2CP3C6C | B2CP3C0C

**Engines: KFV - NFU - RFN - RHZ**

**Procedure to be followed prior to carrying out repairs on AL4 autoactive gearbox**

If a gearbox malfunction occurs, there are two possible configurations depending on the seriousness of the fault:
- Gearbox in back-up mode with a replacement programme of *(the fault values are taken in substitution)*.
- Gearbox in back-up mode with an emergency programme *(3rd hydraulic)*.

**WARNING: In the emergency programme, an impact is felt when changing P/R, N/R and N/D.**

**Réception client.**
Discuss with the customer, to find out all the malfunction symptoms.
**Oil quality - Oil level.**
**Oil quality.**
If the gearbox has suffered a serious fault resulting in a malfunction or the destruction of a clutch, the oil will overheat and become contaminated with impurities: the oil is said to be «**burnt**».
This is characterised by a black colour and the presence of an unpleasant smell.

**ESSENTIAL: The gearbox must be replaced.**

**Oil level** *(see corresponding operation)*.

An excessive oil level can result in the following consequences:
**- Excessive heating of the oil.**
**- Oil leaks.**
An insufficent level causes the destruction of the gearbox.
Top up the level of oil in the gearbox *(if necessary)*.
Check using a diagnostic tool.
Read the fault codes *(engine and gearbox)*.

**Absence of fault codes.**
Carry out parameter measures, actuator tests and a road test.

**Presence of fault codes.**
Carry out the necessary repairs.
Delete the fault codes.
Carry out a road test to check the repair and, if need be, modify the gearbox ECU parameters ***(this is essential after an initialisation of the ECU)***.

**Engines: KFV - NFU - RFN - RHZ**



**Precautions to be taken.**

**Towing.**

The front of the vehicle must be raised in order to be towed.
If the front of the vehicle cannot be raised:

**IMPERATIVE:**
- Put gear lever in position **«N»**.
- Do not add any oil.
- Do not exceed **30 mph** over a distance of **30 miles** of maximum.

**Driving.**

Never drive with the ignition switched off.
Never push the vehicle to try to start it
*(impossible with an automatic gearbox)*.

**NOTE:** The automatic gearbox is only lubricated when the engine is running.

**Repairs on electrical components.**

Do not disconnect:
- The battery when the engine is running.
- The ECU when the ignition is switched on.

**Before reconnecting a switch, check:**
- The condition of the various contacts *(for deformation, corrosion etc)*.
- The presence and condition of the mechanical locking.

**When performing electrical checks:**
- The battery should be correctly charged.
- Never use a voltage source higher than 16V.
- Never use a test lamp.

## Precautions to be taken.

**Repairs on mechanical components.**

Never place the gearbox on the ground without protection.

In order to avoid breaking the input shaft ring, it is **imperative** that the converter retaining bracket should be in place when handling the gearbox.

It is **imperative** to use the centring peg and the converter retaining bracket to couple the gearbox on the engine.

After coupling the gearbox on the engine, remove the centring peg.

**Modification of the oil usage counter value.**

**Exchanging the gearbox ECU:**

- Note down the gearbox counter value.
- Transfer the value read into the the new gearbox ECU.

**Exchanging the gearbox -:**

- Initialise the oil usage counter to 0.

**Draining the gearbox:**

- Initialise the oil usage counter
*(follow the diagnostic tool procedure)*.

**Engines: KFV - NFU - RFN - RHZ**

**Procedure for initialising the automatic gearbox ECU**

**Downloading.**

**Updating the gearbox ECU by downloading:**
- Follow the procedure using the diagnostic tool.

The downloading operation enables the automatic gearbox to be updated, or adapted to an evolution of the engine ECU.
Before commencing the downloading, take the value of the oil usage counter present in the automatic gearbox ECU.

**After the downloading operation, carry out the following:**
- A clearing of faults.
- A pedal initialisation.
- A re-initialisation of the auto-adaptives.
- A programming *(if necessary)*.
- A writing of the value of the oil usage counter previously read.
- A road test.

**ESSENTIAL: Every update of the automatic gearbox ECU should be accompanied by an update of the engine ECU.**

Engines: KFV - NFU - RFN - RHZ

## Procedure for initialising the automatic gearbox ECU

**Updating the value of the oil usage counter.**

**Using PROXIA.**
Access to reading and recording of the oil counter is via the menu:

- «Configuration *(integrated circuit button)* / Oil counter».

Adjustment of the oil counter value is done in incremental steps of **2750** units.

**Using LEXIA or ELIT.**
Access to reading and recording of the oil counter is via the menu:

- «Oil counter».

Adjustment of the oil counter value is done by entering directly the 5 figures of the oil counter.

**Downloading.**

**ECU downloading procedure:**
- Follow the diagnostic tool procedure.

A new ECU or downloaded update is always configured with the following options:
- SHIFT LOCK gear selection lever position.
- Without OBD outlet *(depollution L4)*.

If the ECU is to be fitted to a vehicle with depollution **L4** or not equipped with gear lever locking safety:
- Perform a configuration operation.

**Pedal initialisation.**

A pedal initialisation must be carried out in the following cases:
- Replacement of the automatic gearbox ECU.
- Replacement of the automatic gearbox.
- Downloading of the ECU configuration.
- Adjustment or replacement of the accelerator cable.
- Replacement of the butterfly potentiometer.

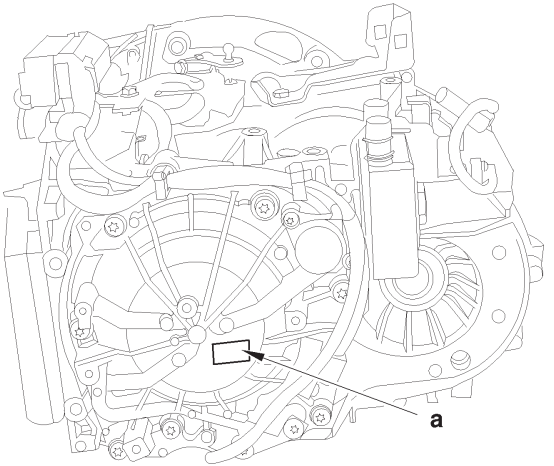


B2CP3ECD

**Engines: KFV - NFU - RFN - RHZ**

**Identification.**

**«a»** Component reference.

**WARNING:** This gearbox benefits from a special CITROEN semi-synthetic oil, which cannot be mixed with any other oil.

The gearbox is lubricated for life.

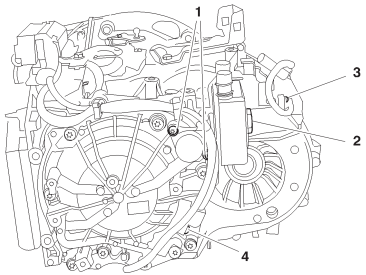


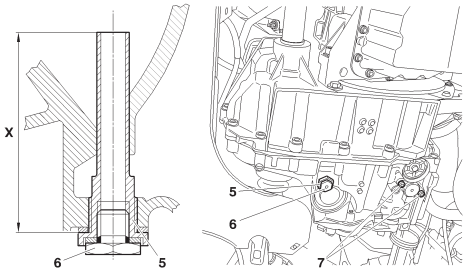


**Engines: KFV - NFU - RFN - RHZ**

**Tightening torques (m.daN).**

| | |
|---|---|
| **(1)** Oil flow modulation electrovalve fixing | **: 1 ± 0,2** |
| **(2)** Heat exchanger fixing | **: 5 ± 1** |
| **(3)** Output speed sensor fixing | **: 1 ± 0,2** |
| **(4)** Output speed sensor fixing | **: 1 ± 0,2** |
| **(5)** Oil overflow and drain fixing | **: 4 ± 0,2** |
| **(6)** Oil level plug | **: 2,4 ± 0,4** |
| **(7)** Oil pressure sensor fixing | **: 0,8 ± 0,1** |

B2CP3EDD | B2CP311D

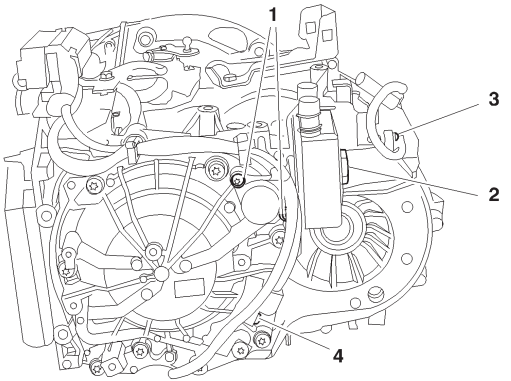


B2CP3EED

**Engines: KFV - NFU - RFN - RHZ**

**Tightening torques (m.daN).**

**(8)** Fixing of converter on diaphragm

| | |
|---|---|
| Pre-tightening | **: 1 ± 0,1** |
| Tightening | **: 3 ± 0,3** |

| | |
|---|---|
| **(9)** Plug fixing | **: 0,8 ± 0,2** |
| **(10)** Gearbox fixing on engine | **: 5,2 ± 1** |

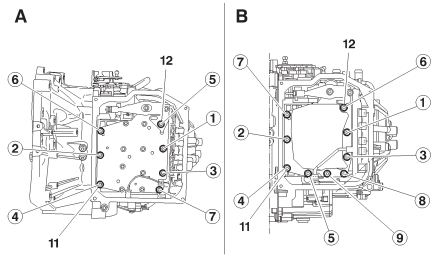


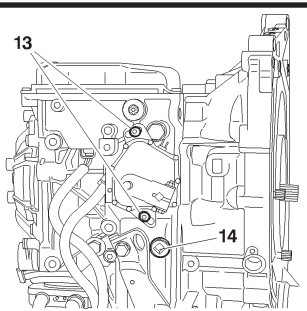


**Engines: KFV - NFU - RFN - RHZ**

**Tightening torques (m.daN).**

**A: EW7** and **EW10** engines

**Hydraulic block fixing.**

Centre the hydraulic block, using screws **(11)** and **(12)** .

| | | |
|---|---|---|
| Pre-tighten | *(no strict order)* | **: 0,9** |
| Slacken | | **: All 7 screws** |
| Tighten | *(respect the order indicated)* | **: 0,75** |

**NOTE:** The screw **(11)** is shouldered.

**B: DW10** engine.

**Hydraulic block fixing.**

Centre the hydraulic block, using screws **(11)** and **(12)**.

| | | |
|---|---|---|
| Pre-tighten | *(no strict order)* | **: 0,9** |
| Slacken | | **: All 7 screws** |
| Tighten | *(respect the order indicated)* | **: 0,75** |

**NOTE:** The screw **(11)** is shouldered.

| | |
|---|---|
| **(13)** Fixing of selector lever position switch | **: 1,5 ± 0,2** |
| **(14)** Oil filler plug | **: 2,4 ± 0,4** |

B2CP3EFD | B2CP3EGC

C3

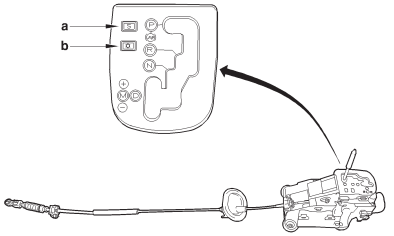


XSARA PICASSO

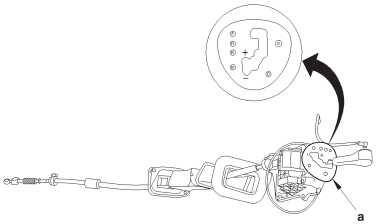


Engines: KFV - RFN

**In passenger compartment.**
The gear selector is guided by the shape of the stepped gate and by a retaining spring which pulls it to the left hand side.

The gear selector control has **5 positions**:

- Position **«P»**: Park *(locking and immobilisation of the vehicle)*.
- Position **«R»**: Reverse gear.
- Position **«N»**: Neutral.
- Position **«D»**: Drive *(use of the 4 gears in their autoadaptive automatic function)*.
- Position **«M»**: Manual *(this position lets the driver select his own gears in sequential mode by pulling the gear selector to **«M-»** or pushing it to **«M+»**)*.

**NOTE:** Only the positions **«P»** or **«N»** authorise the starting of the engine.

In position **«M»**, selection is by an electronic sensor located close to the gear lever.
The variation of flux necessary to the movement of the sensor cells is obtained by a magnet located on the lever itself. This enables the change of status.

B2CP3H7D | B2CP3MUD

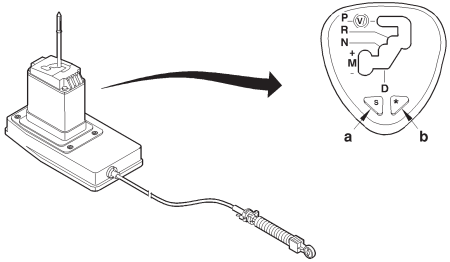


B2CP3DKD

**Engine: KFV**

**In passenger compartment (continued).**

The information is transmitted to the gearbox ECU.

**NOTE:** The vehicle is equipped with the **«shift lock»**: you have to switch on the ignition and press the brake pedal to unlock the selector lever from position **«P»**.

Two switches placed on the gear control gate permit the driver to choose one of the following **three driving programmes**:

- **Normal programme**: Operates as the default programme *(eco law, autoadaptive mode)*.
- **Sport programme (a)**: Permits a more dynamic, sporty performance.
- **Snow programme (b)**: Facilitates starting and adhesion on slippery surfaces.

To return to the normal programme, press a second time on the sport switch or snow switch.

C3

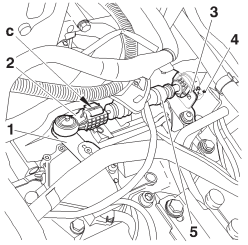


XSARA PICASSO

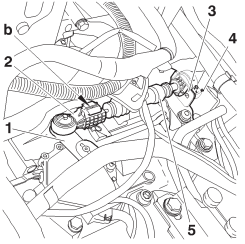


Engines: KFV - RFN

**Gearbox end.**

The automatic gearbox is controlled by a cable.

«**c**» or «**d**» Push-button.

**(1)** Control lever with ball-joint.

**(2)** Automatic adjustment *(pull out the button to adjust the control, push it in to lock the adjustment of the control)*.

**(3)** Sleeve stop.

**(4)** Selection control locking clip **(5)** on the sleeve stop **(3)**.

B2CP3H8C | B2CP3N7C

| XSARA | Engines: NFU - RFN - RHZ |
|---|---|
| 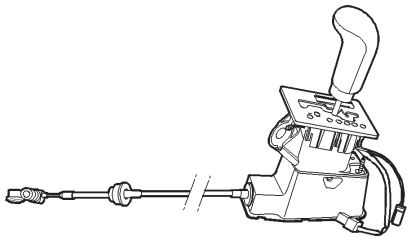 B2CP3ADC | **In passenger compartment.**<br>The selector control has **6 positions**:<br>- The gear selector is guided by the shape of the stepped gate and by a retaining spring which pulls it to the left hand side.<br>- Push the lever to the right to exit from position **«P»**.<br>**NOTE:** The vehicle is equipped with the **«shift lock»**: you have to switch on the ignition and press the brake pedal to unlock the selector lever from position **«P»**.<br>**P:** Park (system locked).<br>**R:** Reverse gear.<br>**N:** Neutral.<br>**D:** Automatic *(1st to 4th gear)*.<br>**3:** Automatic *(1st to 3rd gear)*.<br>**2:** Automatic *(1st to 2nd gear)*.<br>A switch located to the left of the gear control allows the driver to choose from these programmes:<br>**Normal:** Conventional use of the automatic gearbox.<br>**Sport:** This programme favours performance.<br>**Snow:** In position **«D»**, starting is in **2nd gear for diesel** and in **3rd gear for petrol**.<br>**NOTE:** Only the positions **«P»** or **«N»** authorise the starting of the engine. |

XSARA

Engines: NFU - RFN - RHZ

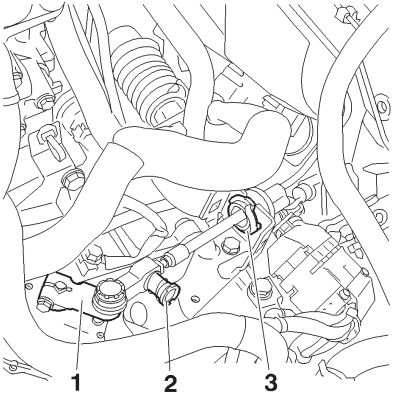


**Gearbox end.**

**(1)** Control lever.

**(2)** Automatic adjustment.

**(3)** Sleeve stop.

The automatic gearbox is controlled by a cable.

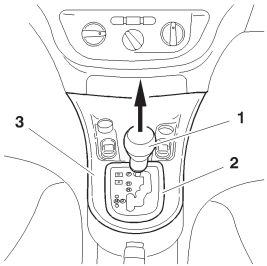


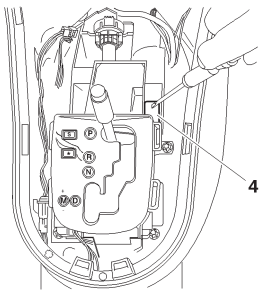


**Engine: KFV**

**NOTE:** The **«shift lock»** is a system that locks the gear selection lever in position **«P»**.

**Unlocking the «SHIFT LOCK»** *(normal operation)*.
- Switch on the ignition.
- Press the brake pedal and keep it pressed.
- Move the gear selection lever out of position **«P»**.

**Unlocking the «SHIFT LOCK»** *(with an operating fault)*.
**NOTE:** It is impossible to unlock the **«shift lock»** with the **«Normal operation»** method.
The fault may originate from one of the following components:
- **«Shift lock»**.
- Gear lever position switch.
- Automatic gearbox ECU.
- Electrical harnesses.
- Battery voltage.

Remove:
- The gear lever knob **(1)** *(pull upwards)*.
- The cover **(2)** *(Unclip)*.
- The top of the central console **(3)**.
- Unlock the **«shift lock» (4)** with the aid of a screwdriver.
- Move the gear selection lever out of position **«P»**.

C5FP0ETC | B2CP3GZC

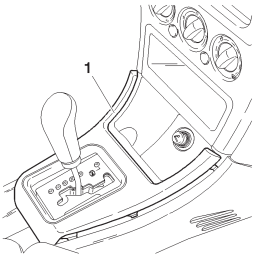


C5FP06YC

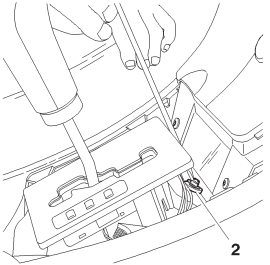


C5FP06ZC

**Engines: NFU - RFN - RHZ**

## SHIFT LOCK.

**NOTE:** The «**shift lock**» is a system that locks the gear selection lever in position «**P**».

U**nlocking the «SHIFT LOCK»** *(normal operation)*.
- Switch on the ignition.
- Press the brake pedal and keep it pressed.
- Move the gear selection lever out of position «**P**».

**Unlocking the «SHIFT LOCK»** *(with an operating fault)*.
**NOTE:** It is impossible to unlock the «**shift lock**» with the «**Normal operation**» method.
The fault may originate from one of the following components:
- «**Shift lock**».
- Gear lever position switch.
- Automatic gearbox ECU.
- Electrical harnesses.
- Battery voltage.

Remove:
- The cover **(1)**.
- Unlock the «**shift lock**» **(2)** with the aid of a screwdriver.
- Move the gear selection lever out of position «**P**».

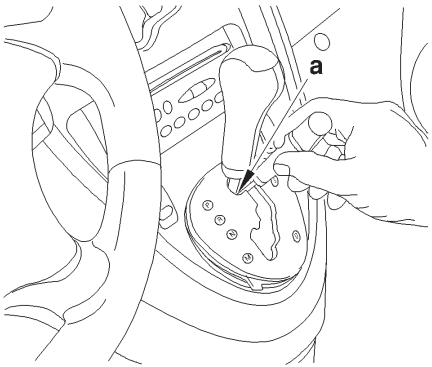


B2CP3N8C

Engine: RFN

## SHIFT LOCK.

**NOTE:** The **«shift lock»** is a system that locks the gear selection lever in position **«P»**.

**Unlocking the «SHIFT LOCK»** *(normal operation)*.
- Switch on the ignition.
- Press the brake pedal and keep it pressed.
- Move the gear selection lever out of position **«P»**.

**Unlocking the «SHIFT LOCK»** *(with an operating fault)*.

**NOTE:** It is impossible to unlock the **«shift lock»** with the **«Normal operation»** method.

The fault may originate from one of the following components:

- **«Shift lock»**.
- Gear lever position switch.
- Automatic gearbox ECU.
- Electrical harnesses.
- Battery voltage.

Remove:
- Unlock the **«shift lock»** by pressing at **«a»** with a screwdriver placed in the gear selection control gate.
- Move the gear selection lever out of position **«P»**.

Engine: KFV



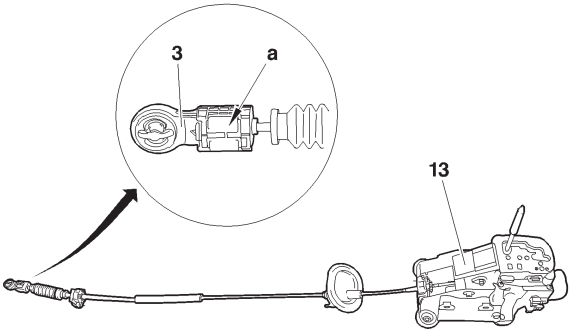


B2CP3GYD

C3

**Refitting the gearbox control.**

**New gear selection control**

Couple the ball-joint **(3)**.
Push in the component **(a)** without bending the cable.
Check all the gear selection control positions.

**Re-used gear selection control.**

Release the component **(a)**.
Couple the ball-joint **(3)**.
Push in the component **(a)** without bending the cable.
Check all the gear selection control positions.

Engines: NFU - RFN - RHZ

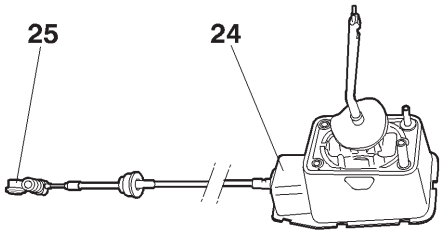


B2CP3AXC

**Refitting the gearbox control.**

Proceed in the opposite order to removal.

**IMPERATIVE: To adjust the gear selection control, place the gear selection lever in the park position. Press on the component (25) without bending the cable, then release.**

**IMPERATIVE: Check that all the gears can engage.**

Engine: RFN



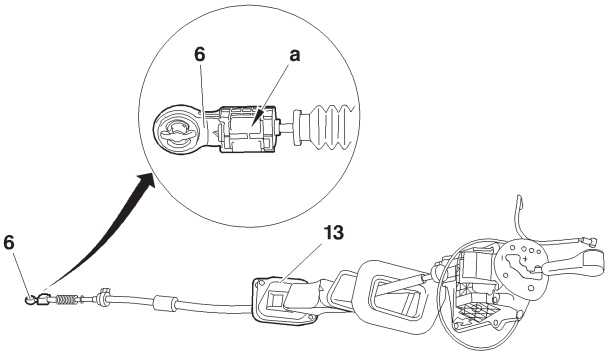


B2CP3GYD

**Refitting.**

Proceed in the opposite order to removal.

Lubricate the support **(13)**.

**New gear selection control.**

Couple the ball-joint **(6)**.

**WARNING:** Do not deform the selection lever on the automatic gearbox.

Push in the component **(a)** without bending the cable.
Check all the gear selection control positions.

**Re-used gear selection control.**

Release the component **(a)**.
Couple the ball-joint **(6)**.
Push in the component (a) without bending the cable.
Check all the gear selection control positions.

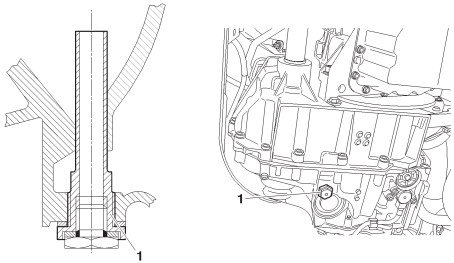


B2CP3AYD

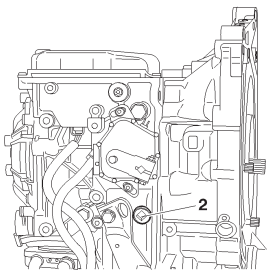


B2CP31GC

**Engines: KFV - NFU - RFN - RHZ**

**Tools.**

**[1]** Filling cylinder **: (-).0341**

**Draining.**

**IMPERATIVE:** The gearbox should be drained when the oil is warm *(at least 60°C)*, to eliminate the impurities in suspension in the oil.

**NOTE:** Draining is partial, the converter cannot be completely emptied.

Remove the drain plug **(1)**.

**NOTE:** Approx. 3 litres of oil should flow out.

**Filling.**

Refit the drain plug **(1)** *(equipped with a new seal)*, tighten to **2,4 ± 0,2 m.daN**.
Remove the oil filler cap **(2)**.
Use tool **[1]**.

Oil capacity for dry gearbox:

- **EW** engine: **5,85 litres**.
- **DW** engine: **5,40 litres**.

Oil remaining after draining: **3 litres** *(approx.)*.
Quantity of oil to be put in : **3 litres** *(approx.)*.
Refit the oil filler cap **(2)** *(equipped with a new seal)*, tighten to **2,4± 0,2 m.daN**.
Initialise the oil wear counter *(follow the diagnostic tool procedure)*.

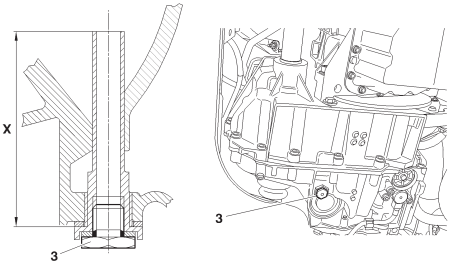


B2CP3AZD

**Engines: KFV - NFU - RFN - RHZ**

**Checking the oil level.**

Prior conditions:

- Vehicle in horizontal position.
- Check gearbox is not in back-up mode.
- Remove the oil filler cap **(2)**.
- Add **0.5 litres extra oil** into the gearbox.
- Foot on the brake, change through all the gears.
- Selection lever in position **"P"**.
- Engine running, at idle.
- Oil temperature: **60°C (+8°C; -2°C)**.
- Remove the oil level plug **(3)**.

| | | |
|---|---|---|
| **C3** | **TU3** engines | **Dimension «X» = 81 mm** |
| **XSARA** | **TU5** and **EW10** engines | **Dimension «X» = 81 mm** |
| **XSARA** | **DW10** engines | **Dimension «X» = 77 mm** |
| **XSARA PICASSO** | **EW10** engines | **Dimension «X» = 81 mm** |

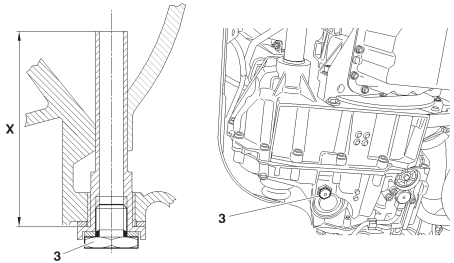


B2CP3AZD

**Engines: KFV - NFU - RFN - RHZ**

**Thread of oil then "drip-drip".**

Refit the plug **(3)**, Tighten to **2,4± 0,2 m.daN**.

**"Drip-drip" or nothing.**

Refit the oil level plug **(3)**.
Stop the engine.
Add **0.5 litres** extra oil into the gearbox.
Repeat the oil level procedure.

**NOTE:** The level is correct at the moment the thread of oil becomes **"drip-drip"**.

Refit the oil level plug **(3)** *(equipped with a new seal)*, tighten to **2,4± 0,2 m.daN**.

**Checking the oil level (continued).**

Refit the oil filler plug **(3)** *(equipped with a new seal)*, tighten to **2,4± 0,2 m.daN**.

An excessive level of oil can lead to the following consequences:
- Oil heating up abnormally,
- Oil leaks.

A level that is too low will result in the destruction of the gearbox.

| C2 - C3 - C3 PLURIEL - XSARA - XSARA PICASSO | | | DRIVESHAFTS - GEARBOX | | | | |
|---|---|---|---|---|---|---|---|
| | | | Tightening torques (m.daN) | | Gearbox oil seal mandrels | | |
| Vehicles | Gearbox | Engines | Driveshaft bearing | Driveshaft nut | RH side | LH side | Tool kit |
| C2 C3 C3 Pluriel | MA/5 | HFX - KFV - KFU<br>8HX - 8HW | NO | 24,5 ± 0,5 | 7114-T.W | 7114-T.X | 7116-T |
| | | NFU | 2 ± 0,2 | | | | |
| XSARA | | KFW - NFU | 1,8 ± 0,1 | 32 ± 1,5 | | | |
| XSARA<br>XSARA PICASSO | BE4/5 | NFV - RFS - RFN - 6FZ - WJY<br>8HZ - 9HZ - 9HY - RHY- RHZ | | | | | |
| C3 | | 8HV - 8HY | 2 ± 0,2 | | | | |
| C3<br>XSARA PICASSO | AL 4 | NFU - RFN - RHZ | 1,8 ± 0,1 | 32,5 ± 2,5 | Seal extractor<br>RH / LH<br>(-) 0338 C | | (-) 0338 |
| | | | | | (-) 0338 J1<br>+ (-) 0338 J3 | (-) 0338 H1<br>+ (-) 0338 H2 | |
| XSARA | | KFV | 1 ± 0,1 | | (-) 0338 J1<br>+ (-) 0338 J2 | (-) 0338 H1<br>+ (-) 0338 H2 | |
| Tightening torque (m.daN) for wheel bolts: XSARA = 8,5 ± 0,8 | | | XSARA PICASSO = 10 ± 1 | | | C2 C3 C3 PLURIEL = 9 ± 1 | |

# AXLE GEOMETRY

C2

**Conditions for checking and adjusting**

Tyres inflated to correct pressures. Vehicle at reference height.
Steering rack locked at mid point *(see corresponding operation)*.

**Vehicle heights at reference height**

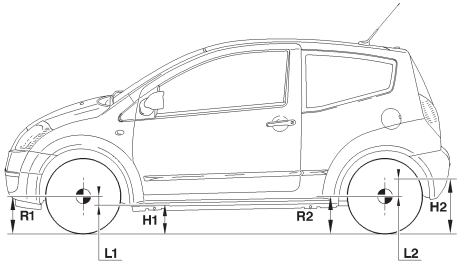


E1APOBZD

| Front height | Rear height |
|---|---|
| **L1** | **L2** |
| **H1 = R1 – L1** | **H2 = R2 + L2** |
| **H1** = Measurement between the measuring zone underneath the front subframe and the ground.<br>**R1** = Front wheel radius under load.<br>**L1** = Distance between the wheel axis and the measuring zone underneath the front subframe. | **H2** = Measurement between the measuring zone underneath the rear sill and the ground.<br>**R2** = Rear wheel radius under load.<br>**L2** = Distance between the wheel axis and the measuring zone underneath the rear sill. |

| C2 | AXLE GEOMETRY |
|---|---|

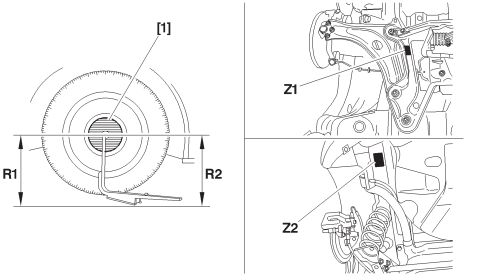


B3CP07SD

| Measuring front height | | | Measuring rear height | | |
|---|---|---|---|---|---|
| **[1]** Gauge for measuring the wheel radius, 4 bolts, tool **8006-T** | | | | | |
| **Z1** = Measuring zone underneath the front subframe. | | | **Z2** = Measuring zone underneath the rear sill. | | |
| Measure the radius of the front wheel **R1** - Calculate dimension **H1 = R1 – L1** | | | Measure the radius of the rear wheel **R2** - Calculate dimension **H2 = R2 + L2** | | |
| Value at reference height **(+ 6 - 8 mm)** | **Except CRD (*)** | | Value at reference height **(+ 10 - 6 mm)** | **Except CRD (*)** | |
| | **HFX - KFV - 8HX** | **NFU** | | **HFX - KFV - 8HX** | **NFU** |
| | **L1 = 142,5 mm** | **L1 = 152,5 mm** | | **L2 = 52 mm** | **L2 = 42 mm** |

Compress the suspension to obtain the calculated values.
The height difference between the two axle dimensions should be less than **10 mm**.
**(*) = CRD**: Difficult road conditions.

# AXLE GEOMETRY

C2

| Front axle | Rear axle |
|---|---|
| Dissymmetry of lower castor at **0° 30'**.<br>DISSYMMETRY OF LOWER CAMBER **0° 18'**.<br>Distribute symmetrically, LH / RH wheel, the total tracking value. | Dissymmetry of lower camb8er 0° 18. |

**All types (except CRD)**

| Vehicle | | HFX - KFV - 8HX Tracking | Castor (± 0°18') | Camber (± 0°30') | Pivot angle ± 0°30' | HFX - KFV - 8HX Tracking | Camber |
|---|---|---|---|---|---|---|---|
| | | ADJUSTABLE | Non adjustable | | | Non adjustable | |
| All Types | mm | 2 ± 1 | | | | 5,5 ± 1 | |
| | 0° | 0°18' ± 0°09' | 3°58' | - 0°31' | 11°26' | 0°53' ± 0°09' | - 1°30' |

| Vehicle | | NFU Tracking | Castor ± 0°18' | Camber ± 0°30' | Pivot angle ± 0°30' | NFU Tracking | Camber |
|---|---|---|---|---|---|---|---|
| | | ADJUSTABLE | Non adjustable | | | Non adjustable | |
| All Types | mm | 2 ± 1 | | | | 5,8 ± 1 | |
| | 0° | 0°18'± 0°09' | 4° | - 0°32' | 11°35' | 0°49' ± 0°09' | -1°31' |

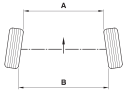


B3CP02UC

| | WARNING | |
|---|---|---|
| **A < B =** Positive figure: | + = | TOE-IN |
| **A > B =** Negative figure: | - = | TOE-OUT |

# FRONT AXLE

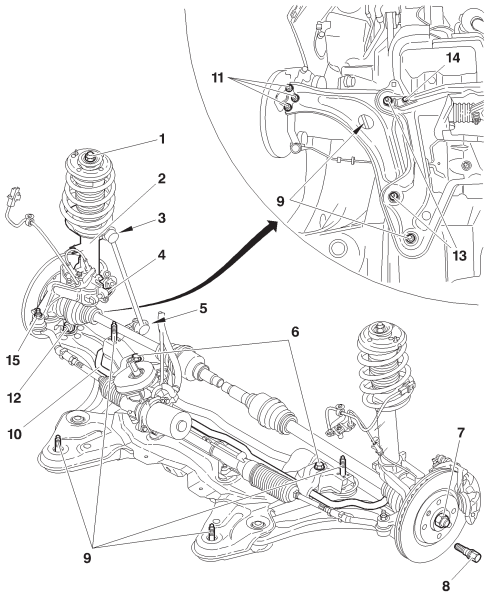


B3CP07RP

**Tightening torques (m.daN).**

| | |
|---|---|
| **(1)** Nut fixing suspension leg on body | **: 6,5 ± 0,6** |
| **(2)** Damper | **:** |
| **(3)** Anti-roll bar link rod upper ball-joint | **: 3,2 ± 0,3** |
| **(4)** Suspension leg pivot | **: 5,4 ± 0,5** |
| **(5)** Anti-roll bar link rod lower ball-joint | **: 3,2 ± 0,3** |
| **(6)** Anti-roll bar bearing fixing on subframe | **: 8 ± 0,8** |
| **(7)** Hub nut | **: 24,5 ± 0,5** |
| **(8)** Wheel bolt | **: 9 ± 1** |
| **(9)** Subframe to bodyshell fixing screw | **: 10 ± 1** |
| **(10)** Anti-roll bar | **:** |
| **(11)** Pivot lower ball-joint fixing on lower arm | **: 5,5 ± 0,5** |
| **(12)** Pivot lower ball-joint fixing | **: 4 ± 0,4** |
| **(13)** Lower arm front and rear mounting fixing | **: 14 ± 0,4** |
| **(14)** Stabiliser bar screw | **: 6,6 ± 0,7** |
| **(15)** Steering ball-joint fixing | **: 3,5 ± 0,3** |

| **Private vehicles** | **Anti-roll bar** | |
|---|---|---|
| **Europe** | **Diameter (mm)** | **Colour** |
| **HFX - KFV** | **18** | **Violet** |
| **NFU** | **20** | **Green** |
| **8HX** | **19** | **Blue** |
| **Entreprise vehicles** | **Diameter (mm)** | **Colour** |
| **HFX - 8HX** | **18** | **Violet** |
| **CRD vehicles** | **Diameter (mm)** | **Colour** |
| **KFV - 8HX** | **18** | **Violet** |
| **NFU** | **20** | **Green** |

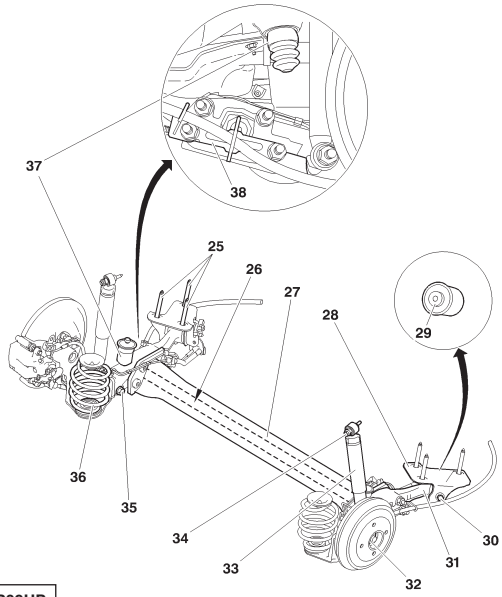


B3DP09UP

**Tightening torques (m.daN).**

| | |
|---|---|
| **(25)** Rear axle fixing screw | **: 10 ± 1** |
| **(26)** Anti-roll bar | **:** |
| **(27)** Rear axle crossmember | **:** |
| **(28)** Rear suspension arm silentblock yoke | **:** |
| **(29)** Rear suspension arm silentblock | **:** |
| **(30)** Yoke / suspension arm fixing screw | **: 7 ± 0,5** |
| **(31)** Rear suspension arm | **:** |
| **(32)** Stub axle bearing nut | **: 20 ± 2** |
| **(33)** Damper | **:** |
| **(34)** Damper upper fixing | **: 4,5 ± 0,4** |
| **(35)** Damper lower fixing | **: 9,3 ± 0,9** |
| **(36)** Suspension springs | **:** |
| **(37)** Travel stop | **:** |
| **(38)** Secondary brake cable guide support | **:** |

| **Private vehicles Europe** | **Anti-roll bar** |
|---|---|
| | **Diameter (mm)** |
| **HFX - KFV** | **20,5 *(tubular)*** |
| **8HX** | **23,5 *(tubular)*** |
| **NFU** | **25 *(solid)*** |
| **Vehicle entreprise** | **Diameter (mm)** |
| **8HX** | **20,5 *(tubular)*** |
| **CRD vehicles** | **Diameter (mm)** |
| **8HX** | **20,5 *(tubular)*** |
| **NFU** | **25,5 *(tubular)*** |

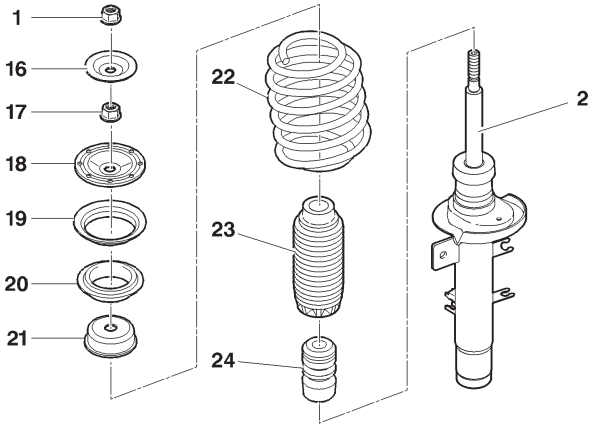


B3BP180D

## FRONT AXLE

| | |
|---|---|
| **(1)** Nut fixing suspension leg on body | **: 6,5 ± 0,6** |
| **(2)** Damper | |
| **(16)** Cup | |
| **(17)** Damper nut | **: 6,5 ± 0,6** |
| **(18)** Damper cup | |
| **(19)** Ball bearing | |
| **(20)** Spring thrust cup | |
| **(21)** Travel stop cup | |
| **(22)** Suspension spring | |
| **(23)** Damper rod rpotector | |
| **(24)** Travel stop | |

**Engines: HFX - KFV - NFU - 8HX**

**Steering column**

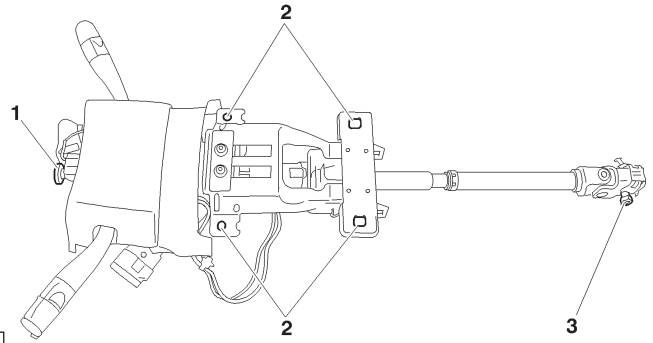


B3EP13GD

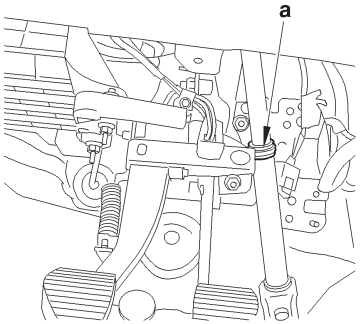


B3EP13HC

**Tightening torques (m.daN.).**

| | |
|---|---|
| **(1)** Steering wheel fixing | **: 2 ± 0,3** |
| **(2)** Steering column fixing on support | **: 2,2 ± 0,5** |
| **(3)** Steering cardan fixing | **: 2,2 ± 0,2** |

**Identification.**

Identified by the colour of the ring at «**a**».

| | |
|---|---|
| Left hand drive | **: BLUE ring**. |
| Right hand drive | **: WHITE ring**. |

| C2 | FEATURES OF ELECTRIC POWER STEERING |
|---|---|

**Engines: HFX - KFV - NFU - 8HX**

**Steering mechanism**

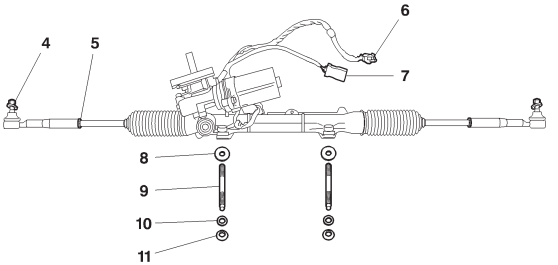


B3EP13JD

**Tightening torques (m.daN.).**

| | |
|---|---|
| **(4)** Ball-joint fixing on pivot | **: 3,5 ± 0,3** |
| **(5)** Steering rod lock-nut | **: 5 ± 0,5** |
| **(8)** Threaded washer | |
| **(9)** Stud | **: 0,8 ± 0,1** |
| **(10)** Flat washers | |
| **(11)** Fixing of mechanism on subframe | **: 8 ± 0,8** |

| | HFX - KFV - 8HX | NFU |
|---|---|---|
| **Electric motor** | **60 A** | **65 A** |
| **Steering rack travel** | **2x72** | **2x64** |
| **Steering ratio** | **45,6/1** | |
| **Number of rotations of steering wheel** | **3,2** | **2,8** |
| **Inner angle of lock** | **38°** | **32°30’** |
| **Outer angle of lock** | **32°24’** | **28°42’** |

**Connectors.**

**(6)** Supply of electric assistance motor

**(7)** Torque sensor signals

# FEATURES OF ELECTRIC POWER STEERING

C2

**Engines: HFX - KFV - NFU - 8HX**

## Steering assistance

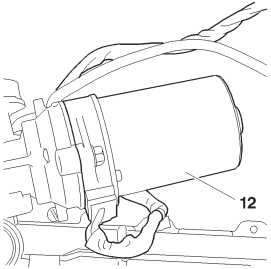


B3EP13KC

Supplier: **KOYO**.

The steering assistance is rpovided by the assistance motor **(12)**, controlled by the ECU.

Power delivered to the assistance motor **(12)** depends on:

- Speed of the vehicle.
- Torque applied on the steering wheel.

## Electric power steering ECU

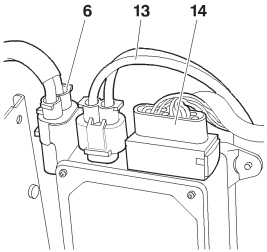


B3EP13LC

Only one ECU version, whatever the engine-type.

The electric power steering ECU is linked to the following connectors:

- **(6)** Assistance motor supply.
- **(13)** Electric power steering ECU supply.
- **(14)** Control signals.

After changing the electric power steering ECU, it is necessary to perform a configuration.

# SPECIAL FEATURES: STEERING

## Engines: HFX - KFV - NFU - 8HX

## Centring the steering rack

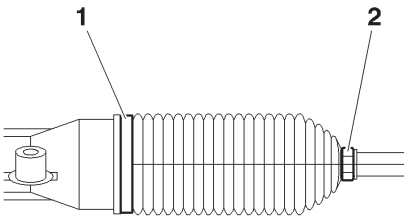


B3EP13UC

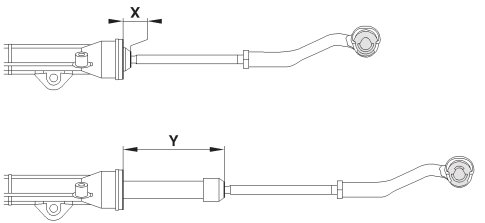


B3EP13VD

**Preliminary operation.**

Raise and support the vehicle on a two-column lift.
Remove, on the RH side of the steering rack:
- Clip **(1)**.
- Clip **(2)**.

Release the steering rack rpotection gaiter.

**Setting.**

Move the steering to full left hand lock.
Measure the dimension **X**.
Move the steering to full right hand lock.
Measure the dimension **Y**.

Calculate the dimension: **L = (Y – X) : 2**.

Refit:
- The steering rack rpotection gaiter.
- New clips **(1)** and **(2)**.

# AXLE GEOMETRY — C3

## Conditions for checking and adjusting

Tyres inflated to correct pressures. Vehicle at reference height.
Steering rack locked at mid point *(see corresponding operation)*.

## Vehicle heights at reference height

### C3

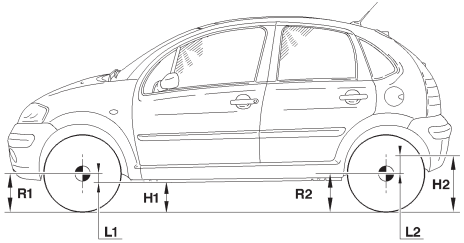


E1AP09MD

| Front height | Rear height |
|---|---|
| **L1** | **L2** |
| **H1 = R1 - L1** | **H2 = R2 + L2** |
| **H1** = Measurement between the measuring zone underneath the front subframe and the ground.<br>**R1** = Front wheel radius under load.<br>**L1** = Distance between the wheel axis and the measuring zone underneath the front subframe. | **H2** = Measurement between the measuring zone underneath the rear sill and the ground.<br>**R2** =Rear wheel radius under load.<br>**L2** = Distance between the wheel axis and the measuring zone underneath the rear sill. |

| C3 | AXLE GEOMETRY |
|---|---|

**Checks at reference height**

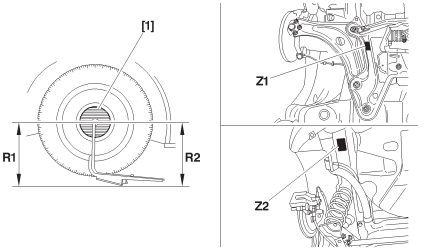


B3CP07SD

| Measuring front height | | | Measuring rear height | | |
|---|---|---|---|---|---|
| **[1]** Gauge for measuring the wheel radius, 4 bolts, tool **4003-T** or **8006-T** *(according to version).* | | | | | |
| **Z1** = Measuring zone underneath the front subframe. | | | **Z2** = Measuring zone underneath the rear sill. | | |
| Measure the radius of the front wheel **R1** - Calculate dimension **H1 = R1 – L1** | | | Measure the radius of the rear wheel **R2** - Calculate dimension **H2 = R2 + L2** | | |
| Value at reference height **(+ 6 - 8 mm)** | All types Except CRD (*) **Raised suspension Sports** | Vehicle CRD (*) **Raised suspension Sports** | Value at reference height **(+ 10 - 6 mm)** | All types Except CRD (*) **Raised suspension Sports** | Vehicle CRD (*) **Raised suspension Sports** |
| | **L1 = 142,5 mm** | **L1 = 132,5 mm** | | **L2 = 52 mm** | **L2 = 62 mm** |

**(*) = CRD** : Difficult road conditions.
Definition for a type of vehicle whose axles and suspensions are adapted for driving on rough roads.
Compress the suspension to obtain the calculated values. The height difference between the two axle dimensions should be less than **10 mm**.

# AXLE GEOMETRY — C3

| Front axle | Rear axle |
|---|---|
| Dissymmetry of lower castor at **0° 30'**.<br>Dissymmetry of lower camber at **0° 18'**.<br>**Distribute symmetrically, LH / RH wheel, the total tracking value.** | Dissymmetry of lower camber at **0° 18'**. |

**All types (except CRD) Raised suspension - Sports**

| Vehicle | | Tracking | Castor (± 0°18') | Camber (± 0°30') | Pivot angle (± 0°30') | Tracking | Camber (± 0°18') |
|---|---|---|---|---|---|---|---|
| | | Adjustable | Non adjustable | | | Non adjustable | |
| All Types | mm | - 2 ± 1 | | | | 5,5 ± 1 | |
| | 0° | - 0°19' ± 0°10' | 3°57' | - 0°28' | 11°26' | 0°50' ± 0°10' | - 1°30' |

**Vehicle CRD Raised suspension - Sports**

| Vehicle | | Tracking | Castor (± 0°18') | Camber (± 0°30') | Pivot angle (± 0°30') | Tracking | Camber |
|---|---|---|---|---|---|---|---|
| | | Adjustable | Non adjustable | | | Non adjustable | |
| All Types | mm | - 2 ± 1 | | | | 5,2 ± 1 | |
| | 0° | - 0°19'± 0°10' | 3°53' | - 0°26' | 11°14' | 0°47' ± 0°10' | -1°28' |

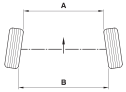


B3CP02UC

| | WARNING | |
|---|---|---|
| **A < B =** Positive figure: | + = | TOE-IN |
| **A > B =** Negative figure: | - = | TOE-OUT |

# AXLE GEOMETRY

## Conditions for checking and adjusting

Tyres inflated to correct pressures. Vehicle at reference height.
Steering rack locked at mid point *(see corresponding operation).*

## Vehicle heights at reference height

### C3 Pluriel

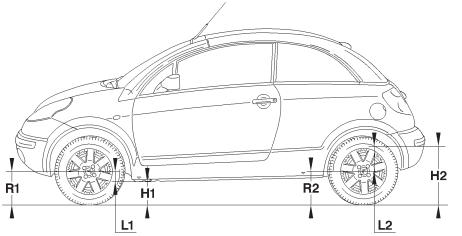


E1AP0AUD

| Front height | Rear height |
|---|---|
| **L1** | **L2** |
| **H1 = R1 - L1** | **H2 = R2 + L2** |
| **H1** = Measurement between the measuring zone underneath the front subframe and the ground.<br>**R1** = Front wheel radius under load.<br>**L1** = Distance between the wheel axis and the measuring zone underneath the front subframe. | **H2** = Measurement between the measuring zone underneath the rear sill and the ground.<br>**R2** =Rear wheel radius under load.<br>**L2** = Distance between the wheel axis and the measuring zone underneath the rear sill. |

## Checks at reference height

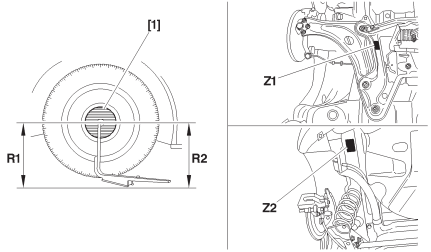


B3CP07SD

| Measuring front height | | Measuring rear height | |
|---|---|---|---|
| **[1]** Gauge for measuring the wheel radius, 4 bolts, tool **4003-T** | | | |
| **Z1** = Measuring zone underneath the front subframe. | | **Z2** = Measuring zone underneath the rear sill. | |
| Measure the radius of the front wheel **R1** - Calculate dimension **H1 = R1 – L1** | | Measure the radius of the rear wheel **R2** - Calculate dimension **H2 = R2 + L2** | |
| Value at reference height **(+ 6 - 8 mm)** | **All Types** | Value at reference height **(+ 10 - 6 mm)** | **All Types** |
| | **L1 = 132,5 mm** | | **L2 = 47 mm** |

**(*) = CRD** : Difficult road conditions.
Definition for a type of vehicle whose axles and suspensions are adapted for driving on rough roads.
Compress the suspension to obtain the calculated values. The height difference between the two axle dimensions should be less than **10 mm**.

| C3 PLURIEL | AXLE GEOMETRY |
|---|---|

| Front axle | Rear axle |
|---|---|
| Dissymmetry of lower castor at **0° 30'**.<br>Dissymmetry of lower camber at **0° 18'**.<br>Distribute symmetrically, LH / RH wheel, the total tracking value. | Dissymmetry of lower camber at **0° 18'**. |

**All types**

| Vehicle | | Tracking | Castor (± 0°18') | Camber (± 0°30') | Pivot angle (± 0°30') | Tracking | Camber (± 0°18') |
|---|---|---|---|---|---|---|---|
| | | Adjustable | Non adjustable | | | Non adjustable | |
| All Types | mm | - 2 ± 1 | | | | 5,7 ± 1 | |
| | 0° | - 0°18' ± 0°09' | 3°53' | - 0°26' | 11°14' | 0°51' ± 0°09' | - 1°30' |

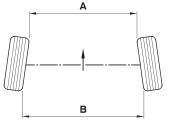


| | WARNING | |
|---|---|---|
| **A < B =** Positive figure: | + = | TOE-IN |
| **A > B =** Negative figure: | - = | TOE-OUT |

B3CP02UC

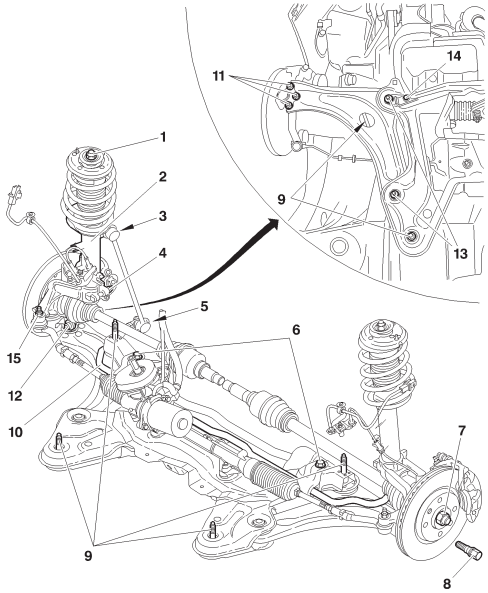


B3CP07RP

**Tightening torques (m.daN).**

| | |
|---|---|
| **(1)** Nut fixing suspension leg on body | **: 6,5 ± 0,6** |
| **(2)** Suspension leg | **:** |
| **(3)** Anti-roll bar link rod upper ball-joint | **: 3,2 ± 0,3** |
| **(4)** Suspension leg pivot | **: 5,4 ± 0,5** |
| **(5)** Anti-roll bar link rod lower ball-joint | **: 3,2 ± 0,3** |
| **(6)** Anti-roll bar bearing fixing on subframe | **: 8 ± 0,8** |
| **(7)** Hub nut | **: 24,5 ± 0,5** |
| **(8)** Wheel bolt | **: 9 ± 1** |
| **(9)** Subframe to bodyshell fixing screw | **: 10 ± 1** |
| **(10)** Anti-roll bar | **:** |
| **(11)** Pivot lower ball-joint fixing on lower arm | **: 5,5 ± 0,5** |
| **(12)** Pivot lower ball-joint fixing | **: 4 ± 0,4** |
| **(13)** Lower arm front and rear mounting fixing | **: 14 ± 0,4** |
| **(14)** Stabiliser bar screw | **: 6,6 ± 0,7** |
| **(15)** Steering ball-joint fixing | **: 3,5 ± 0,3** |

| | | Anti-roll bar | |
|---|---|---|---|
| | | Diameter (mm) | Colour |
| C3 | HFX - KFV<br>KFU - NFU - 8HX<br>8HW - 8HV - 8HY | 19 | Blue |
| C3 Pluriel | KFV - NFU - 8HX | 20 | Green |

# REAR AXLE

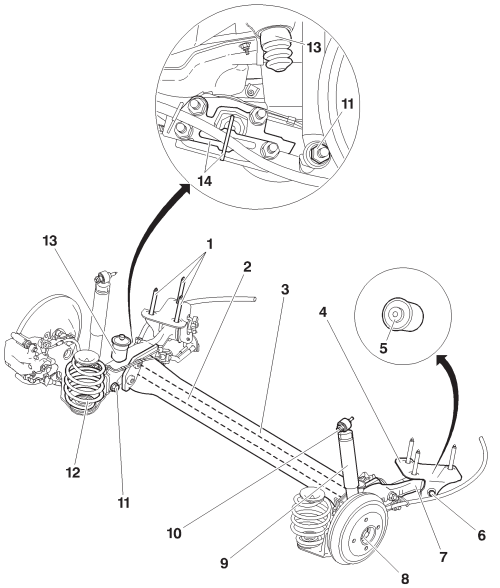


B3CP0AFP

**Tightening torques (m.daN).**

| | |
|---|---|
| **(1)** Rear axle fixing screw | **: 10 ± 1** |
| **(2)** Anti-roll bar | **:** |
| **(3)** Rear axle crossmember | **:** |
| **(4)** Rear suspension arm rubber mounting yoke | **:** |
| **(5)** Rear suspension arm rubber mounting | **:** |
| **(6)** Yoke / suspension arm fixing screw | **: 7,6 ± 0,5** |
| **(7)** Rear suspension arm | **:** |
| **(8)** Stub axle bearing nut | **: 20 ± 2 greased** |
| **(9)** Damper | **:** |
| **(10)** Damper upper fixing | **: 4,5 ± 0,4** |
| **(11)** Damper lower fixing | **: 9,3 ± 1** |
| **(12)** Suspension spring | **:** |
| **(13)** Travel stop | **:** |
| **(14)** Secondary brake cable guide and its support | **:** |

| | | Anti-roll bar |
|---|---|---|
| | | Diameter (mm) |
| C3 | HFX - KFV<br>KFU - NFU - 8HX<br>8HW - 8HV - 8HY | 25,5 *(tubular)* |
| C3 Pluriel | KFV - NFU - 8HX | 26 *(tubular)* |

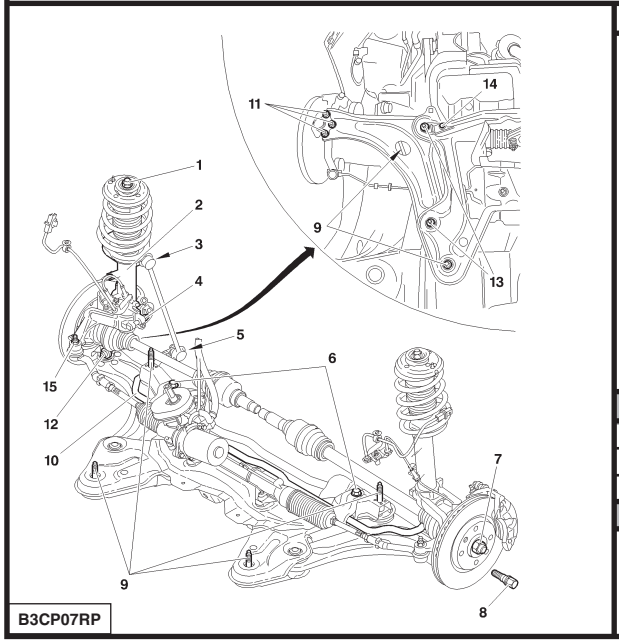


| Front axle | |
|---|---|
| **(1)** Nut fixing suspension leg on body | **: 6,5 ± 0,6** |
| **(2)** Damper | **:** |
| **(3)** Anti-roll bar link rod upper ball-joint | **: 3,2 ± 0,3** |
| **(4)** Suspension leg pivot | **: 5,4 ± 0,5** |
| **(5)** Anti-roll bar link rod lower ball-joint | **: 3,2 ± 0,3** |
| **(6)** Anti-roll bar bearing fixing on subframe | **: 8 ± 0,8** |
| **(7)** Hub nut | **: 24,5 ± 0,5** |
| **(8)** Wheel bolt | **: 9 ± 1** |
| **(9)** Subframe to bodyshell fixing screw | **: 10 ± 1** |
| **(10)** Anti-roll bar | **:** |
| **(11)** Pivot lower ball-joint fixing on lower arm | **: 5,5 ± 0,5** |
| **(12)** Pivot lower ball-joint fixing | **: 4 ± 0,4** |
| **(13)** Lower arm front and rear mounting fixing | **: 14 ± 0,4** |
| **(14)** Stabiliser bar screw | **: 6,6 ± 0,7** |
| **(15)** Steering ball-joint fixing | **: 3,5 ± 0,3** |

**Anti-roll bar**

| | Engines | Diameter (mm) | Colour |
|---|---|---|---|
| C3 | AllTypes | 19 | Blue |
| C3 Pluriel | | 20 | Green |

**Pivot**

| | Engines | Diameter of bearing | Type |
|---|---|---|---|
| C3<br>C3 Pluriel | AllTypes | 72 | In U *(cast iron)* |

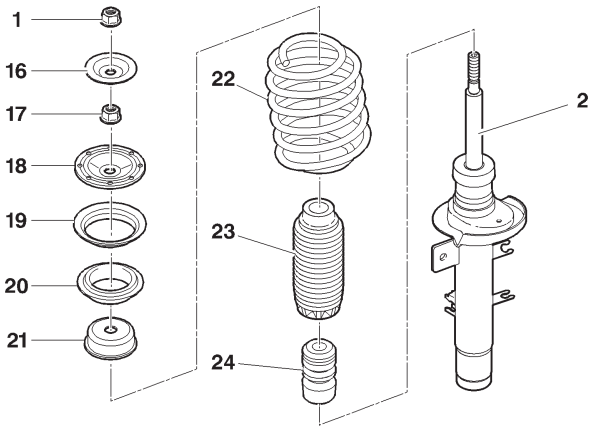


B3BP180D

## Front axle

| | |
|---|---|
| **(1)** Nut fixing suspension leg on body | **: 6,5 ± 0,6** |
| **(2)** Damper | |
| **(16)** Cup | |
| **(17)** Damper nut. | **: 6,5 ± 0,6** |
| **(18)** Damper cup | |
| **(19)** Ball bearing | |
| **(20)** Spring thrust cup | |
| **(21)** Travel stop cup | |
| **(22)** Suspension spring | |
| **(23)** Damper rod rpotector | |
| **(24)** Travel stop | |

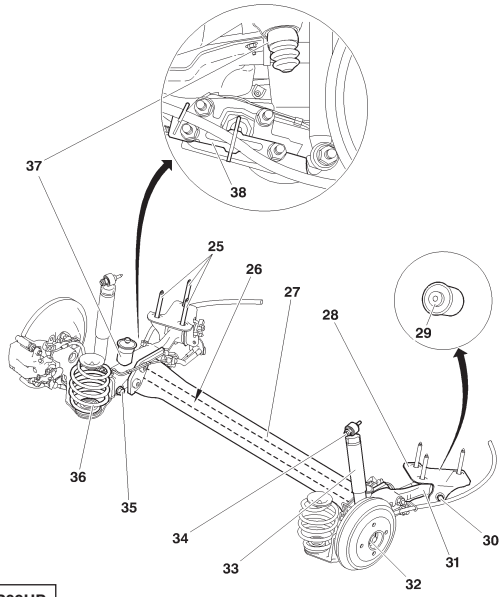


B3CP09UP

## Rear axle

| | |
|---|---|
| **(25)** Rear axle fixing screw | **: 10 ± 1** |
| **(26)** Anti-roll bar | **:** |
| **(27)** Rear axle crossmember | **:** |
| **(28)** Rear suspension arm silentblock mounting yoke | **:** |
| **(29)** Rear suspension arm silentblock | **:** |
| **(30)** Suspension arm fixing screw on yoke | **: 7,6 ± 0,5** |
| **(31)** Rear suspension arm | **:** |
| **(32)** Stub axle bearing nut | **: 20 ± 2 greased** |
| **(33)** Damper | : |
| **(34)** Damper upper fixing screw | **: 4,5 ± 0,4** |
| **(35)** Damper lower fixing screw | **: 9,3 ± 0,9** |
| **(36)** Suspension spring | **:** |
| **(37)** Travel stop | **:** |
| **(38)** Secondary brake cable guide support | **:** |

## Anti-roll bar

| | Engines | Diameter (mm) |
|---|---|---|
| **C3** | **AllTypes** | **25,5 *(tubular)*** |
| **C3 Pluriel** | | **26 *(tubular)*** |

# FEATURES OF ELECTRIC POWER STEERING

**Engines: HFX - KFV - KFU - NFU - 8HX - 8HW - 8HV - 8HY**

## Steering column

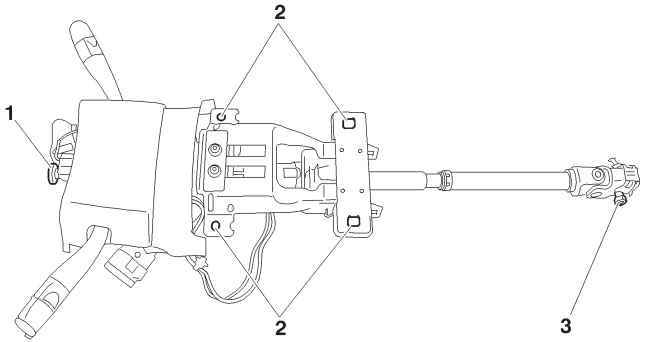


B3EP13GD

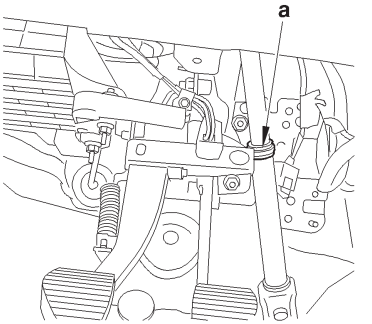


B3EP13HC

### Tightening torques m.daN.

| | |
|---|---|
| **(1)** Steering wheel fixing | **: 2 ± 0,3** |
| **(2)** Steering column fixing on support | **: 2,2 ± 0,5** |
| **(3)** Steering cardan fixing | **: 2,2 ± 0,2** |

### Identification.

Identified by the colour of the ring at «**a**».

| | |
|---|---|
| Left hand drive | **: BLUE ring**. |
| Right hand drive | **: WHITE ring**. |

## Engines: HFX - KFV - KFU - NFU - 8HX - 8HW - 8HV - 8HY

### Steering mechanism

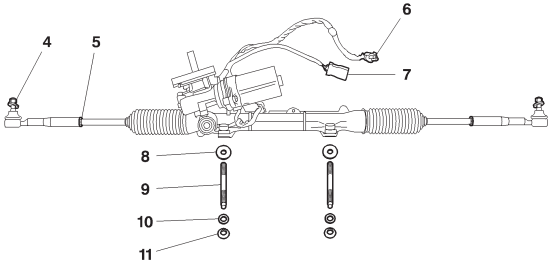


B3EP13JD

**Tightening torques m.daN.**

| | |
|---|---|
| **(4)** Ball-joint fixing on pivot | **: 3,5 ± 0,3** |
| **(5)** Steering rod lock-nut | **: 5 ± 0,5** |
| **(8)** Threaded washer | |
| **(9)** Stud | **: 0,8 ± 0,1** |
| **(10)** Flat washers | |
| **(11)** Fixing of mechanism on subframe | **: 8 ± 0,8** |

| | HFX - KFV - 8HX - 8HW | KFV (BVA) NFU - 8HY - 8HV |
|---|---|---|
| **Electric motor** | **60 A** | **65 A** |
| **Steering rack travel** | **2x72** | **2x64** |
| **Steering ratio** | **45,6/1** | |
| **Number of rotations of steering wheel** | **3,2** | **2,8** |
| **Inner angle of lock** | **38°** | **32°30'** |
| **Outer angle of lock** | **32°24'** | **28°42'** |

**Connectors.**

**(6)** Supply of electric assistance motor

**(7)** Torque sensor signals

# FEATURES OF ELECTRIC POWER STEERING

**Engines: HFX - KFV - KFU - NFU - 8HX - 8HW - 8HV - 8HY**

## Steering assistance

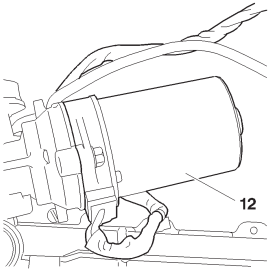


B3EP13KC

Supplier: **KOYO**.

The steering assistance is rpovided by the assistance motor **(12)**, controlled by the ECU.

Power delivered to the assistance motor **(12)** depends on:

- Speed of the vehicle.
- Torque applied on the steering wheel.

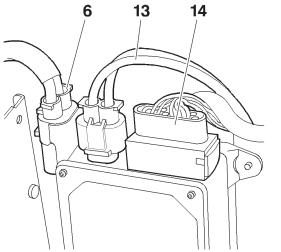


B3EP13LC

**Electric power-assisted steering ECU.**

Only one ECU version, whatever the engine-type.

The electric power steering ECU is linked to the following connectors:
- **(6)** Assistance motor supply.
- **(13)** Electric power steering ECU supply.
- **(14)** Control signals.

After changing the electric power steering ECU, it is necessary to perform a configuration *(see corresponding operation)*.

**Engines: HFX - KFV - KFU - NFU - 8HX - 8HW - 8HV - 8HY**

## Centring the steering rack

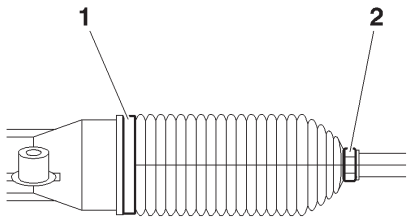


B3EP13UC

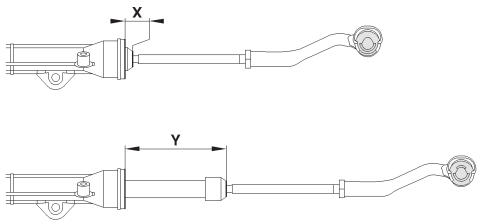


B3EP13VD

**Preliminary operation.**

Raise and support the vehicle on a two-column lift.
Remove, on the RH side of the steering rack:
- Clip **(1)**.
- Clip **(2)**.

Release the steering rack rpotection gaiter.

**Setting.**

Move the steering to full left hand lock.
Measure the dimension **X**.
Move the steering to full right hand lock.
Measure the dimension **Y**.

Calculate the dimension: **L = (Y – X): 2**.

Refit:
- The steering rack rpotection gaiter
- New clips **(1)** and **(2)**.

## Front and rear measuring points

### XSARA ALL TYPES N°RPO 8667 ➔

| Front height | Rear height |
|---|---|

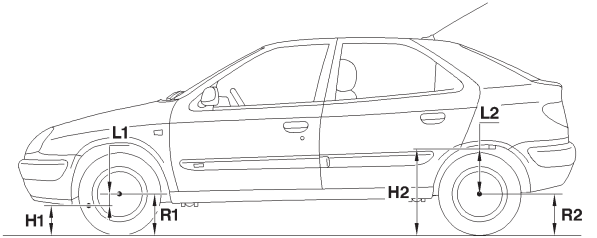


B3CP06ZD

**H1** = Dimension between the centre of the front suspension arm mounting and the ground.
**H2** = Dimension between the contact face of the rear mounting and the ground.
**R1** = Front wheel radius under load.
**R2** = Rear wheel radius under load.
**L1** = Distance between the centre of the wheel and the centre of the front suspension arm mounting.
**L2** = Distance between the centre of the wheel and the contact face of the rear mounting on the bodyshell.

## Reference heights

| | | |
|---|---|---|
| **Tools.** | **[1]** Gauge for measuring the radius of wheels with 4 bolts | **: 4300-T N°RPO 9429 ➔** |

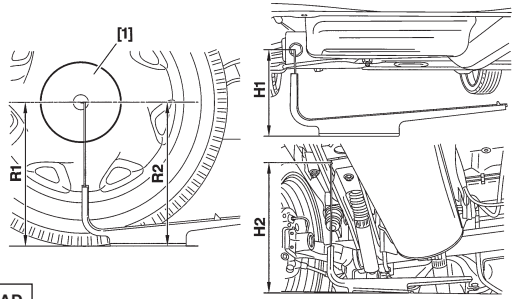


B3CP04AD

**Setting the reference height.**

| Front | Front |
|---|---|
| Measure the dimension «**R1**».<br>Calculate the dim. **H1 = R1 - L1**. | Measure the dimension «**R2**».<br>Calculate the dim. **H2 = R2 + L2**. |

Compress the suspension until the values **(H1)** and **(H2)** are obtained.

**NOTE:** The difference in height between the two sides should be less than **10 mm**.

| | Front axle | | | Rear axle | | | |
|---|---|---|---|---|---|---|---|
| **Engines** | **2.0i 16V (RFS)** | **All engines (except 2.0 i 16V and CRD)** | **All CRD engines** | **2.0i 16V (RFS)** | **All Saloon (except 2.0i 16V and CRD)** | **Estate** | **All CRD engines** |
| **Reference heights (in mm)** | **115,5** | **90,5** | **75,5** | **73** | **83** | **88** | **103** |

## Values of the front and rear suspensions, at reference height

**ESSENTIAL: When checking the suspensions, the vehicle should be at reference height.**

**Tools.**

Compress the suspension, to obtain the values at reference height.

| | |
|---|---|
| **[1]** Set of two suspension compressors | **: 9511-T.A** |
| **[2]** Set of four straps | **: 9511-T.B** |
| **[3]** Set of four shackles | **: 9511T.C** |

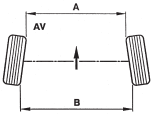


| | WARNING | |
|---|---|---|
| **A < B =** Positive figure: | + = | TOE-IN |
| **A > B =** Negative figure: | − = | TOE-OUT |

B3CP04LC

| AXLE GEOMETRY | | | | | | | XSARA |
|---|---|---|---|---|---|---|---|
| Values of the front and rear suspensions, at reference height | | | | | | | |
| Front axle | | | | | | | |
| | Tolerances | Adjustable | Saloon or entreprise KFW | Saloon all engine typesexcept KFW Estate all engine types except CRD (*) | Saloon CRD (*) KFW | 2.0i 16V (RFS) | Saloon CRD (*) all engine types except KFW Estate CRD (*) all engine types |
| Tracking | ± 1 mm | YES | - 1,5 ± 1 mm | | | | |
| | | | - 0°15' ± 10' *(toe-out)* | | | | |
| Castor | ± 18' | NO | 3° | | 2°55' | 3° ± 07' | 2°55' |
| Pivot angle | ± 30' | | 10°40' | 10°44' | 10°22' | 11° ± 07' | 10°26' |
| Camber | ± 30' | | 0° | | 0°12' | - 0° ± 07' | 0°07' |
| Rear axle | | | | | | | |
| | Tolerances | Adjustable | Saloon all engine types Saloon entreprise | 2.0i 16V (RFS) | Estate all engine types | Saloon CRD (*) all engine types Estate CRD (*) all engine types | |
| Tracking | ± 1,3 mm | YES | 4,54 ± 1,3 mm | 5,1 ± 1,3 mm | 4,27 ± 1,3 mm | 3,45 ± 1,3 mm | |
| | | | 0°41' ± 11' | 0°46' ± 11' | 0°39' ± 11' | 0°31' ± 10' | |
| Camber | ± 15' | NO | - 0°57' | | - 0°58' | - 0°59' | |

**(*) CRD** = Difficult road conditions.

# AXLE GEOMETRY

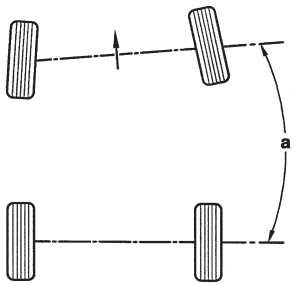


B3CP04UC

**a** = Angle which defines the tracking between the front and rear axles.

Its value must not exceed **12'**.

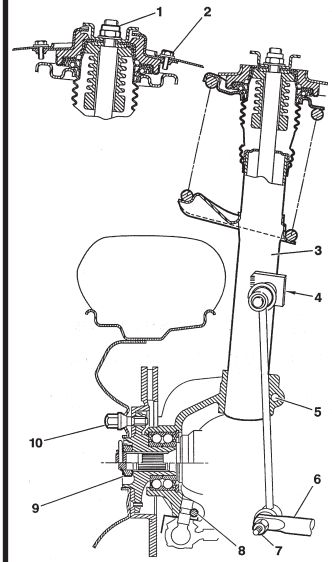


B3CP040P | B3CP041D

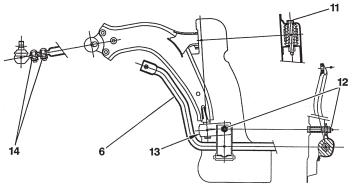


Vehicles **RPO 8667 ➔** are all equipped as standard with ventilated discs.

**Tightening torques (m.daN).**

| | |
|---|---|
| **(1)** Damper nut | **: 4,5 ± 0,4** |
| **(2)** Cup screw | **: 2,5 ± 0,3** |
| **(3)** Suspension leg | |
| **(4)** Anti-roll bar link rod upper ball-joint | **: 3,7 ± 0,3** |
| **(5)** Suspension leg pivot (hollow pivot) | **: 4,5 ± 0,5** |
| **(5)** Suspension leg pivot (pivot «**H**») | **: 5,5 ± 0,5** |
| **(6)** Anti-roll bars | |
| **(7)** Anti-roll bar link rod lower ball-joint | **: 3,7 ± 0,3** |
| **(8)** Pivot lower ball-joint | **: 4 ± 0,4** |
| **(9)** Driveshaft nut | **: 32,5 ± 2,5** |
| **(10)** Wheel bolt | **: 9 ± 1** |
| **(11)** Lower arm front mounting | **: 7,6 ± 0,7** |
| **(12)** Lower arm rear mounting and anti-roll bar bearing | **: 6,8 ± 0,6** |
| **(13)** Screw under rear mounting | **: 3,1 ± 0,3** |
| **(14)** Ball-joint fixing on lower arm | **: 5 ± 0,5** |
| Subframe to bodyshell fixing screw | **: 8,5 ± 0,8** |

## Evolution: Suspension arm ball-joint

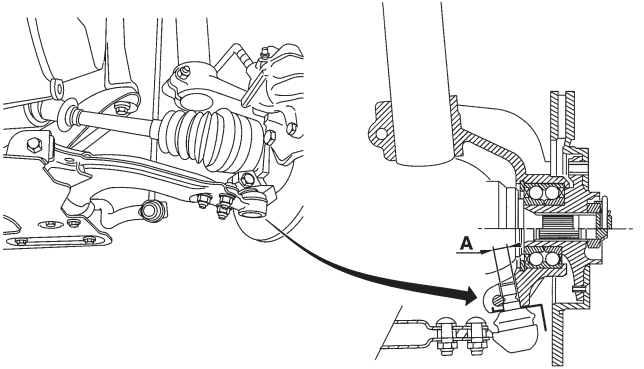


B3CP054D

**Application from RPO: 7968.**

**New components:**
- Suspension arm ball-joint.
- Pivot.

| | |
|---|---|
| Old fitting | **ØA = 16 mm**. |
| New fitting | **ØA = 18 mm**. |

**Repair requirements.**

**ESSENTIAL: Swapping of old and new components is forbidden.**

It is permitted to fit a new pivot/ball-joint assembly on one side of an old vehicle.

**Replacement Parts.**

The old components are still available from Replacement Parts.

| | | Anti-roll bar | |
|---|---|---|---|
| **Engine versions** | | **Diameter** | **colour reference** |
| **1.6i - 1.6i 16V - 1.9 D 2.0i 16V (RFV) - 1.4 HDi - 2.0 HDi** | **Saloon** | 19 | Blue |
| | **Estate** | 20 | Yellow |
| **2.0i 16V (RFS)** | **Saloon** | 21 | White |

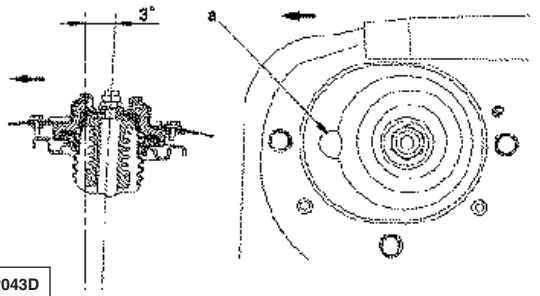


B3CP043D

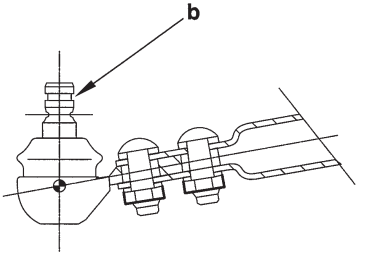


B3CP049C

**Pivot ball-joint:**

- Manual steering, groove at «**b**».

- Power steering, groove at «**b**».

**Tongue «a» towards the front.**

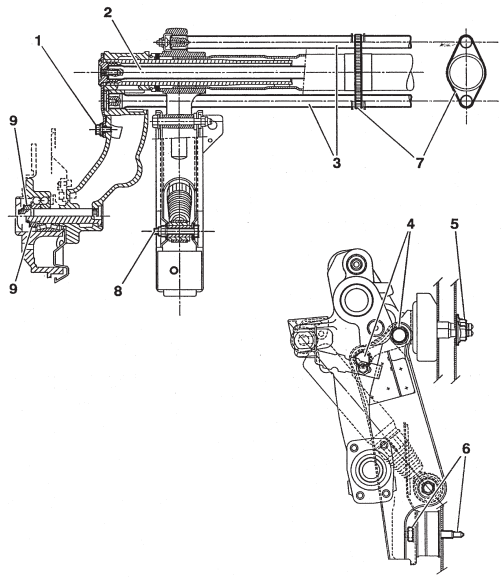


B3DP04SP

**Tightening torques (m.daN).**

| | |
|---|---|
| **(1)** Anti-roll bar lever | **: 3,2 ± 0,3** |
| **(2)** Anti-roll bar | |
| **(3)** Transversal torsion bars | |
| **(4)** Rear crossmember flanges | **: 8,3 ± 0,8** |
| **(5)** Front silentblocks | **: 5,5 ± 0,5** |
| **(6)** Rear silentblocks | **: 4,5 ± 0,4** |
| **(7)** Anti-vibration clamp | |
| **(8)** Damper pin | **: 9,6 ± 0,9** |
| **(9)** Stub axle nuts *(lubricated)* | **: 18,5 ± 1** |

**NOTE:**

- The **RH** torsion bar is identified by **1 paint line**.

- The **LH** torsion bar is identified by **2 paint lines**.

| XSARA | REAR AXLE | | | | |
|---|---|---|---|---|---|
| | Vehicles | Torsion bars (mm) | | Anti-roll bar (mm) | |
| Engines | | Diameter | colour reference | Diameter | colour reference |
| 1.9 D | 3-door Entreprise | 19,3 | Violet | 19 | Orange |
| | 3- and 5-door TT exc. Entreprise | 18,7 | yellow | 18 | Blue |
| | Estates All types | 20 | Grey | 20 | Green |
| 1.6i 16V - 2.i 16V 1.4 HDi - 2.0 HDi | 3- and 5-door TT | 19,3 | Violet | 19 | Orange |
| | Estates All types | 20 | Grey | 20 | Green |
| 2.0i 16V | 3-door VTS | 21 | Light green | 23 | Without colour, or white sticker |
| Grand Export «CRD» | 3- and 5-door TT | 19,3 | Violet | 19 | Orange |
| | Estates All types | 20 | Grey | 20 | Green |

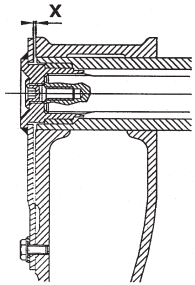


B3DP04TC

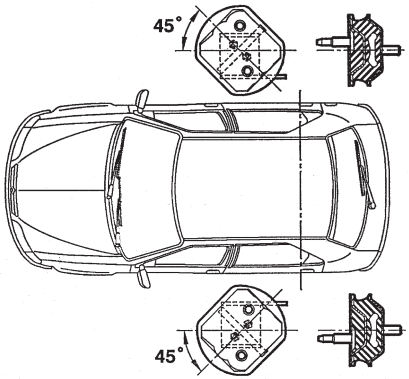


B3DP04UD

**Operating clearance - X = 1 to 1.4 mm.**

**NOTE:** The RH torsion bar can be identified by **1 paint line**.

The LH torsion bar can be identified by **2 paint lines**.

- The **front** silentblocks are aligned at an angle of **45° in relation to the vehicle's axis**.
- The **rear** silentblocks are **in parallel with the vehicle's axis**.

**NOTE:** There are two suppliers for the silentblocks:

- **RBT**, identified by a Green or Yellow painted dot on the side of the mounting.
- **PAULSTRA**, identified by a **Black** painted dot on the side of the mounting.

It is **FORBIDDEN** to swap components of different suppliers.

# REAR DAMPER

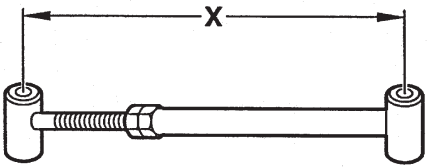


E5AP14WC

**Adjusting the rear dummy damper**

| Engines | Lengths of the rear dummy damper (mm) | |
|---|---|---|
| | Normal driving | Grand export |
| 1.9 D | 339 | 346 |
| 1.6i 16V 3-door | | 339 |
| 1.6i 16V 5-door<br>2.0i 16V (RFN) - 1.4 HDi<br>2.0 HDi | | 346 |
| 2.0i 16V (RFS) | 318 | |
| Estates and<br>Entreprise all types | 336 | 342 |

## Steering wheel - Manual steering

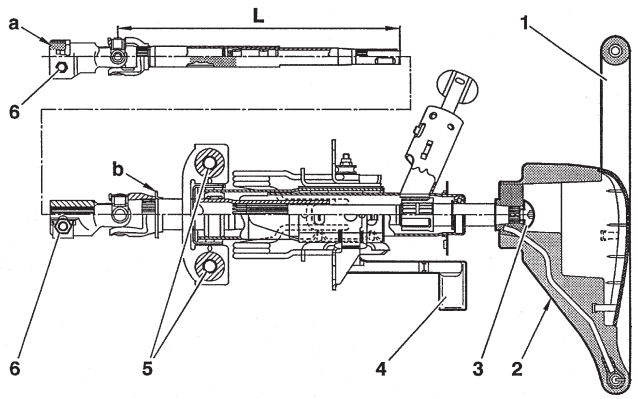


B3EP08PD

- **(a)** : LHD/RHD = **White**.
- **(L)** : Shaft length = **311 ± 1.5 mm**.
- **(1)** Steering wheel fitted with AIRBAG *(according to equipment)*.
- **(4)** Steering column adjustment lever.

**Tightening torques (m.daN).**

| | |
|---|---|
| - **(2) AIRBAG** to steering wheel fixing | **: 0.8** |
| - **(3)** Steering wheel fixing | **: 3.3** |
| - **(5)** Steering column to support fixing | **: 2.3** |
| - **(6)** Steering cardan joint fixing | **: 2.3** |

- **(b) = Locating bush**.

The locating bush must be centred in the reference window before tightening the cardan bolts **(6)**.

## Manual steering

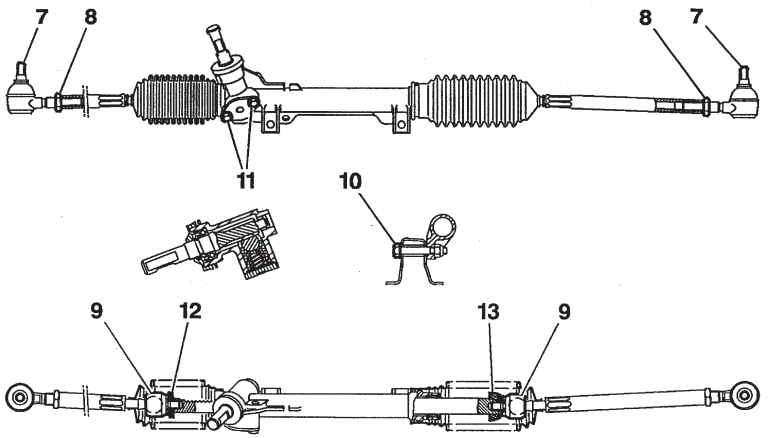


B3EP042D

**Tightening torques (m.daN).**

| | |
|---|---|
| **(7)** Pivot ball-joint nut | **: 4** |
| **(8)** Link rod lock nut | **: 4.5** |
| **(9)** Ball-joint on steering rack | **: 6** |
| **(10)** Fixing on cradle | **: 5** |
| **(11)** Plunger flange screw | **: 1.2** |

**Manual steering (continued)**

| | Steering rack travel (mm) | Number of teeth | | Steering stop colour code | Number of steering wheel turns | Steering ratio |
|---|---|---|---|---|---|---|
| | | Pinion | Steering rack | | | |
| **Left hand drive** | **73,5** | **6 teeth** *(RH helix)* | **29** | **(13)** **Yellow** thickness **mm** | **4,3** | **22/1** |

- Length of the steering track rods *(Pre-adjustment)* = **371** mm *(Between ball-joint centres)* or **391** mm *(Between the centre of the pivot ball-joint and the contact face of the steering rack ball-joint)*.

## Steering wheel - Power-assisted steering

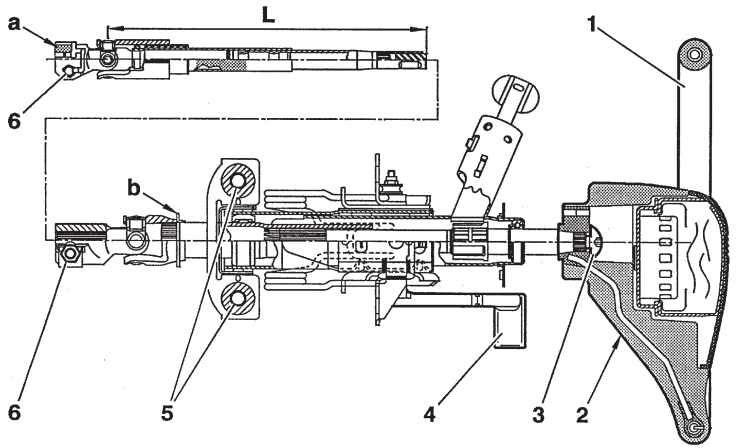


B3EP08QD

- **(a)** : LHD = **Blue**.
  : RHD = **White**.
- **(L)**: Shaft length = **311 ± 1.5 mm**.
- **(1)** Steering wheel fitted with **AIRBAG** *(according to equipment)*.
- **(4)** Steering column adjustment lever.

**Tightening torques (m.daN).**

| | |
|---|---|
| - **(2) AIRBAG** to steering wheel fixing | **: 0.8** |
| - **(3)** Steering wheel fixing | **: 3.3** |
| - **(5)** Steering column to support fixing | **: 2.3** |
| - **(6)** Steering cardan joint fixing | **: 2.3** |

- **(b) = Locating bush**.

The locating bush must be centred in the reference window before tightening the cardan bolts **(6)**.

## Power-assisted steering

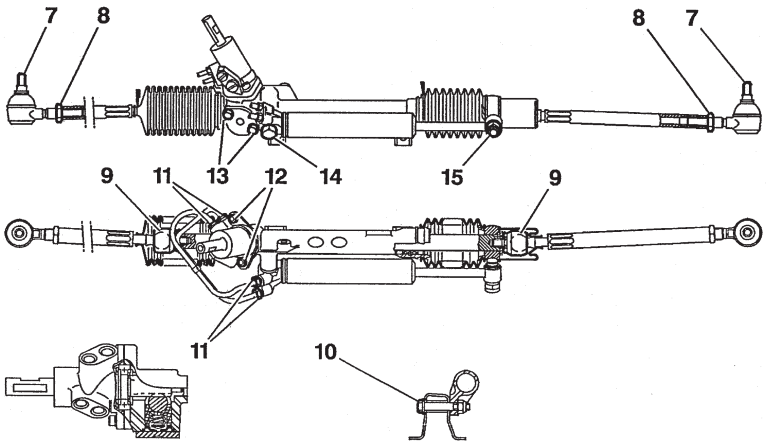


B3EP08RD

**Tightening torques (m.daN).**

| | | |
|---|---|---|
| **(7)** | Pivot ball-joint nut | **: 4** |
| **(8)** | Link rod lock nut | **: 4.5** |
| **(9)** | Ball-joint on steering rack | **: 6** |
| **(10)** | Fixing on subframe | **: 5** |
| **(11)** | Hydraulic pipe connection | **: 2.5** |
| **(12)** | Valve to housing fixing | **: 1.2** |
| **(13)** | Plunger flange screw | **: 1.2** |
| **(14)** | Screw fixing the steering ram to the housing | **: 5.5** |
| **(15)** | Nut fixing the steering ram to the yoke | **: 5.5** |

## Power-assisted steering (Continued)

| | Steering rack travel (mm) | Number of teeth | | Number of steering wheel turns | Steering ratio |
|---|---|---|---|---|---|
| | | Pignon | Steering rack | | |
| LHD | 71,7 | (*) *(RH helix)* | 28 | 3,3 | 18,8/1 |

| | Steering valve | |
|---|---|---|
| Vehicles | Protector colour | Number of teeth (*) |
| All Types (except 1.6i 16V - 1.9 TD) | BLACK | 7 |
| 1.6i 16V - 1.9 TD | ORANGE | 8 |

- Length of the steering link rods *(Pre-adjustment)* = **371** mm *(Between ball-joint centres)* or **391** mm *(Between the centre of the pivot ball-joint and the contact face of the steering rack ball-joint).*

## Power-assisted steering assembly

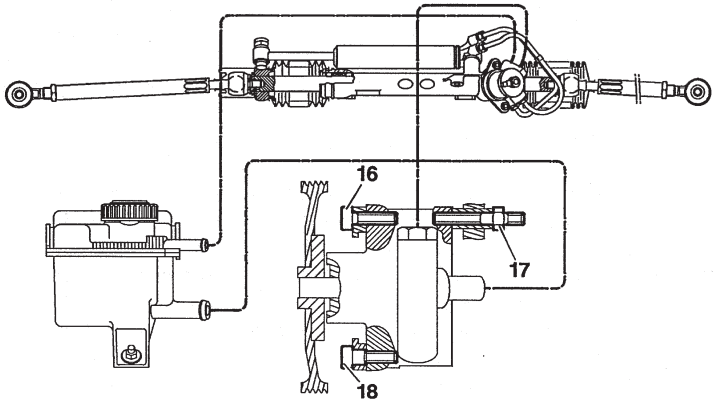


Power-assisted steering system capacity = **1 litre**.
Oil type: **TOTAL FLUIDE ATX**.
SAGINAW Pump adjustment = **100 Bars ± 5**.
Pump shaft threading **3/8 - 16 threads per inch**.

B3EP045D

### Tightening torques (m.daN).

High pressure tube *(Rubber seal pump side)*
- Power-assisted valve and pump union **: 2.5**

### Return pipe.

- Power-assisted valve union **: 2.5**
- **(16)** Upper front fixing **(E3)** **: 2.5**
- **(17)** Upper rear fixing **(E3)** **: 2.2**
- **(18)** Fixing **(E3)** **: 2.2**

### Tightening sequence.

-Tighten screws **(16)** and **(18)**.
-Lightly tighten screw **(17)**, then fully tighten.

### Pressure switch on the pressure circuit.

- Switch opens **30** to **35 Bars.**
- Switch closes **25 Bars**.
- Tighten to : **2 m.daN**.

**Checks at reference height**

**WARNING: The values shown should only be used as guides. In case of doubt, check the settings at reference height**

**Conditions for checking and adjusting:** Tyres inflated to correct pressures. Vehicle at reference height. Steering rack locked at mid point *(see corresponding operation).*

**NOTE:** To make the setting of reference height easier, it is acceptable to take the measurement from the flange of the jacking point.

**Front height**

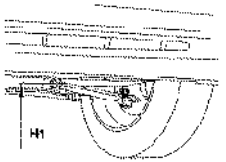


B3CP05BC

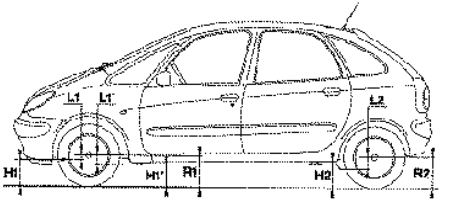


B3CP058D

**Rear height**

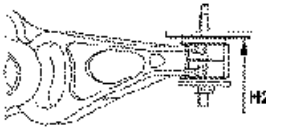


B3DP079C

**H1 = R1 – L1 H1' = R1 – L1'**

**H1** = From the front suspension arm linkage bolt axis to the ground.
**R1** = Radius of the front wheel when laden.
**L1** = From the centre of the wheel to the front suspension arm linkage bolt axis.
**H1'** = From the front jacking point to the ground.
**L1'** = From the front jacking point to the radius of the front wheel when laden.

**H2 = R2 - L2**

**H2** = From the rear axle silentblock face to the ground.
**R2** = Radius of the rear wheel when laden.
**L2** = From the centre of the wheel to the rear axle silentblock face.

| AXLE GEOMETRY | XSARA PICASSO |
|---|---|

**Checks at reference height** *(the reference height of the vehicle is set as per the table below).*

| Front axles | | Rear axle |
|---|---|---|
| 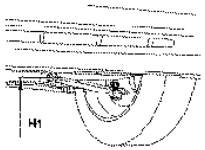  B3CP05BC |   B3CP05AC |   B3DP079C |

| NO - CRD Vehicle *(CRD = Difficult road conditions)* | | |
|---|---|---|
| **Engines: NFV - 6FZ - RFN - 9HZ - 9HY - RHY** | | |
| **Front axles** | | **Rear axle** |
| **H1 = R1 – L1** ou **H1' = R1 – L1'** | | **H2 = R2 + L2** |
| **L1 = 90,5 mm** | **L1' = 124 mm** | **L2 = 8,5 mm** |
| **Value at reference height (-8/+3 mm)** | | **Value at reference height (+10/-3 mm)** |
| Measure the radius of the front wheel: **R1**.<br>Calculate dimension **H1** or **H1'**. | | Measure the radius of the rear wheel: **R2**.<br>Calculate dimension **H2**. |

Compress the suspension to obtain the calculated values.

**NOTE:** The difference in height between the two sides should be less than **10 mm**.

| XSARA PICASSO | AXLE GEOMETRY |
|---|---|

**Checks at reference height** *(the reference height of the vehicle is set as per the table below).*

**NO - CRD Vehicle (*CRD = Difficult road conditions)***

| | Front axle | | | | Rear axle | |
|---|---|---|---|---|---|---|
| Vehicle | Tracking | Castor | Pivot angle | Camber | Tracking | Camber |
| **Adjustable** | **Yes** | **No** | | | | |
| **All types** | **0 ± 1 mm<br>- 0°09' at + 0°09'** | **3° ± 18'** | **10°43' ± 30'** | **0° ± 30'** | **4,8 ± 1,3 mm<br>- 0°43' ± 0°12'** | **- 1°13' ± 18'** |

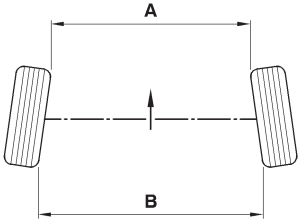


| | WARNING | |
|---|---|---|
| **A < B =** Positive figure: | + = | TOE-IN |
| **A > B =** Negative figure: | – = | TOE-OUT |

B3CP02UC

| AXLE GEOMETRY | XSARA PICASSO |
|---|---|

**Checks at reference height** *(the reference height of the vehicle is set as per the table below).*

| Front axle | | Rear axle |
|---|---|---|
| 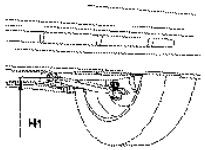  B3CP05BC |   B3CP05AC |   B3DP079C |

**NO - CRD Vehicle *(CRD = Difficult road conditions)***

**Engines: NFV - RFN - RHY**

| Front axle | | Rear axle |
|---|---|---|
| **H1 = R1 – L1** or | **H1' = R1 – L1'** | **H2 = R2 + L2** |
| **L1 = 75,5 mm** | **L1' = 109 mm** | **L2 = 23,5 mm** |
| Measure the radius of the front wheel: **R1**.<br>Calculate dimension **H1** or **H1'**. | | Measure the radius of the rear wheel: **R2**.<br>Calculate dimension **H2**. |

Compress the suspension to obtain the calculated values.

**NOTE:** The difference in height between the two sides should be less than **10 mm**.

| XSARA PICASSO | AXLE GEOMETRY |
|---|---|

**Checks at reference height** *(the reference height of the vehicle is set as per the table below).*

**CRD Vehicle *(CRD = Difficult road conditions)***

**Engines: NFV - RFN - RHY**

| Front axle | | | | | Rear axle | |
|---|---|---|---|---|---|---|
| Vehicle | Tracking | Castor | Pivot angle | Camber | Tracking | Camber |
| **Adjustable** | **Yes** | **No** | | | | |
| **All types** | **- 1 ± 1 mm<br>- 0°18' at 0°0'** | **2°56' ± 18'** | **10°25' ± 30'** | **0°07' ± 30'** | **3,7 ± 1,3 mm<br>- 0°33' ± 0°12'** | **- 1°14' ± 18'** |

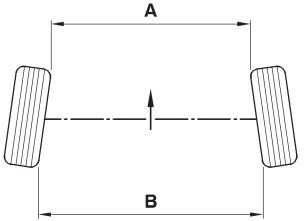


| | WARNING | |
|---|---|---|
| **A < B =** Positive figure: | + = | TOE-IN |
| **A > B =** Negative figure: | – = | TOE-OUT |

B3CP02UC

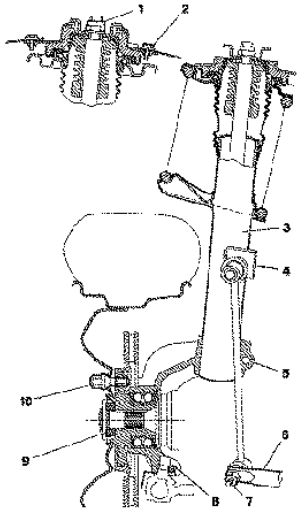


B3CP056P

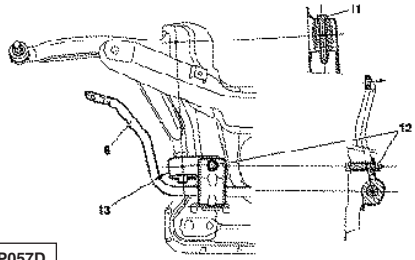


B3CP057D

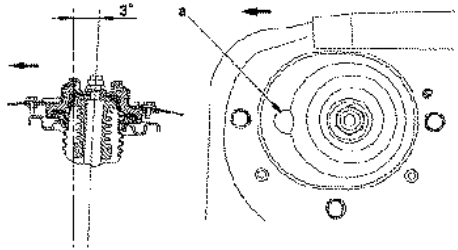


**Suspension leg angle :**
Tab «**a**» towards the front.

B3CP043D

**Tightening torques m.daN.**

| | |
|---|---|
| **(1)** Damper nut | **: 4.5 ± 0.4** |
| **(2)** Cup screw | **: 2.5 ± 0.2** |
| **(3)** Suspension leg | |
| **(4)** Anti-roll bar link rod ball-joint | **: 3.7 ± 0.3** |
| **(5)** Suspension leg swivel | **: 4.5 ± 0.4** |
| **(6)** Anti-roll bar | |
| **(7)** Anti-roll bar link rod ball-joint | **: 3.7 ± 0.3** |
| **(8)** Lower swivel ball-joint | **: 4 ± 0.4.** |
| **(9)** Hub nut *(greased)* | **: 32.5 ± 2** |
| **(10)** Wheel bolt *(face and threads not greased)* | **: 9 ± 1** |
| **(11)** Lower arm front pivot | **: 7.6 ± 0.7** |
| **(12)** Lower arm rear pivot and anti-roll bar bearing | **: 6.8 ± 0.6** |
| **(13)** Screw under rear pivot | **: 3.5 ± 0.3** |
| - Lower arm in forged steel | **: 3.7 ± 0,3** |
| - Lower arm in plate steel | **: 3.1 ± 0,3** |
| Screw fixing subframe on bodyshell | **: 8.5 ± 0,8** |
| Screw fixing ball-joint on lower arm *(plate steel)* | **: 4.5 ± 0,4** |

**Anti-roll bar**

| Engine | Diameter | colour reference |
|---|---|---|
| **All Types** | **21** | **WHITE** |

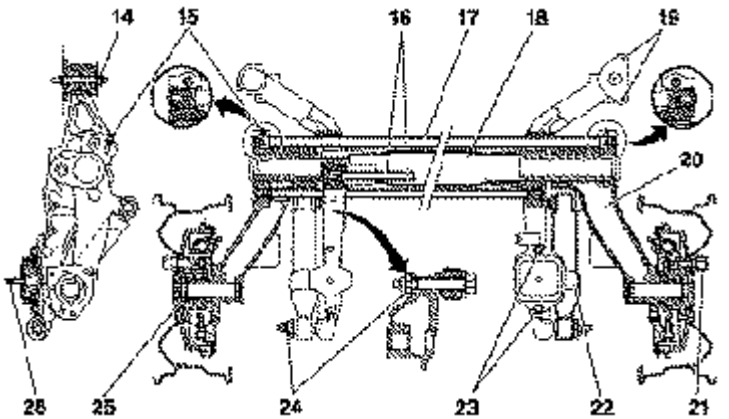


B3DP078D

**Tightening torques m.daN.**

| | |
|---|---|
| **(14)** Front silentblock on subframe | **: 9.4 ± 0.9** |
| **(15)** Anti-roll bar bolt | **: 5.5 ± 0.5** |
| **(16)** Rear torsion bar | |
| **(17)**Anti-roll bar | |
| **(18)** Tubular axle | |
| **(19)** Front silentblock on bodyshell | **: 4 ± 0.4** |
| **(20)** Rear upper arm. | |
| **(21)** Wheel bolt *(face and threads not lubricated)* | **: 9 ± 1** |
| **(22)** Damper | |
| **(23)** Rear silentblock on subframe | **: 5.4 ± 0.5** |
| **(24)** Damper pin nut | **: 11 ± 1** |
| **(25)** Stub axle nuts *(lubricated)* | **: 25 ± 2** |
| **(26)** Rear silentblock on bodyshell | **: 6.5 ± 0.6** |

| | Torsion bar | | Anti-roll bar | |
|---|---|---|---|---|
| **Engine** | **Ø (mm)** | **Colour reference** | **Ø (mm)** | **Colour reference** |
| **All Types** | **19,6** | **PINK** | **21** | **ORANGE** |

**NOTE:** The RH torsion bar can be identified by **1 paint line**.
The LH torsion bar can be identified by **2 paint lines**.

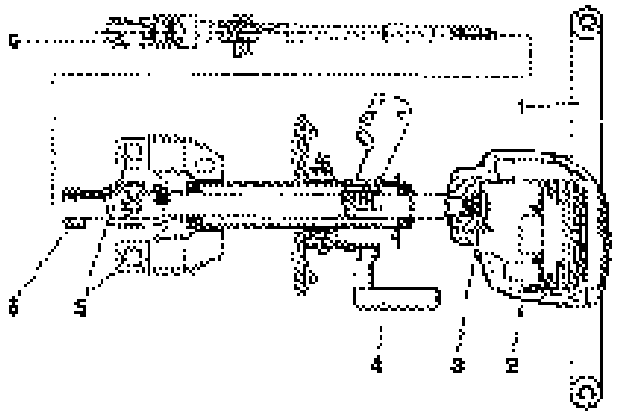


B3EP116D

Left hand drive = **Green** marking.
Right hand drive = **White** marking.

**(1)** Steering wheel
**(4)** Steering column adjustment

**Tightening torques m.daN.**

| | |
|---|---|
| **(2)** Airbag to steering wheel fixing | **: 0.8 ± 0.1** |
| **(3)** Steering wheel fixing | **: 3.3 ± 0.6** |
| **(5)** Steering column to support fixing | **: 4 ± 0.1** |
| **(6)** Steering cardan joint fixing | **: 2.3 ± 0.2** |

# STEERING COLUMN SPECIFICATIONS

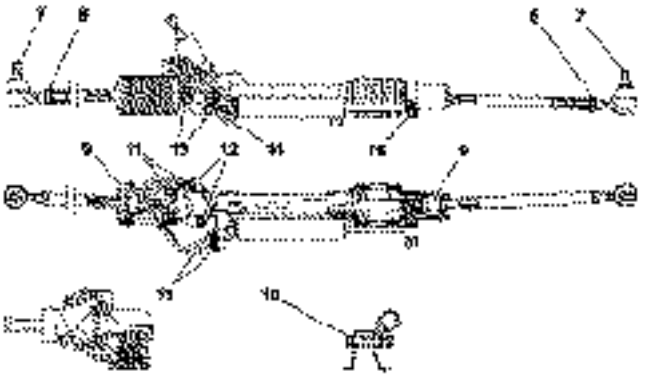

B3EP117D

**Tightening torques (m.daN).**

| | |
|---|---|
| **(7)** Pivot ball-joint nut | **: 4 ± 0.4** |
| **(8)** Steering rod adjusting lock nut | **: 4.5 ± 0.4** |
| **(9)** Ball-joint on steering rack | **: 6 ± 0.6** |
| **(10)** Fixing steering on subframe | **: 8 ± 0.8** |
| **(11)** Hydraulic pipe connection | **: 2.4 ± 0.2** |
| **(12)** Power steering valve | **: 1.2 ± 0.2** |
| **(13)** Plunger flange screws | **: 1.2 ± 0.2** |
| **(14)** Steering ram screw on housing | **: 9 ± 1** |
| **(15)** Steering ram screw on yoke | **: 9 ± 1** |

**NOTE:** When removing the steering, it is imperative to replace screws **(14)** and **(15)** *(new screws)*.

| | Steering rack travel | Rack pinion | Number of teeth in rack | Number of steering wheel turns | Turning circle between walls | Turning circle between kerbs |
|---|---|---|---|---|---|---|
| **Left hand drive** | **71,7 x 2** | LH helix | **28 Teeth** | **3,22** | **12 m** | **11,48 m** |
| **Right hand drive** | | RH helix | | | | |

| Engines | Steering valve |
|---|---|
| **NFV - 6FZ - RFN - RHY** | number of teeth **: 7** |

Length of the steering link rods *(pre-adjustment)*:

- Between ball-joint centres = **392 mm**.
- Between the centre of the pivot ball-joint and the contact face of the steering rack ball-joint = **412 mm**.

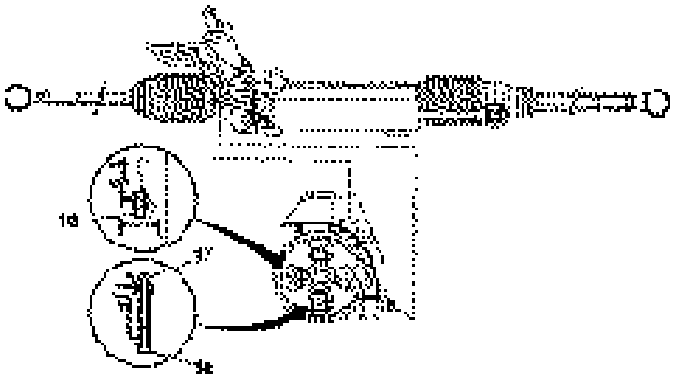

Capacity of power steering circuit = **1 Litre**.
Oil quality = **TOTAL FLUIDE ATX**.
Power steering pump: Supplier **SAGINAW**.
Pump adjustment = **100 ± 5 Bars**.
Pump shaft threading **3/8 - 16 threads per inch**.

B3EP118D

**Tightening torques (m.daN).**

| | |
|---|---|
| Unions between pump unions and power steering valve | **: 2 ± 0.3** |
| **(16)** Fixing screw | **: 2.2 ± 0.3** |
| **(17)** Fixing screw | **: 2.2 ± 0.3** |
| **(18)** Fixing screw | **: 2.2 ± 0.3** |

**NOTE:** Coat the threads with product «**E3**».

A pressure switch is implanted in the hydraulic piping between the high pressure pump and the power steering valve.
- Opening pressure = **30 / 35 Bars**.
- Closing pressure = **25 Bars minimum**.

Tightening torque = **2 ± 0.2**.

| BRAKE SPECIFICATIONS (WITHOUT ABS) | | | | | C2 |
|---|---|---|---|---|---|
| | | | 1.1i | 1.4i | 1.4 HDi |
| Engine type | | | HFX | KFV | 8HX |
| FT | Ø mm | Master cylinder | 20,6 | | |
| | | Master vac | 203,2 | | |
| | | Caliper/piston makes | LUCAS.TRW-/-C 48/13-/-48 | | |
| | | Disc / Plain | 266 | | |
| | Disc thickness/minimum thickness | | 13/11 | | |
| | Maximum run-out (mm) | | 0,05 | | |
| | Difference in max. thickness on same circumference (mm) | | 0,01 | | |
| | Supplier / Brake pad grade | | TEXTRR-/-T 4144 | | |
| | Original thickness/minimum thickness | | 13/3 | | |
| RR | Ø mm | Original drum/maximum | 203/205 | | |
| | | Width | 38 | | |
| | Supplier / grade | | DON-/-8259/1 | | |

| C2 | | | | BRAKE SPECIFICATIONS (WITH ABS) | | | |
|---|---|---|---|---|---|---|---|
| | | | | 1.1i | 1.4i | 1.6i 16V | 1.4 HDi |
| Engine type | | | | HFX | KFV | NFU | 8HX |
| FT | Ø mm | Master cylinder | | 22,2 (*) | | | |
| | | Master vac | | 228,6 | | | |
| | | Caliper/piston makes | | LUCAS.TRW-/-C 48/13-/-48 | | LUCAS.TRW C 54/22-/-54 | LUCAS.TRW-/-C 48/13-/-48 |
| | | Disc | Plain | 266 | | | |
| | | | Ventilated | | | 266 | |
| | Disc thickness/minimum thickness | | | 13/11 | | 22/20 | 13/11 |
| | Supplier / Brake pad grade | | | TEXTRR-/-T 4144 | | | |
| RR | Ø mm | Disc | Plain | | | 247 | |
| | Disc thickness/minimum thickness | | | | | 9/7 | |
| | Supplier / Brake pad grade | | | | | LUCAS.TRW C 38 HR 9/13 | |
| | Ø mm | Original drum/ maximum/Width | | 203/205-/-38 | | | 203/205-/-38 |
| | Supplier / Lining grade | | | DON 8259/1 | | GALFER G 4554 | DON 8259/1 |

**(*)** = With emergency braking assistance (AFU).

# BRAKE SPECIFICATIONS

C2

## Braking circuit without ABS - REF (drum brakes at the rear)

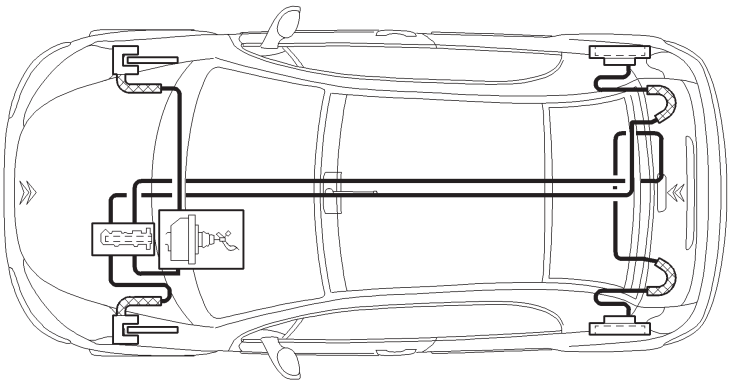

B3FP7BSD

## Braking system specifications

- Braking circuit at «**X**».
- Front brakes with ventilated discs **(*)**.
- Rear brakes with eitther drums or discs **(*)**.
- Handbrake lever controlling cables acting on the rear wheels.
- The compensator and main brake limiter functions are assured by the **ABS EBD system**.

**NOTE: REF** = Electronic Brakeforce Distribution.

**(*)** = according to version.

| C2 | BRAKE SPECIFICATIONS |
|---|---|

**Braking circuit with ABS - REF (drum brakes at the rear)**

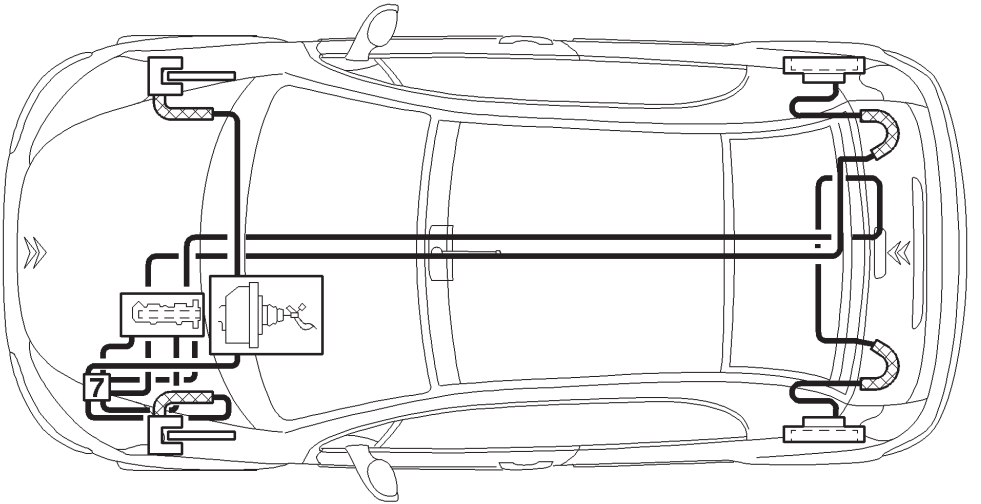


B3FP7BTD

# BRAKE SPECIFICATIONS

C2

## Braking circuit with ABS - REF (disc brakes at the rear)

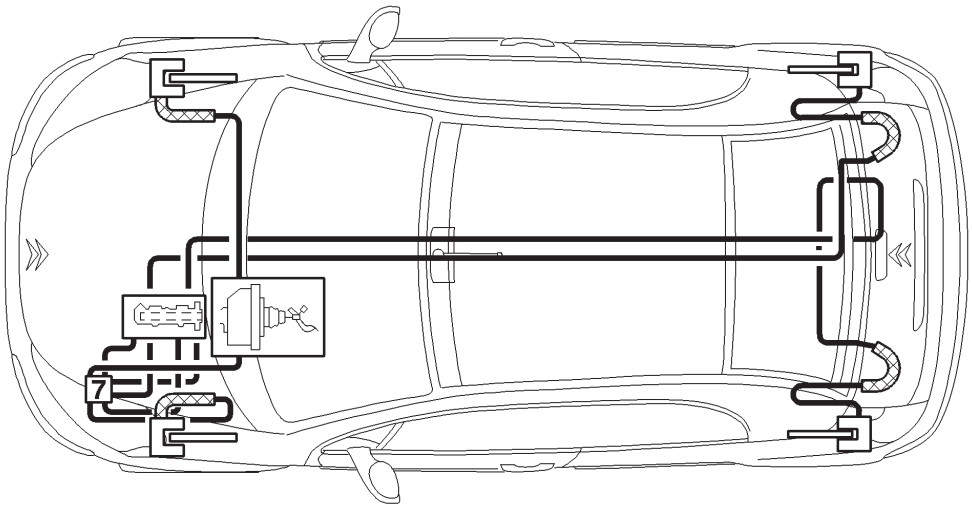


B3FP7BUD

| C2 | BRAKE SPECIFICATIONS |
|---|---|

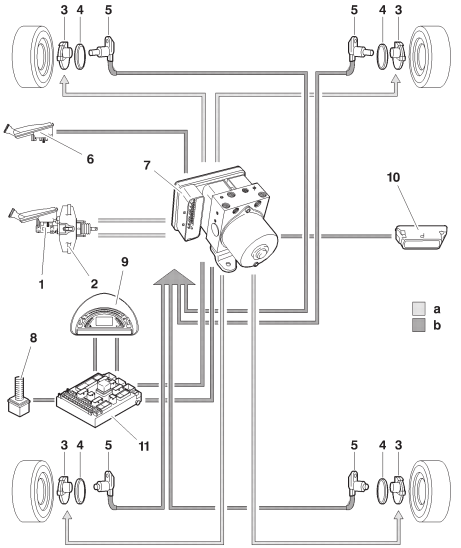


**Braking circuit with ABS - REF**

**(a)** Hydraulic circuit
**(b)** Electrical circuit

**(1)** Master cylinder in tandem
**(2)** Braking servo
**(3)** Brake caliper *(or drum at the rear)*
**(4)** Hub equipped with a bearing with an integral magnetic wheel *(48 pairs of poles)*
**(5)** Wheel sensor
**(6)** Brake fluid level sensor
**(7)** Hydraulic block plus ECU
**(8)** Stoplamp switch
**(9)** Instrument panel
**(10)** Diagnostic socket
**(11)** Built-in systems interface ***(BSI)***

B3GP02RP

| BRAKE SPECIFICATIONS | | | | | C2 |
|---|---|---|---|---|---|
| **(7) Hydraulic block** | Ref. | Components | Supplier | Part no. | Observations |
| 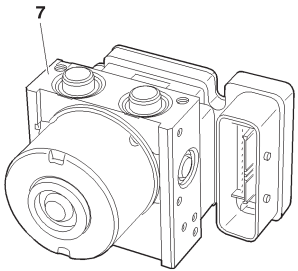  B3FP7BVC | 7 | Hydraulic block | TEVES | ABS MK 70<br>96 514 120 80 | Mounted on the front LH chassis member.<br>4 adjustment channels. |
| | | | | ESP -ABS MK.60<br>96 490 288 80 | |
| | | ECU | | ABS MK.70 | 26-way connector.<br>Integral to the hydraulic block. |
| | | | | ESP -ABS<br>MK 60 | |
| | 5 | Front wheel sensor | | 96 387 201 80 | 2-way blue connector.<br>The sensors are inductive-type.<br>Mounted on the pivot<br>Non-adjustable airgap: **0.16 to 1.6 mm**.<br>Tightening torque: **0.8 ± 0.2 m.daN**. |
| | | Rear wheel sensor | | | 2-way blue connector.<br>The sensors are inductive-type<br>Mounted on the suspension arm.<br>Non-adjustable airgap**: 0,35 à 1,6 mm**.<br>Tightening torque: **0,8 ± 0,2 m.daN.** |
| | 4 | Hub bearing | SNR | | Hub equipped with a bearing with an integral magnetic wheel *(48 pairs of poles)*. |

| C2 | BRAKE SPECIFICATIONS | |
|---|---|---|
| **Brake pedal** | **Front brakes** | **Rear brakes** |
| 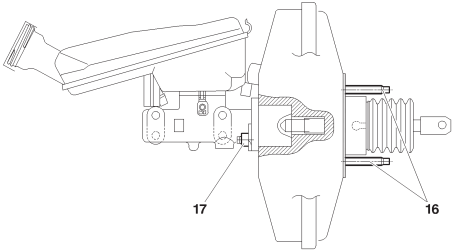  B3FP166D | 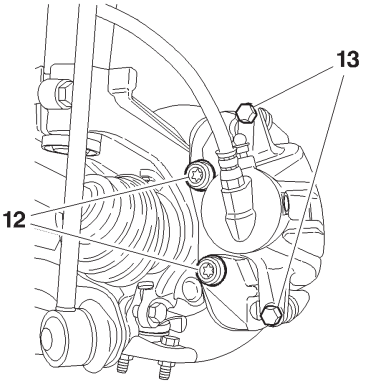  B3FP164C | 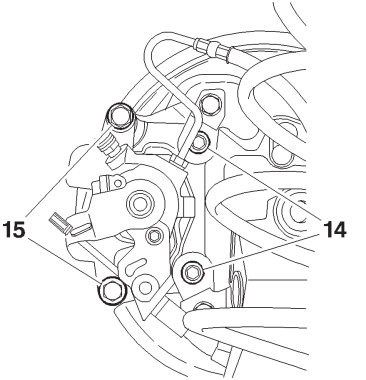  B3FP165C |
| **Tightening torques (m.daN).** | | |
| **(16)** Servo fixing **: 2,2 ± 0,3**<br>**(17)** Fixing on master cylinder **: 2 ± 0,5** | **(12)** Yoke fixing on caliper **: 10,5 ± 1**<br>**(13)** Yoke fixing on caliper **: 3 ± 0,3** | **(14)** Rear caliper fixing on arm **: 5,3 ± 0,5**<br>**(15)** Yoke fixing on caliper **: 3,8 ± 0,3** |

# HANDBRAKE (Adjustment) C2

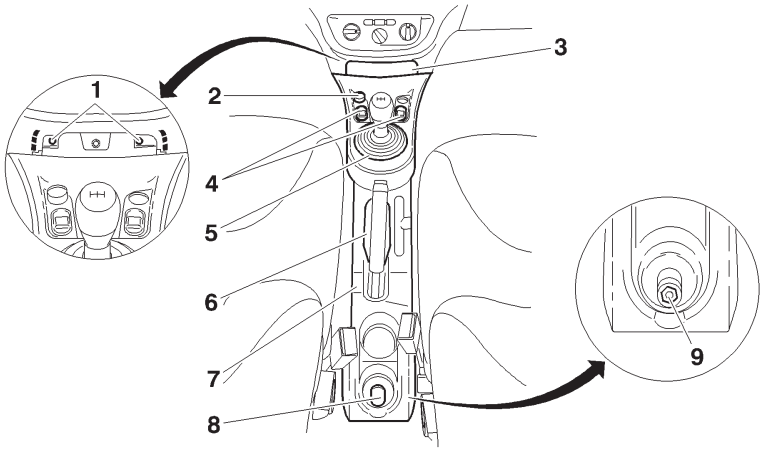


C5FP0ELD

**Adjustment.**

Lift and chock the vehicle.

Remove:
- The rear cover **(8)**.
- The nut **(9)**.
- The handbrake trim **(6)**.
- The gear lever gaiter **(5)**.
- The front cover **(3)**.
- The screws **(1)**.

Disconnect the connectors of the following components:
- The cigar lighter **(2)**.
- The electric window buttons **(4)**.

Remove the central console **(7)**.

**WARNING:** Check that the brake cables are correctly routed under the vehicle.

Slacken the handbrake lever.
Press gently on the brake pedal *(Then repeat the operation **3 times**)*.
Pull vigorously on the handbrake lever **4 or 5 times**.

| C2 | HANDBRAKE (Adjustment) |
|---|---|

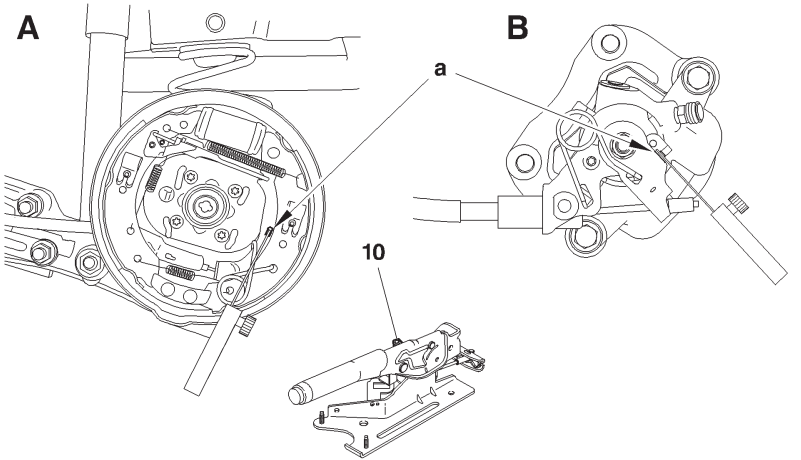


B3FP16ED

**Adjustment (continued).**

**A**: Drum brakes.
**B**: Disc brakes.
**(10)** Nut for adjusting cable tensions.
Remove:
- The rear wheels.
- The drums *(according to version)*.

Release the handbrake.
Use a gauge set to measure at **«a»** the travel of the lever from its stop.
Adjust the nut **(10)** to obtain a travel of less than or equal to **1 mm** at **«a»**.
Refit the brake drums without tightening them *(according to version)*.
Action the handbrake lever **8 times** with an effort of **40 m.daN**.
With the handbrake released, check the travel of the lever at **«a»**, using a gauge set.
**NOTE:** The travel should be less than **1 mm** and more than **0,05 mm**.
Refit:
- The brake drums.
- The wheels.
- The central console.

Check the operation of the handbrake.

# BLEEDING AND FILLING THE BRAKING SYSTEM

C2

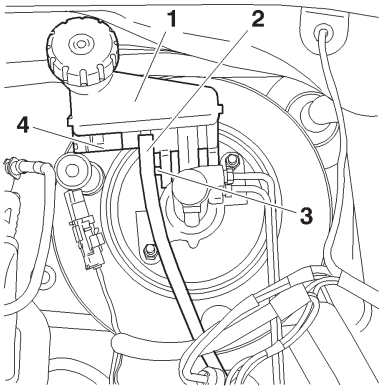


B3FP15XC

**Tools.**

**[1]** Generic bleeding apparatus : **«LURO»** or similar.

**Bleeding, refilling.**

**Draining.**

Drain the brake fluid reservoir **(1)** to the maximum *(if necessary, use a clean syringe)*.
Disconnect the connector **(4)**.
Uncouple the pipe **(2)**.
Unscrew the shaft **(3)**.
Remove the reservoir **(1)**.
Empty the brake fluid reservoir **(1)**.
Clean the brake fluid reservoir **(1)**.
Refit:
- The brake fluid reservoir **(1)**.
- The shaft **(3)**.

Couple the pipe **(2)**.
Reconnect the connector **(4)**.

**Filling the braking system.**

**WARNING:** Use only those hydraulic fluids that are approved and recommended.
- Fill the brake fluid reservoir **(1)**.

**Bleeding the braking system.**

**WARNING:** During the bleeding operation, take care to maintain the level of brake fluid in the reservoir and to top it up, using only brake fluid that is clean and clear.

| C2 | BLEEDING AND FILLING THE BRAKING SYSTEM (Continued) |
|---|---|

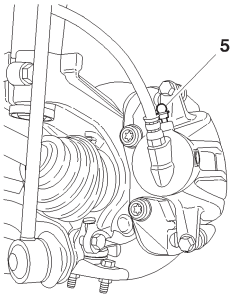


B3FP15YC

**Bleeding the primary braking circuit.**

**WARNING:** The ABS should not be active during the bleeding operation.

Front brake caliper, Bleed screw **(5)**.
**A**: Rear brake caliper
**B**: Rear brake drum

Bleed screw **(6)**.

Bleed each wheel cylinder, proceeding in the following order:

**Front LH wheel.**
**Front RH wheel.**
**Rear LH wheel.**
**Rear RH wheel.**

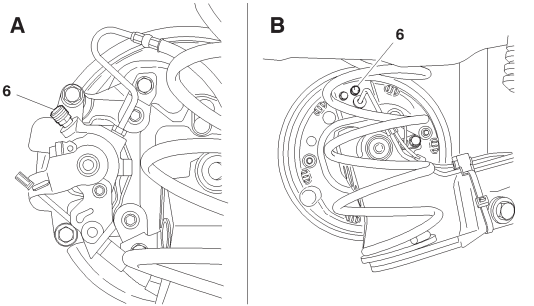


B3FP15ZD

## BLEEDING AND FILLING THE BRAKING SYSTEM (Continued) C2

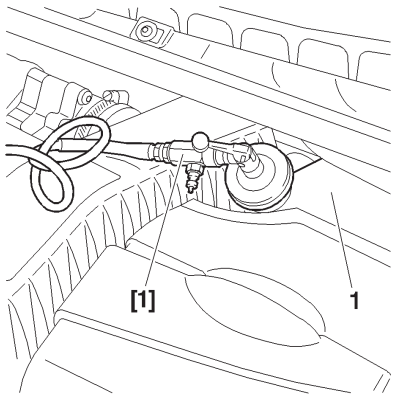


B3FP160C

**With the bleeding apparatus.**

- Connect the bleeding apparatus **[1]** on the brake fluid reservoir **(1)**.
- Adjust the apparatus pressure to **2 Bars**.

**For each circuit:**

- Connect a transparent tube onto the bleed screw, submerge the other end of the tube in a clean container.
- Open the bleed screw, wait until the fluid is flowing out without air bubbles.
- Close the bleed screw.
- Remove the bleeding apparatus **[1]**.
- Check the brake fluid level *(should be between «**MINI**» level and «**MAXI**» level)*.
- Fill if necessary with the approved and recommended synthetic brake fluid.

**Without the bleeding apparatus.**

**NOTE:** Two operators are necessary.

**For each circuit:**

- Apply the brake pedal to place the circuit under pressure.
- Connect a transparent tube onto the bleed screw, submerge the other end of the tube in a clean container.
- Open the bleed screw, wait until the fluid is flowing out without air bubbles.
- Close the bleed screw.
- Remove the tool **[1]**.

**NOTE:** Recommence the process a second time if that is necessary.

- Check the brake fluid level *(should be between «**MINI**» level and «**MAXI**» level)*.
- Fill if necessary with the approved and recommended synthetic brake fluid.

| C3 | | | | BRAKE SPECIFICATIONS (WHITHOUT ABS REF) | | | | |
|---|---|---|---|---|---|---|---|---|
| | | | | 1.1i | 1.4i | 1.4i 16V | 1.4 HDi | |
| Engine type | | | | HFX | KFV | KFU | 8HX | 8HW |
| FT | Ø mm | Master cylinder | | 20,6 | | | | |
| | | Master vac | | 203,2 | | | | |
| | | Caliper/piston makes | | LUCAS/TRW C48/13 48 | | | | |
| | | Disc | Plain | 266 | | | 266 | |
| | Disc thickness/minimum thickness | | | 13/11 | | | 13/11 | |
| | Ø mm | Disc | Ventilated | | | 266 | | |
| | Disc thickness/minimum thickness | | | 22/20 | | | | |
| | Brake pad grade | | | TEXTRR T 4144 | | | | |
| RR | Ø mm | Drum / Max. thickness Width | | 203/205/38 | | | | |
| | Make | | | DON | | | | |
| | Brake lining grade | | | 8259 | | | | |

**Braking compensator** ***(Vehicle without ABS) - (CICR*** *= Compensator integral to the wheel cylinder).* - **REF** = Electronic brakeforce distribution.

Supplier/Type/Cut-off pressure (Bar) → **RPO 9666 LUCAS** **LUCAS/CICR/35**

Supplier/Type/Cut-off pressure (Bar) **RPO 9667 LUCAS** → **LUCAS/CICR/27**

| BRAKE SPECIFICATIONS (WITH ABS REF) | | | | | | | | | | C3 |
|---|---|---|---|---|---|---|---|---|---|---|
| | | | | 1.1i | 1.4i | 1.4i 16V | 1.6i 16V | 1.4 HDi | | 1.4 HDi 16V | |
| Engine type | | | | HFX | KFV | KFU | NFU | 8HX | 8HW | 8HV | 8HY |
| FT | Ø mm | Master cylinder | | 22,2 (*) | | | | | | | |
| | | Master vac | | 228,6 | | | | | | | |
| | | Caliper /piston makes | | LUCAS/TRW C 48/13 48 | | LUCAS/TRW C 54/22 54 | | LUCAS/TRW C 48/13 48 | | LUCAS/TRW C 54/22 54 | |
| | | Disc | Plain | 266 | | | | 266 | | | |
| | Disc thickness/minimum thickness | | | 13/11 | | | | 13/11 | | | |
| | Ø mm | Disc | Ventilated | | | 266 | | | | 266 | |
| | Disc thickness/minimum thickness | | | | | 22/20 | | | | 22/20 | |
| | Brake pad grade | | | TEXTRR T 4144 | | | | | | | |
| RR | Ø mm | Cylinder or caliper | | LUCAS C38 HR 9/13 | | | | | | | |
| | | Disc | Plain | | | | 247 | | | 247 | |
| | Disc thickness/minimum thickness | | | | | | 9/7 | | | 9/7 | |
| | Ø mm | Drum / Max. thickness / Width | | 203/205/38 | | | | 203/205/38 | | | |
| | Make | | | DON | | | GALFER | DON | | GALFER | |
| | Brake lining grade | | | 8259 | | | G 4554 | 8259 | | G 4554 | |

**(*)** = With emergency braking system. **REF** = Electronic brakeforce distribution.
**NOTE:** Braking compensators = **The compensator and limiter functions for the main brakes are assured by the ABS REF system.**

| C3 PLURIEL | | | | BRAKE SPECIFICATIONS (WITH & WITHOUT ABS REF) | | | | |
|---|---|---|---|---|---|---|---|---|
| | | | | Sans ABS REF | | Ftec ABS REF | | |
| | | | | 1.4i | 1.4 HDi | 1.4i | 1.6i 16V | 1.4 HDi |
| Engine type | | | | KFV | 8HX | KFV | NFU | 8HX |
| FT | Ø mm | Master cylinder | | 20,6 | | 22,2 (*) | | |
| | | Master vac | | 203,2 | | 228,6 | | |
| | | Makes /piston makes | | LUCAS/TRW C38 HR 9/13 | | | | |
| | | Disc | Ventilated | 266 | | | | |
| | Disc thickness/minimum thickness | | | 22/20 | | | | |
| | Brake pad grade | | | TEXTRR T 4144 | | | | |
| RR | Ø mm | Cylinder or caliper | | LUCAS/TRW C 38/13 38 | | | | |
| | | Disc | Plain | | | | 247 | |
| | Disc thickness/minimum thickness | | | | | | 9/7 | |
| | Ø mm | Drum / Max. thickness / Width | | 203/205/38 | | | | 203/205/38 |
| | Make | | | DON | | | GALFER | DON |
| | Brake lining grade | | | 8259/1 | | | G 4554 | 8259/1 |

**(*)** = With emergency braking system.
**Braking compensator *(Vehicle without ABS)*** *(**CICR** = Compensator integral to the wheel cylinder)*
Supplier/Type/Cut-off pressure (Bar) **REF** = Electronic brakeforce distribution.
**Braking compensator *(Vehicle with ABS)*** : **LUCAS/CICR/27**
**NOTE:** Braking compensators = **The compensator and limiter functions for the main brakes are assured by the ABS REF system.**

# BRAKE SPECIFICATIONS

## C3 - C3 PLURIEL

### Braking circuit without ABS - REF (drum brakes at the rear)

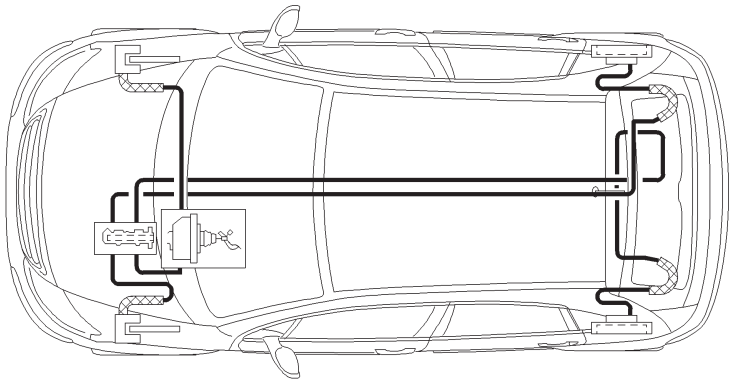

B3FP161D

### Braking system specifications

- Braking circuit at «**X**».

- Front brakes with ventilated discs **(*)**.

- Rear brakes with eitther drums or discs **(*)**.

- Handbrake lever controlling cables acting on the rear wheels.

The compensator and main brake limiter functions are assured by the **ABS EBD system**.

**NOTE: REF** = Electronic Brakeforce Distribution.

**(*)** = according to version.

| C3 - C3 PLURIEL | BRAKE SPECIFICATIONS |
|---|---|

**Braking circuit with ABS - REF (drum brakes at the rear)**

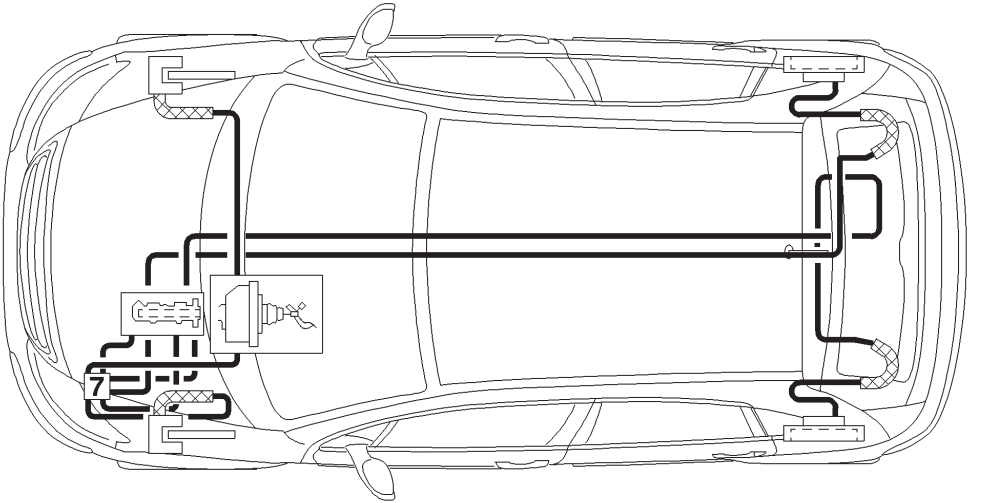


B3FP162D

| BRAKE SPECIFICATIONS | C3 - C3 PLURIEL |
|---|---|

**Braking circuit with ABS - REF (disc brakes at the rear)**

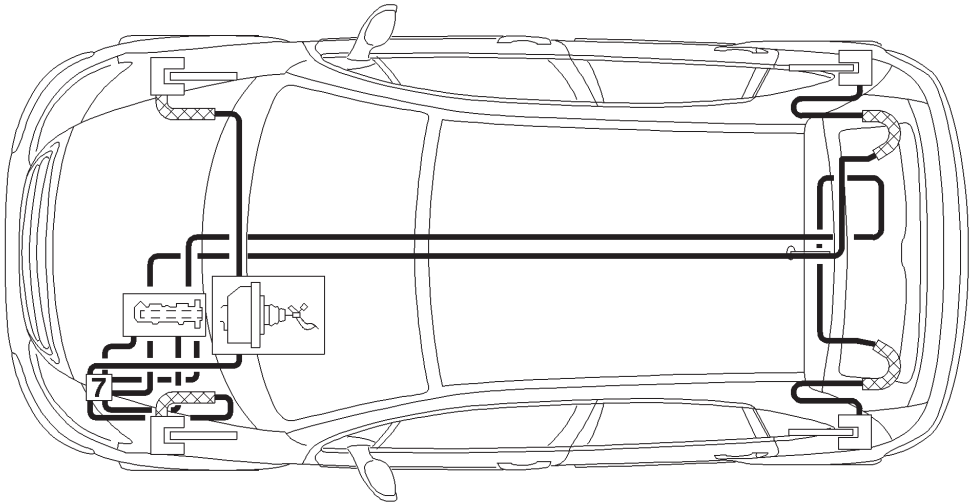


B3FP163D

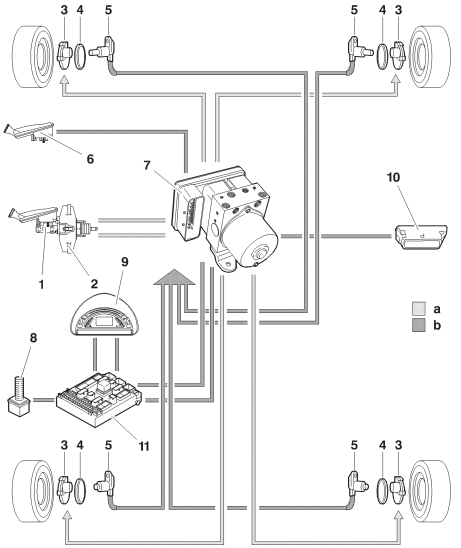


B3GP02RP

## Braking circuit with ABS - REF

**(a)** Hydraulic circuit
**(b)** Electrical circuit

**(1)** Master cylinder in tandem
**(2)** Braking servo
**(3)** Brake caliper *(or drum at the rear)*
**(4)** Hub equipped with a bearing with an integral magnetic wheel *(**48** pairs of poles)*
**(5)** Wheel sensor
**(6)** Brake fluid level sensor
**(7)** Hydraulic block plus ECU
**(8)** Stoplamp switch
**(9)** Instrument panel
**(10)** Diagnostic socket
**(11)** Built-in systems interface ***(BSI)***

# BRAKE SPECIFICATIONS — C3 - C3 PLURIEL

## C3

**ABS hydraulic block: ➔ N°RPO 9423**

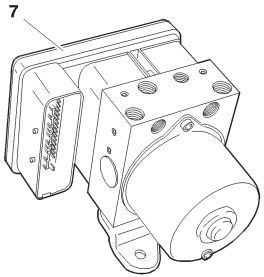


B3FP12XC

| Components | Supplier | Part no. | Observations |
|---|---|---|---|
| **ABS hydraulic block** | TEVES | ABS MK 60 : 96 394 937 80<br>ESP - ABS MK 60 : 96 418 772 80 | Installed on the front LH chassis member: **4** adjustment channels |

## C3 Pluriel

**ABS hydraulic block: N°RPO 9424 ➔**

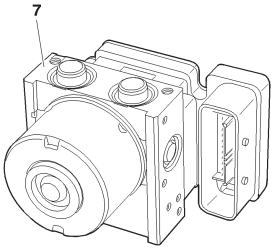


B3FP7BVC

| Components | Supplier | Part no. | Observations |
|---|---|---|---|
| **ABS hydraulic block** | TEVES | ABS MK 70 : 96 419 653 80<br>ESP - ABS MK 60 : 96 418 772 80 | Installed on the front LH chassis member: **4** adjustment channels |

**NOTA :** ESP = Electronic Stability Program

| C3 - C3 PLURIEL | BRAKE SPECIFICATIONS | |
|---|---|---|
| **Brake pedal gear** | **Front brakes** | **Rear brakes** |
| 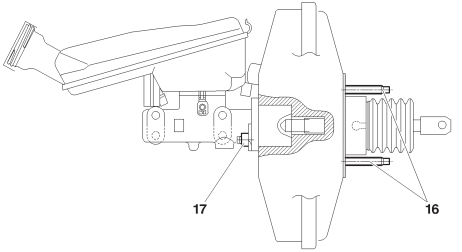  B3FP166D | 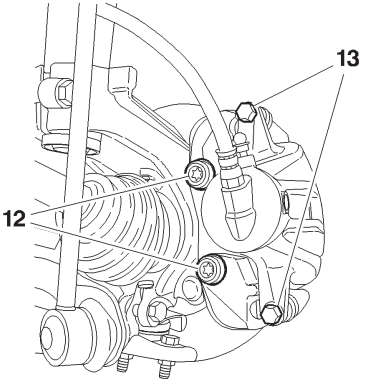  B3FP164C | 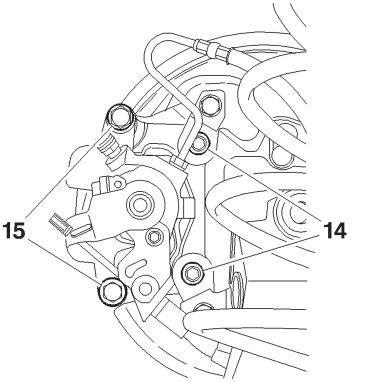  B3FP165C |
| **Tightening torques (m.daN).** | | |
| **(16)** Servo fixing **: 2,2 ± 0,3**<br>**(17)** Fixing on master cylinder **: 2 ± 0,5** | **(12)** Yoke fixing on caliper **: 10,5 ± 1**<br>**(13)** Yoke fixing on caliper **: 3 ± 0,3** | **(14)** Rear caliper fixing on arm **: 5,3 ± 0,5**<br>**(15)** Yoke fixing on caliper **: 2,7 ± 0,5** |

## Evolution: rear wheel cylinder (applies from RPO 9667)

### C3 - C3 Pluriel

**Evolution.**
New wheel cylinders at the rear, with cut-off pressure 27 bars instead of 35 bars.

**Assembly.**
**(1)** Rear wheel cylinder.

**Repair.**

**IMPERATIVE: The mixing of the old and new components is STRICTLY FORBIDDEN.**

**WARNING:** Identify the type of assembly prior to starting a repair.

**ESSENTIAL: Systematically replace the wheel cylinders on both sides on the same axle.**

**Replacement parts.**
Replacement Parts will market only the components for the new assembly.

## C3 - C3 PLURIEL | HANDBRAKE (Adjustment)

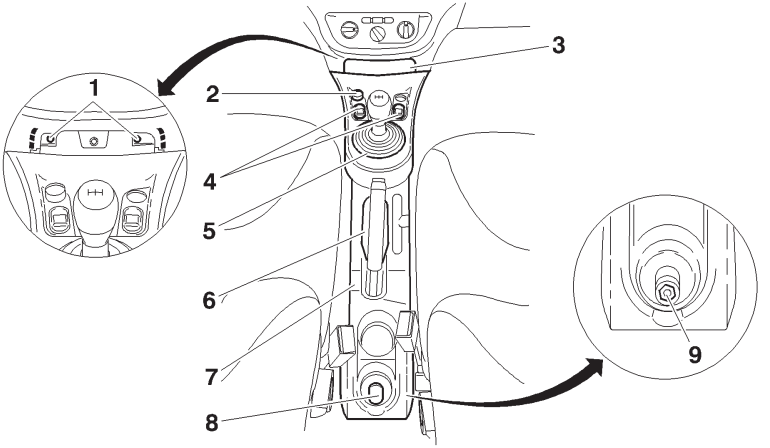


C5FP0ELD

**Adjustment.**

Lift and chock the vehicle.

Remove:
- The rear cover **(8)**.
- The nut **(9)**.
- The handbrake trim **(6)**.
- The gear lever gaiter **(5)**.
- The front cover **(3)**.
- The screws **(1)**.

Disconnect the connectors of the following components:
- The cigar lighter **(2)**.
- The electric window buttons **(4)**.

Remove the central console **(7)**.

**WARNING:** Check that the brake cables are correctly routed under the vehicle.

Slacken the handbrake lever.
Press gently on the brake pedal *(Then repeat the operation **3 times**)*.
Pull vigorously on the handbrake lever **4 or 5 times**.

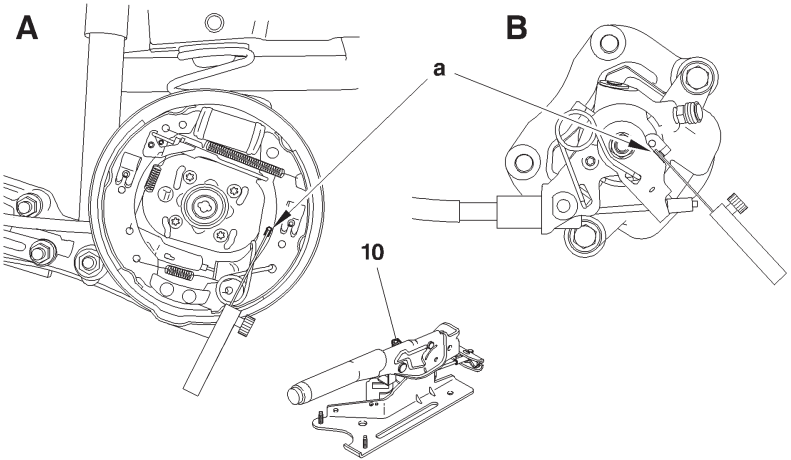


B3FP16ED

**Adjustment (continued).**

**(10)** Nut for adjusting cable tensions
Remove:
- The rear wheels.
- The drums *(according to version)*.

Release the handbrake.
Use a gauge set to measure at **«a»** the travel of the lever from its stop.
Adjust the nut **(10)** to obtain a travel of less than or equal to **1 mm** at **«a»**.
Refit the brake drums without tightening them *(according to version)*.
Action the handbrake lever 8 times with an effort of **40 m.daN**.
With the handbrake released, check the travel of the lever at **«a»**, using a gauge set.
**NOTE:** The travel should be less than **1 mm** and more than **0,05 mm**.
Refit:
- The brake drums.
- The wheels.
- The central console.

Check the operation of the handbrake.

# BLEEDING AND FILLING THE BRAKING SYSTEM

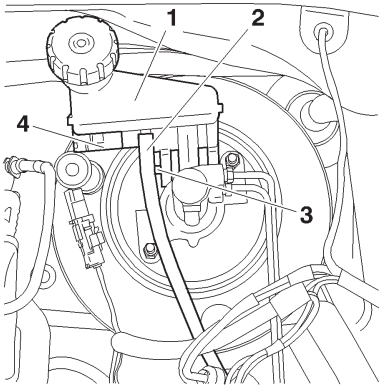


B3FP15XC

**Tools.**

**[1]** Generic bleeding apparatus **: «LURO» or similar**.

**Bleeding, refilling.**

**Draining.**

Drain the brake fluid reservoir **(1)** to the maximum *(if necessary, use a clean syringe)*.
Disconnect the connector **(4)**.
Uncouple the pipe **(2)**.
Unscrew the shaft **(3)**.
Remove the reservoir **(1)**.
- Empty the brake fluid reservoir **(1)**.
- Clean the brake fluid reservoir **(1)**.

Refit:
- The brake fluid reservoir **(1)**.
- The shaft **(3)**.

Couple the pipe **(2)**.
Reconnect the connector **(4)**.

**Filling the braking system.**

**WARNING:** Use only those hydraulic fluids that are approved and recommended.
- Fill the brake fluid reservoir **(1)**.

**Bleeding the braking system.**

**WARNING:** During the bleeding operation, take care to maintain the level of brake fluid in the reservoir and to top it up, using only brake fluid that is clean and clear.

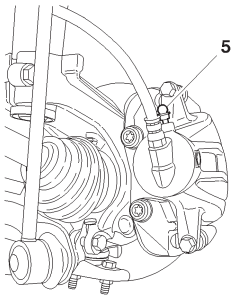


B3FP15YC

**Bleeding the primary braking circuit.**

**WARNING:** The ABS should not be active during the bleeding operation.

Front brake caliper, Bleed screw **(5)**.
**A**: Rear brake caliper
**B**: Rear brake drum

Bleed screw **(6)**.

Bleed each wheel cylinder, proceeding in the following order:

**Front LH wheel.**
**Front RH wheel.**
**Rear LH wheel.**
**Rear RH wheel**

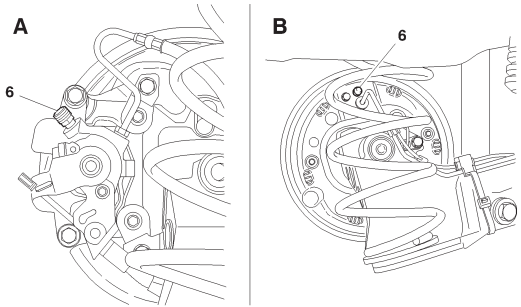


B3FP15ZD

| C3 - C3 PLURIEL | BLEEDING AND FILLING THE BRAKING SYSTEM (Continued) |
|---|---|

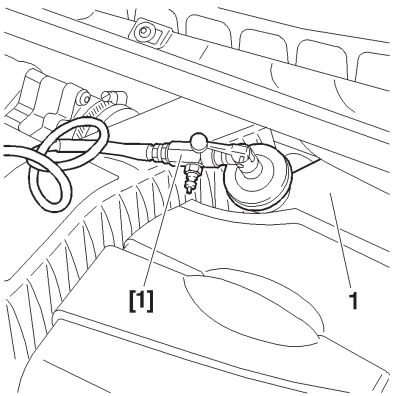


B3FP160C

**With the bleeding apparatus.**

- Connect the bleeding apparatus **[1]** on the brake fluid reservoir **(1)**.
- Adjust the apparatus pressure to **2 Bars**.

**For each circuit:**

- Connect a transparent tube onto the bleed screw, submerge the other end of the tube in a clean container.
- Open the bleed screw, wait until the fluid is flowing out without air bubbles.
- Close the bleed screw.
- Remove the bleeding apparatus **[1]**.
- Check the brake fluid level *(should be between «**MINI**» level and «**MAXI**» level)*.
- Fill if necessary with the approved and recommended synthetic brake fluid.

**Without the bleeding apparatus.**

**NOTE:** Two operators are necessary.

**For each circuit:**

- Apply the brake pedal to place the circuit under pressure.
- Connect a transparent tube onto the bleed screw, submerge the other end of the tube in a clean container.
- Open the bleed screw, wait until the fluid is flowing out without air bubbles.
- Close the bleed screw.
- Remove the tool **[1]**.

**NOTE:** Recommence the process a second time if that is necessary.

- Check the brake fluid level *(should be between «**MINI**» level and «**MAXI**» level)*.
- Fill if necessary with the approved and recommended synthetic brake fluid.

| BRAKE SPECIFICATIONS | | | | | | | | | | XSARA |
|---|---|---|---|---|---|---|---|---|---|---|
| | | | Saloons | | | | | | | |
| | | | 1.4i | 1.6i 16V | 2.0i 16V | | 1.9 D | 1.4 HDi | 2.0 HDi | |
| Engine type | | | KFW | NFU | RFN | RFS | WJY | 8HZ | RHY | RHZ |
| FT | Ø mm | Master cylinder | Without ABS 23,8 *(expansion holes)* | | | | Ftec ABS 23,8 *(valve)* | | | |
| | | Master vac | 228,6 | | | | | | | |
| | | Caliper/piston makes | BOSCH 54 | | LUCAS 57 | | BOSCH 54 | | | |
| | | Disc — Ventilated | 266 | | 283 | | 266 | | | |
| | Disc thickness/min. thickness | | 22 /20 | | | | | | | |
| | Brake pad grade | | FERF 769 | | ASFM 380 | | FERF 769 | | | |
| | Thickness/min. thickness | | 13 / 2 | | | | | | | |
| RR | Ø mm | Drum - Ø min./max. | 203/205 | | | | 203/205 | | | |
| | | Disc non-ventilated | | 247 | | | | 247 | | |
| | Disc thickness/min. thickness | | | 8/6 | | | | 8/6 | | |
| | Make | | BENDIX | JURID | | TEXTRR | BENDIX | JURID | | |
| | Brake lining grade | | D 8259 | 519 | | 428 | D 8259 | E 558 | 519 | |
| | Make/Type | | BOSCH/Load-sensitive compensator | | | | | | | |
| | Cut-off pressure in Bars | | 32 | | | | | | | |
| | Ramp/Paint reference | | 0,3 - White | | | | | | | |

| XSARA | | | BRAKE SPECIFICATIONS | | | | | | |
|---|---|---|---|---|---|---|---|---|---|
| | | | Estates | | | | | | |
| | | | 1.4i | 1.6i 16V | 2.0i 16V | 1.9 D | 1.4 HDi | 2.0 HDi | |
| Engine type | | | KFW | NFU | RFN | WJY | 8HZ | RHY | RHZ |
| FT | Ø mm | Master cylinder | Without ABS 23,8 *(expansion holes)* | | | | | Ftec ABS 23,8 *(valve)* | |
| | | Master vac | 228,6 | | | | | | |
| | | Caliper/piston makes | BOSCH 54 | | LUCAS 57 | | BOSCH 54 | | |
| | | Disc Ventilated | 266 | | 283 | | 266 | | |
| | Disc thickness/min. thickness | | 22 / 20 | | | | | | |
| | Brake pad grade | | FERF 769 | | ASFM 380 | | FERF 769 | | |
| | thickness/min. thickness | | 13 / 2 | | | | | | |
| RR | Ø mm | Drum - Ø min./max. | 228 / 230 | | | 228 / 230 | | | |
| | | Disc non-ventilated | | 247 | | | 247 | | |
| | Disc thickness/min. thickness | | | 8 / 6 | | | 8 / 6 | | |
| | Make | | JURID | | | | | | |
| | Brake lining grade | | E 558 | 519 | | E 558 | | 519 | |
| | Make/Type | | BOSCH/Load-sensitive compensator | | | | | | |
| | Cut-off pressure in Bars | | 32 | | | | | | |
| | Ramp/Paint reference | | 0,3 - White | | | | | | |

# BRAKE SPECIFICATIONS

## XSARA

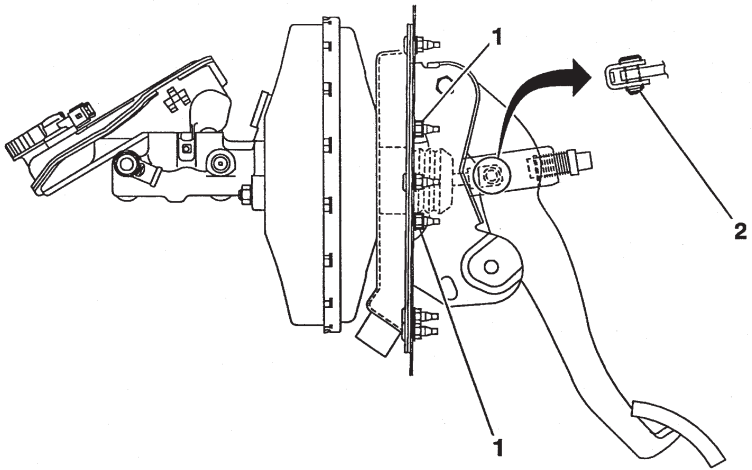


B3FP10YD

- Tighten the nuts **(1)** to **2.3 m.daN**.

- The clevis pin **(2)** is held in place by a plastic clip.

| XSARA | BRAKE SPECIFICATIONS |
|---|---|

1

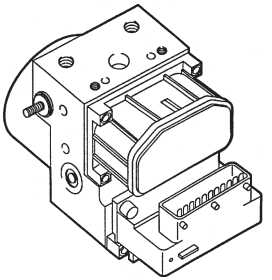

2

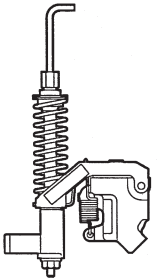

**Braking system specifications**

- **"X"** braking circuit.

- Front: disc brakes, ventilated *(according to model)*.

- Rear: drum brakes with automatic adjustment.

- Cable operated handbrake acting on the rear wheels.

**(1)** Hydraulic valve block **«ABS Bosch 5.3»** or
**(1)** Hydraulic valve block **«ABS Bosch 5.3 REF»** or
**(1)** Hydraulic valve block **«ABS with ESP Bosch 5.7»**.

**(2)** Load sensitive braking compensator *(according to model)*.

| B3FP09HC | B3FP09JC |
|---|---|

# BRAKE SPECIFICATIONS — XSARA

| Braking system without ABS *(rear drum brakes)* Up to → OPR 8687 | Braking system without ABS *(rear disc brakes)* |
|---|---|
| 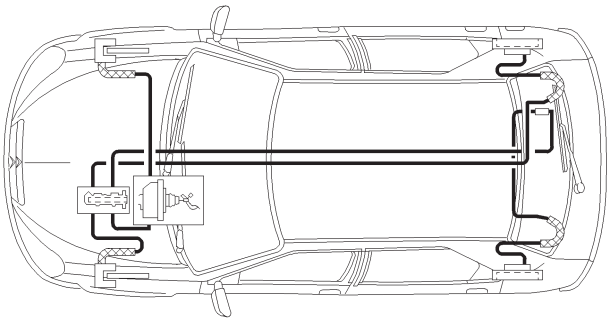 B3FP14FD | 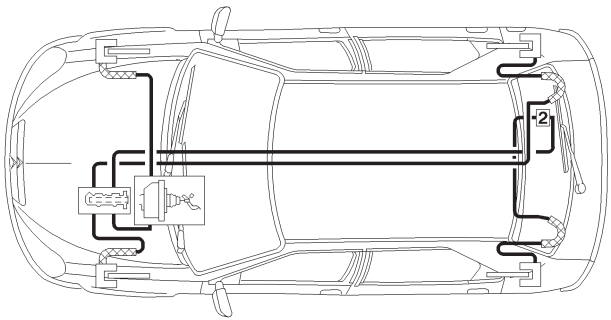  B3FP14GD |

| XSARA | BRAKE SPECIFICATIONS |
|---|---|

**Braking system with ABS *(rear drum brakes)***

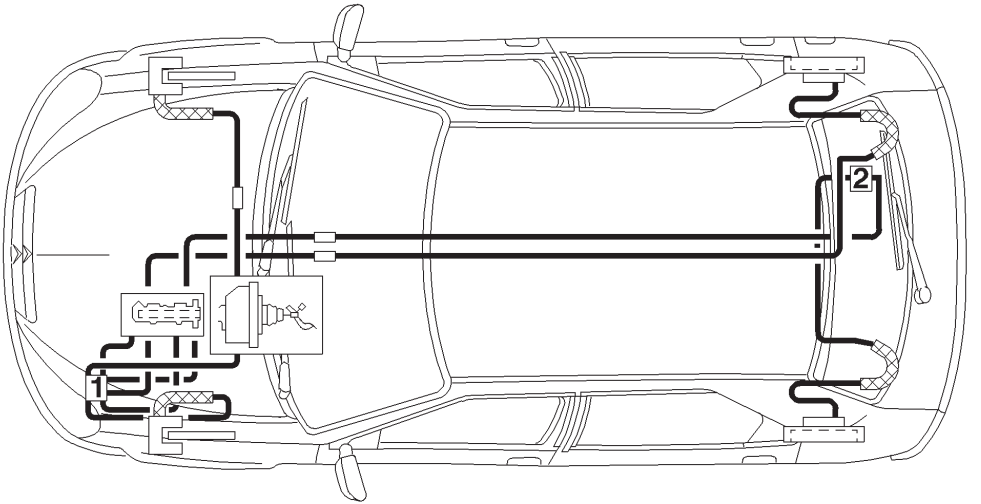


B3FP14HD

# BRAKE SPECIFICATIONS

## XSARA

| Braking system with ABS REF *(rear disc brakes)* | Braking system with ABS REF *(rear drum brakes)* |
|---|---|
| 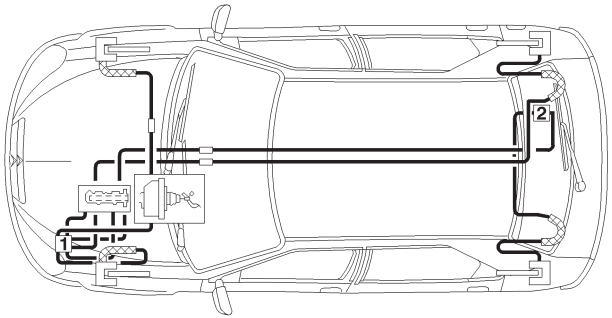 | 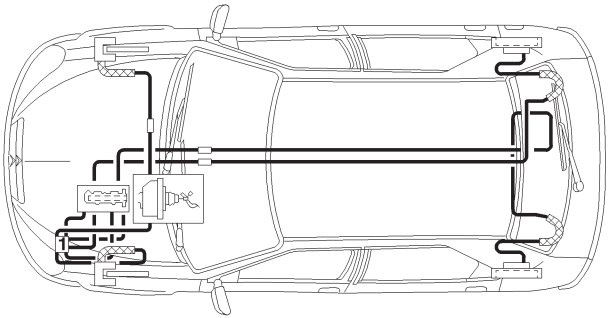 |
| B3FP14JD | B3FP14KD |

| XSARA | BRAKE SPECIFICATIONS |
|---|---|

**Braking system with ABS REF *(rear drum brakes)***

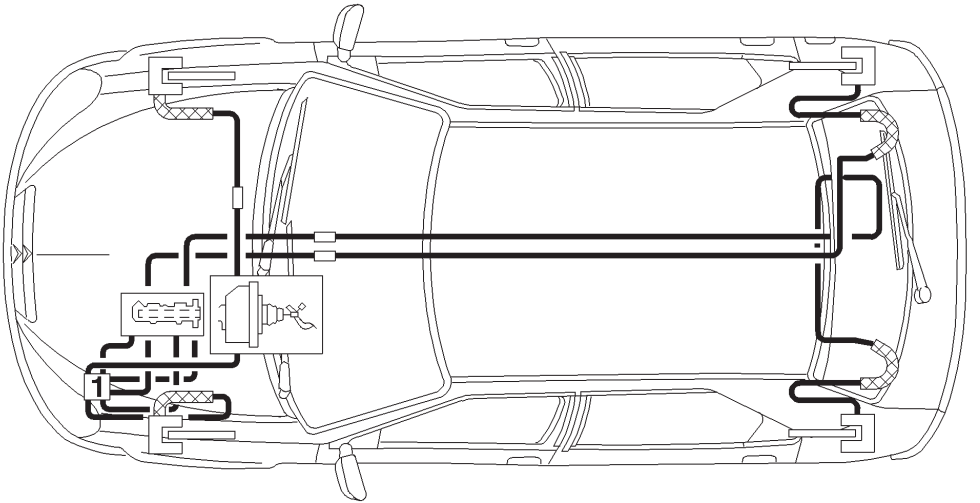


B3FP14LD

# BRAKE SPECIFICATIONS

## XSARA

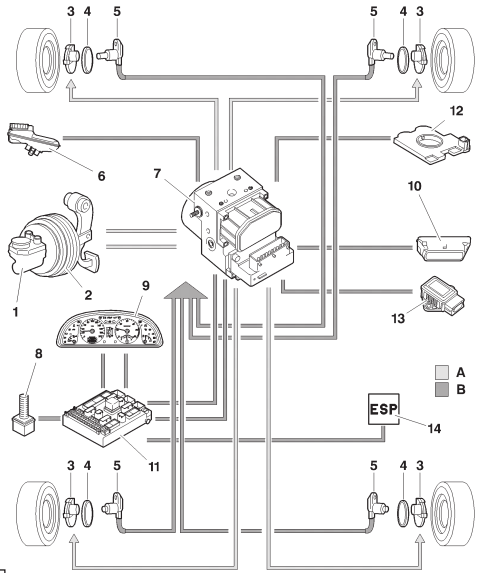


B3HP004P

### Braking circuit with ESP (BOSCH 5.7)

**(A)** Hydraulic circuit
**(B)** Electrical circuit

**(1)** Master cylinder in tandem
**(2)** Braking servo
**(3)** Brake caliper *(or drum at the rear)*
**(4)** Toothed wheel
**(5)** Wheel sensor
**(6)** Brake fluid level sensor
**(7)** Hydraulic block plus ECU
**(8)** Stoplamp switch
**(9)** Instrument panel
**(10)** Diagnostic socket
**(11)** Built-in systems interface ***(BSI)***
**(12)** Steering angle sensor
**(13)** Gyrometer/accelerometer sensor
**(14)** Switch

| XSARA | BRAKE SPECIFICATIONS | | | |
|---|---|---|---|---|
| Electrical circuit | | | | |
| **Components** | **Ref.** | **Supplier** | **Part no.** | **Observations** |
| Electronic ECU | 7 | BOSCH | 5.7 ESP | **42-way** connector.<br>Integral to the hydraulic block..<br>Changing only the ECU is prohibited. |
| Front wheel sensor | 5 | | 0 265 006 389 | **2-way** grey connector.<br>The sensors are inductive-type.<br>Tightening torque: **0,8 ± 0,2 m.daN**. |
| Rear wheel sensor *(disc brakes)* | | | 0 265 006 202 | **2-way** grey connector.<br>The sensors are inductive-type.<br>Mounted on the brake caliper support.<br>Non-adjustable airgap: **0,3 to 1,2 mm**.<br>Tightening torque: **0,8 ± 0,2 m.daN**. |
| Rear wheel sensor *(Saloon: drum brakes)* | | | 0 265 006 203 | **2-way** grey connector.<br>The sensors are inductive-type.<br>Mounted on the suspension arm.<br>Non-adjustable airgap: **0,3 to 1,2 mm**.<br>Tightening torque: **0,8 ± 0,2 m.daN**. |
| Rear wheel sensor *(Estate: drum brakes)* | | | 0 265 006 441 | |
| Steering angle sensor | 12 | VALEO | | Incorporated in the COM 2000.<br>**6-way** blue connector. |
| Gyrometer/accelerometer sensor | 13 | BOSCH | | Located on the central console.<br>**6-way** connector. |
| Toothed wheel | 4 | GKN | | Toothed wheel: **48 teeth**.<br>Integral with the driveshaft stub housing for the front wheels, joined to the hub bearing for the rear wheels. |

# BRAKE SPECIFICATIONS — XSARA

## (7) Hydraulic block

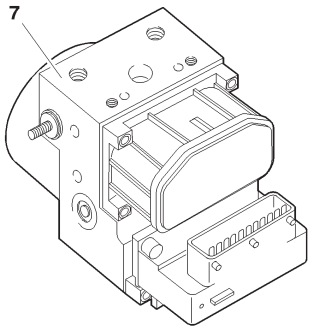


B3HP002C

| Components | Supplier | Part no. | Observations |
|---|---|---|---|
| ESP hydraulic block | BOSCH | 5.7 ESP | Located on the front LH wheelarch: **4** adjustment channels. |

## Gyrometer sensor

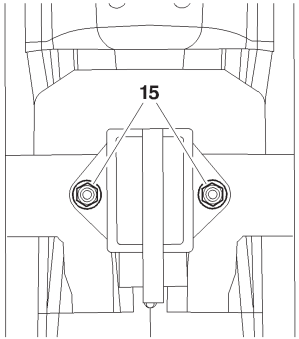


C4AP17YC

**IMPERATIVE:** Respect the direction of fitting of the gyrometer/accelerometer sensor *(connector towards the rear of the vehicle)*.

**WARNING: The gyrometer/accelerometer sensor should not be subjected to any impact. Any gyrometer/accelerometer sensor having suffered an impact must be replaced.**

Tightening torque **(15)** : **0,6 ± 0,1 m.daN**.

# HANDBRAKE

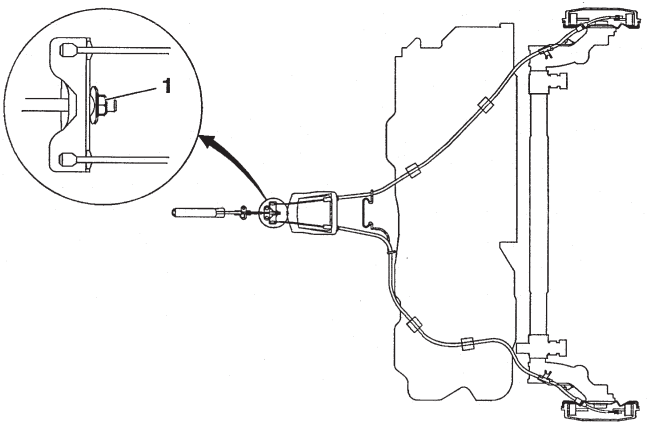


B3FP095D

**Checking and adjusting the handbrake.**

- Remove the handbrake console.
- Jack up and chock the vehicle with the rear wheels hanging free.
- Check the correct routing of the brake cables under the vehicle.
- Apply and release the handbrake ten times.
- Set the handbrake to the **3rd notch**.
- Tighten the nut **(1)** until the rear brakes are applied.
- Pull the handbrake lever vigorously **4 to 5 times**.
- Set the handbrake to the **3rd notch**.
- Check that the rear brakes are applied.
- Check that the wheels can be turned freely by hand with the handbrake released.
- Lower the vehicle.
- Refit the handbrake console.

| BLEEDING THE BRAKES | XSARA |
|---|---|

**Bleeding:**
The brakes can be bled either:
- using brake bleeding equipment, in which case the pressure of the equipment should be set to **2 Bars**.
- or in the conventional way.

**IMPERATIVE order of bleeding**

**Wheels:**

- Rear Right.
- Front Left.
- Rear Left.
- Front Right.

Top up using brake fluid supplied by **CITROEN Replacement Parts**.

| XSARA PICASSO | BRAKE SPECIFICATIONS | | | | | | |
|---|---|---|---|---|---|---|---|
| | | | Mercosur | | Europe | | | | |
| | | | Without ESP (*) | | | | | |
| | | | 2.0i 16V | 2.0 HDi | 1.6i | 1.8i 16V | 2.0i 16V | 2.0 HDi |
| Engine type | | | RFN | RHY | NFV | 6FZ | RFN | RHY |
| FT | Ø mm | Master cylinder | 23,8 | | | | | |
| | | Master vac<br>Master cylinder travel | 254/34 | | | | | |
| | | Caliper<br>piston makes | LUCAS<br>C54/54 | | BOSCH<br>ZOH54/54 | | | |
| | | Disc / Ventilated | 266 | | | | | |
| | Disc thickness/min. thickness | | 20,4/18,4 | | 22/20 | | | |
| | Makes/Brake pad grade | | JURID/3724 | | FERODO/769 (37) | | | |
| RR | Rear brake plates<br>Supplier/Type | | LUCAS/ENERGIT/C52980 | | | | | |
| | Ø mm | Cylinder or caliper | 22,2 | | | | | |
| | | Drum/Ø maxi | 228,6/230 | | | | | |
| | Make | | ABEX | | | | | |
| | Brake lining grade | | 4930/2 | | | | | |
| | Compensator/Supplier/Type<br>Cut-off pressure in Bars | | TEVESITTA *(load-sensitive rear braking compensator)*<br>20/61,6 | | | | | |
| (*) ESP + Electronic Stability Program | | | | | | | | |

| BRAKE SPECIFICATIONS | | | | | | | XSARA PICASSO |
|---|---|---|---|---|---|---|---|
| | | | All types | | | | |
| | | | Ftec ESP (*) | | | | |
| | | | 1.8i 16V | 2.0i 16V | 1.4 HDi | | 2.0 HDi |
| Engine type | | | 6FZ | RFN | 9HZ | 9HY | RHY |
| FT | Ø mm | Master cylinder | 23,8 | | | | |
| | | Master vac<br>Master cylinder travel | 254/35 | | | | |
| | | Piston Makes/Caliper | BOSCH ZOH54/54 | | | | |
| | | Disc Ventilated | 283 | | | | |
| | Disc thickness/minimum thickness | | 26/24 | | | | |
| | Makes/Brake pad grade | | FERODO/769 (37) | | | | |
| RR | Ø mm | Rear brake caliper<br>Supplier/Type | TRW C38 | | | | |
| | | Disc plain | 247 | | | | |
| | Disc thickness/minimum thickness | | 9/7 | | | | |
| | Make | | GALFER | | | | |
| | Brake lining grade | | G 4554 | | | | |
| | Compensator – cut-off in Bars | | On versions with ABS, there is no load-sensitive rear braking compensator. | | | | |

(*) ESP = Electronic Stability Program.

| XSARA PICASSO | BRAKING SYSTEM SPECIFICATIONS |
|---|---|

**Without ABS**

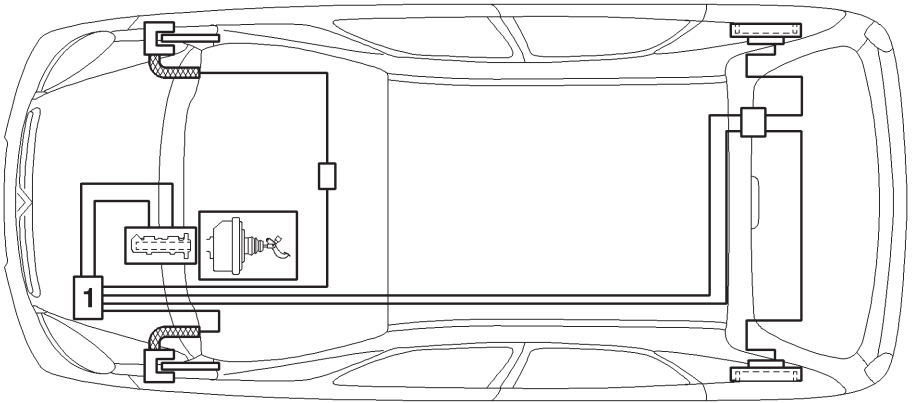


B3FP7B9D

# BRAKING SYSTEM SPECIFICATIONS

## XSARA PICASSO

### With ABS

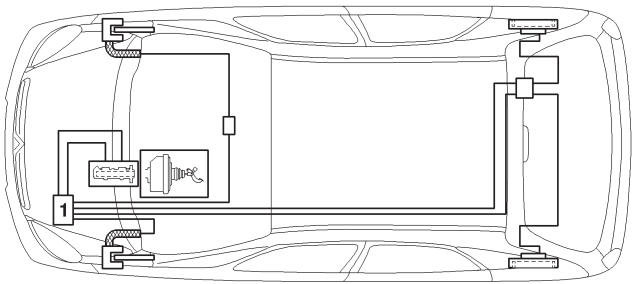


B3FP7B9D

### With EPS (Electronic Stability Program)

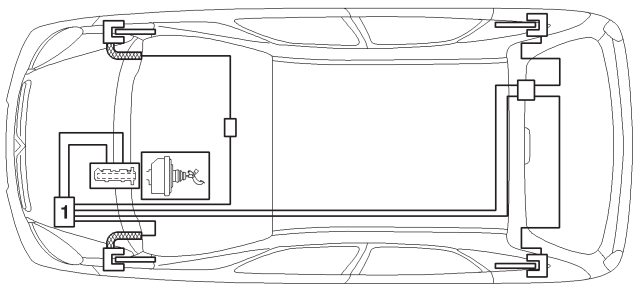


B3FP7BRD

| XSARA PICASSO | BRAKE SPECIFICATIONS |
|---|---|

1

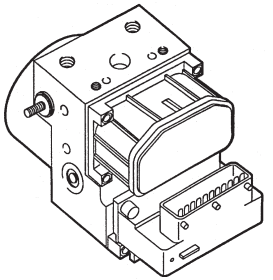

2

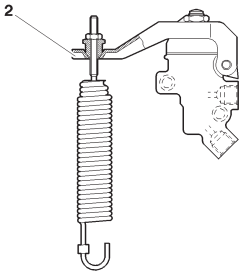


**Braking system specifications**

- **"X"** braking circuit.

- Front: disc brakes, ventilated.

- Rear: drum brakes with automatic adjustment.

- Cable operated handbrake acting on the rear wheels.
- Load sensitive braking compensator *(non ABS versions)*.

**(1)** Hydraulic valve block **«ABS Bosch 5.3»** or
**(1)** Hydraulic valve block + ECU.
**(2)** Load sensitive braking compensator *(according to version)*.

| B3FP09HC | B3FP08ND |
|---|---|

# HANDBRAKE (Adjustment)

## XSARA PICASSO

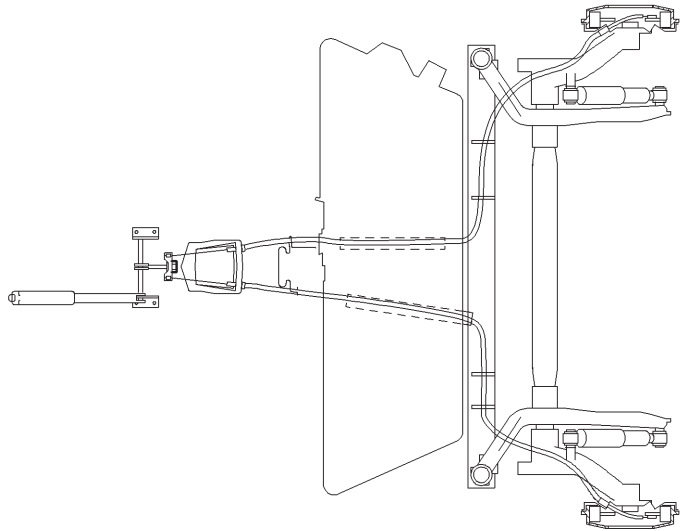

B3FP11XD

**Adjustment.**

Remove the handbrake trim **(1)**.
Unclip the sound-deadening **(2)**.
Raise and support the vehicle with the rear wheels hanging free.
Check the correct routing of the brake cables under the vehicle.
Apply and release the handbrake **4 times**.
Set the handbrake to the 5th notch.
Tighten the nut **(3)** until the rear brakes are applied.
Pull the handbrake lever vigorously **4 to 5 times**.
Set the handbrake to the 5th notch.
Check that the rear brakes are applied.
With the handbrake released, check that the wheels can be turned freely by hand.
Lower the vehicle.
Refit the sound-deadening **(2)** and the handbrake trim **(1)**.

**Tools.** Bleeding equipment of type **«LURO» or similar**.

**IMPERATIVE: For bleeding the secondary circuit, use ELIT, LEXIA or PROXIA diagnostic tools.**

**Draining.**

Drain the brake fluid reservoir as empty as possible using a syringe.
Disconnect the brake fluid warning lamp connector.
Retrieve the brake fluid reservoir from its supply pipes by pulling upwards.
Finish emptying the reservoir of brake fluid.
Clean the brake fluid reservoir.
Refit the brake fluid reservoir.
Reconnect the brake fluid warning lamp connector.

**Filling.**

Refill the reservoir with brake fluid.
**WARNING:** Use only the recommended hydraulic fluids.

**Bleeding.**

**NOTE:** Two technicians are required.

IMPERATIVE: During bleed operations, ensure that the level of brake fluid is maintained in the reservoir and top it up, use only new brake fluid.

Bleed each wheel cylinder, proceeding in the following order:

Rear right hand wheel.
Front left hand wheel.
Rear left hand wheel.
Front right hand wheel.

## Abbreviations and definitions

**Coding of climates is as follows:**

**CLIMATES:**

| | | |
|---|---|---|
| **C** | **Hot** | : Starting possible as low as -18°C. |
| **T** | **Temperate** | : Starting possible as low as -18°C. |
| **F** | **Cold** | : Starting possible as low as -25°C. |
| **GF** | **Very cold** | : Starting possible as low as -30°C. |

**Meaning of abbreviations:**

| | |
|---|---|
| **BV** | : Gearbox. |
| **M** | : Manual gearbox. |
| **A** | : Automatic gearbox. |
| **MAP** | : Piloted manual gearbox. |
| **DA** | : Power-assisted steering. |
| **REFRI** | : Air conditioning. |

| ALL TYPES | STARTER MOTORS | | | | |
|---|---|---|---|---|---|
| Vehicles/models | Starter type | | | Class | Climate |
| Table of class of starter motors | | | | | |
| CLASS | CLASS 2 | CLASS 3 | CLASS 4 | CLASS 5 | CLASS 6 |
| Torque C | 5.5 Nm | 6 Nm | 10 Nm | 11.5 Nm | 11.5 Nm |
| Maximum power for a speed of 1200 rpm | I ≤ 275 A | I ≤ 300 A | I ≤ 430 A | I ≤ 470 A | I ≤ 500 A |

| STARTER MOTORS | | | | C2 |
|---|---|---|---|---|
| Vehicles/models | | Gearboxes | Class | Climate |
| C2 | 1.1i | M | 1 | C |
| | | | | T |
| | | | | F |
| | | | 3 | GF |
| | 1.1i Réfri | | 1 | C |
| | | | | T |
| | | | 3 | F |
| | | | | GF |
| | 1.4i | M-MAP | 1 | C-T |
| | | | 2 | F |
| | | | 3 | GF |
| | 1.4i Réfri | | 1 | C |
| | | | | T |
| | | | 3 | F |
| | | | | GF |

| C2 | STARTER MOTORS | | | |
|---|---|---|---|---|
| Vehicles/models | | Gearboxes | Class | Climate |
| C2 | 1.6i 16V | M-MAP-A | 3 | C |
| | | | | T |
| | | | | F |
| | | | | GF |
| | 1.4 HDi | M-MAP | 4 | C |
| | | | | T |
| | | | 5 | F |
| | | | | GF |

| STARTER MOTORS | | | | C3 |
|---|---|---|---|---|
| Vehicles/models | | Gearboxes | Class | Climate |
| C3 | 1.1i | M | 1 | C |
| | | | | T |
| | | | | F |
| | | | 3 | GF |
| | 1.1i Réfri | | 1 | C |
| | | | | T |
| | | | 3 | F |
| | | | | GF |
| | 1.4i | M-MP | 1 | C |
| | | | | T |
| | | | 2 | F |
| | | | 3 | GF |
| | | A | 3 | C |
| | | | | T |
| | | | | F |
| | | | | GF |
| | 1.4i Réfri | M-MP | 1 | C |
| | | | | T |
| | | | 3 | F |
| | | | | GF |

| C3 | STARTER MOTORS | | | |
|---|---|---|---|---|
| Vehicles/models | | Gearboxes | Class | Climate |
| C3 | 1.4i 16V | M-MAP | 1 | C |
| | | | | T |
| | | | 3 | F |
| | | | | GF |
| | 1.6i 16V | | 3 | C |
| | | | | T |
| | | | | F |
| | | | | GF |
| | 1.4 HDi | | 4 | C |
| | | | | T |
| | | | 5 | F |
| | | | | GF |
| | 1.4 HDi 16V | M | 4 | C |
| | | | | T |
| | | | 5 | F |
| | | | | GF |

| STARTER MOTORS | | | C3 PLURIEL | |
|---|---|---|---|---|
| Vehicles/models | | Gearboxes | Class | Climate |
| C3 Pluriel | 1.4i | M-MAP | 1 | C |
| | | | | T |
| | | | 2 | F |
| | | | 3 | GF |
| | 1.4i Réfri | | 1 | C |
| | | | | T |
| | | | 3 | F |
| | | | | GF |
| | 1.6i 16V | M-MAP-A | 3 | C |
| | | | | T |
| | | | | F |
| | | | | GF |
| | 1.4 HDi | M | 4 | C |
| | | | | T |
| | | | 5 | F |
| | | | | GF |

| XSARA | STARTER MOTORS | | | |
|---|---|---|---|---|
| Vehicles/models | | Gearboxes | Class | Climate |
| XSARA | 1.4i | M | 1 | C |
| | | | | T |
| | | | 2 | F |
| | | | 3 | GF |
| | 1.4i Réfri | | 1 | C |
| | | | | T |
| | | | 3 | F |
| | | | | GF |
| | 1.4i Réfri + DA | | 2 | C |
| | | | | T |
| | | | 3 | F |
| | | | | GF |

| STARTER MOTORS | | | | XSARA |
|---|---|---|---|---|
| Vehicles/models | | Gearboxes | Class | Climate |
| XSARA | 1.6i 16V | M | 3 | C |
| | | | | T |
| | | | | F |
| | | | | GF |
| | | A | | C |
| | | | | T |
| | | | | F |
| | | | | GF |
| | 2.0i 16V | M | 3 | C |
| | | | | T |
| | | | 4 | F |
| | | | | GF |
| | | A | 3 | C |
| | | | | T |
| | | | 4 | F |
| | | | | GF |

| XSARA | STARTER MOTORS | | | |
|---|---|---|---|---|
| Vehicles/models | | Gearboxes | Class | Climate |
| XSARA | 2.0i 16V | M | 3 | C |
| | | | | T |
| | | | 4 | F |
| | | | | GF |
| | 1.9 D | | 4 | C |
| | | | | T |
| | | | 5 | F |
| | | | 6 | GF |
| | 2.0 HDi | | 4 | C |
| | | | | T |
| | | | 6 | F |
| | | | | GF |

| STARTER MOTORS | | | | XSARA |
|---|---|---|---|---|
| Vehicles/models | | Gearboxes | Class | Climate |
| XSARA | 2.0 HDi | M | 5 | C |
| | | | | T |
| | | | 6 | F |
| | | | | GF |
| | | A | 6 | C |
| | | | | T |
| | | | 6+ | F |
| | | | | GF |
| | 1.4 HDi | M | 4 | C |
| | | | | T |
| | | | 5 | F |
| | | | | GF |

| XSARA PICASSO | STARTER MOTORS | | | |
|---|---|---|---|---|
| Vehicles/models | | Gearboxes | Class | Climate |
| XSARA PICASSO | 1.6i | M | 1 | C |
| | | | | T |
| | | | 2 | F |
| | | | 3 | GF |
| | | | 1 | C |
| | | | | T |
| | | | 3 | F |
| | | | | GF |
| | | | 2 | C |
| | | | | T |
| | | | 3 | F |
| | | | | GF |
| | 1.8i 16V | | 3 | C |
| | | | | T |
| | | | | F |
| | | | 4 | GF |

| STARTER MOTORS | | | XSARA PICASSO | |
|---|---|---|---|---|
| Vehicles/models | | Gearboxes | Class | Climate |
| XSARA PICASSO | 2.0i 16V | M-A | 3 | C |
| | | | | T |
| | | | 4 | F |
| | | | | GF |
| | 1.6 HDi 16V | M | 5 | C |
| | | | | T |
| | | | 6 | F |
| | | | | GF |
| | 2.0 HDi | | 4 | C |
| | | | | T |
| | | | 6 | F |
| | | | | GF |

## Abbreviations and definitions

**Coding of climates is as follows:**

**CLIMATES:**

| | |
|---|---|
| **C** | : Hot *(45°C/37°C)*. |
| **T** | : Temperate *(37°C/17°C)*. |
| **F** | : Cold *(17°C/-25°C)*. |
| **GF** | : Very cold *(<-25°C)*. |

**Meaning of abbreviations:**

| | |
|---|---|
| **BV** | : Gearbox. |
| **BVM** | : Manual gearbox. |
| **BVA** | : Automatic gearbox. |
| **BVMP** | : Piloted manual gearbox. |
| **NON REFRI** | : Without air conditioning. |
| **REFRI** | : With air conditioning. |
| **DA** | : Power-assisted steering. |
| **GEP** | : Electro-pump motor. |
| **DP** | : Double lug. |
| **3 Pts** | : 3-Point. |
| **NC** | : Not marketed. |
| **TT** | : All Types. |
| **N** | : Level. |
| **SOP** | : Without Option. |
| **TOP** | : All Options. |
| **L.C.** | : Heated rear screen. |
| **DAG** | : Left hand drive. |
| **DAD** | : Right hand drive. |

# ALTERNATORS — C2

## Allocation of alternator classes

| Engine Gearbox | Climate | Without aircon | | | | | | With aircon | | | | | |
|---|---|---|---|---|---|---|---|---|---|---|---|---|---|
| | | Without cold pack | | | With cold pack | | | Without cold pack | | | With cold pack | | |
| | | Base | RT3 N1 or N2 | RT3 N3 | Base | RT3 N1 or N2 | RT3 N3 | Base | RT3 N1 or N2 | RT3 N3 | Base | RT3 N1 or N2 | RT3 N3 |
| 1.1i BVM | C | 7 | | | | | | 8 | | | 8 | | |
| | T | | | | | | | 7 | 8 | | 7 | 8 | |
| | F | | | | | | | | 7 | | | 7 | |
| | GF | | | | | | | | | | | | |
| 1.4i BVMP | C | 7 | | 7 | 7 | | | 9 | | | | | |
| | T | | | | | | | 7 | 8 | | 8 | | |
| | F | | | | 8 | | | | 7 | | | | |
| | GF | | | 8 | | | | | 8 | | | | |
| 1.6i 16V BVM | C | 7 | | 7 | 7 | | | 9 | | | | | |
| | T | | | | | | | 7 | 8 | | 8 | | |
| | F | | | | 8 | | | | | 7 | | | |
| | GF | | | 8 | | | | | | 8 | | | |
| 1.4 HDi BVM | C | 15 | | | | | | | | | | | |
| | T | | | | | | | | | | | | |
| | F | | | | | | | | | | | | |
| | GF | | | | | | | | | | | | |

Meaning of abbreviations, see page: **472**.

| C3 - C3 PLURIEL | ALTERNATORS | | | | | | | | | | | | |
|---|---|---|---|---|---|---|---|---|---|---|---|---|---|
| Allocation of alternator classes | | | | | | | | | | | | | |
| | | Without aircon | | | | | | With aircon | | | | | |
| | | Without cold pack | | | With cold pack | | | Without cold pack | | | With cold pack | | |
| Engine Gearbox | Climate | Base | RT3 N1 or N2 | RT3 N3 | Base | RT3 N1 or N2 | RT3 N3 | Base | RT3 N1 or N2 | RT3 N3 | Base | RT3 N1 or N2 | RT3 N3 |
| 1.1i BVM | C | 7 | | | | | | 8 | | | | | |
| | T | | | | | | | | | | | | |
| | F | | | | | | | 7 | | | | | |
| | GF | 8 | | | | | 9 | 8 | | | | 9 | |
| 1.4i BVM | C | 7 | | | | | | 7 | | 8 | 7 | | 8 |
| | T | | | | | | | | | 7 | | | 7 |
| | F | | | | | | | | | | | | |
| | GF | 8 | | | | | | | | | | | |
| 1.4i BVA | C | 7 | | | | | 7 | 8 | | 9 | 8 | 8 | 9 |
| | T | | | | | | | | | 8 | | | 8 |
| | F | | | | | | 8 | 7 | | | | | |
| | GF | 9 | | | | | | | | | | | |
| 1.4i 16V BVMP | C | 7 | | | | | | 8 | | | | | |
| | T | | | | | | | | | | | | |
| | F | | | | | | | 7 | | | | | |
| | GF | 8 | | | 9 | | | 8 | 9 | | | | |

Meaning of abbreviations, see page: **472**.

# ALTERNATORS — C3 - C3 PLURIEL

## Allocation of alternator classes

| Engine Gearbox | Climate | Without aircon | | | | | | With aircon | | | | | |
|---|---|---|---|---|---|---|---|---|---|---|---|---|---|
| | | Without cold pack | | | With cold pack | | | Without cold pack | | | With cold pack | | |
| | | Base | RT3 N1 or N2 | RT3 N3 | Base | RT3 N1 or N2 | RT3 N3 | Base | RT3 N1 or N2 | RT3 N3 | Base | RT3 N1 or N2 | RT3 N3 |
| 1.6i 16V BVM | C | 7 | | | | | | 8 | | | | | |
| | T | | | | | | | | | | | | |
| | F | | | | | | | 7 | | | | | |
| | GF | 8 | | | | | 9 | 8 | | | 9 | | |
| 1.6i 16V BVMP | C | 7 | | | | | | 8 | | | | | |
| | T | | | | | | | | | | | | |
| | F | | | | | | | 7 | | | | | |
| | GF | 8 | | | 9 | | | 8 | | | 9 | | |
| 1.4 HDi 1.4 HDi 16V | C | 15 | | | | | | | | | | | |
| | T | | | | | | | | | | | | |
| | F | | | | | | | | | | | | |
| | GF | | | | | | | | | | | | |

Meaning of abbreviations, see page: **472**.

| XSARA | ALTERNATORS | | | | | | | | |
|---|---|---|---|---|---|---|---|---|---|
| Allocation of alternator classes | | | | | | | | | |
| | | Without aircon | | | | With aircon | | | |
| | | Without cold pack | | With cold pack | | Without cold pack | | With cold pack | |
| Engine Gearbox | Climate | Base | RT2 | Base | RT2 | Base | RT2 | Base | RT2 |
| 1.4i<br>1.6i 16V<br>BVM | C | 8 | | | | 9 | | | |
| | T | | | | | 8 | | | |
| | F | | | | | | | | |
| | GF | | | | | | | | |
| 1.6i 16V<br>BVA | C | 8 | | | 8 | 9 | | | |
| | T | | | | | | | | |
| | F | | | | | 8 | | | |
| | GF | | | | 9 | | | | |
| 2.0i 16V<br>BVM | C | | | | | 12 | 12 | 12 | 12 |
| | T | | | | | 8 | | 8 | |
| | F | | | | | | 8 | | 8 |
| | GF | | | | | | | | |

Meaning of abbreviations, see page: **472**.

# ALTERNATORS — XSARA

## Allocation of alternator classes

| Engine Gearbox | Climate | Without aircon | | | | With aircon | | | |
|---|---|---|---|---|---|---|---|---|---|
| | | Without cold pack | | With cold pack | | Without cold pack | | With cold pack | |
| | | Base | RT2 | Base | RT2 | Base | RT2 | Base | RT2 |
| 2.0i 16V BVA | C | | | | | 12 | | | |
| | T | | | | | | | | |
| | F | | | | | 8 | | | |
| | GF | | | | | 12 | | | |
| 2.0i 16V BVM | C | | | | | 8 | | | |
| | T | | | | | | | | |
| | F | | | | | | | | |
| | GF | | | | | | | | |
| 1.9 D BVM | C | 8 | | | 8 | 9 | | 9 | |
| | T | | | | | | | | |
| | F | | | | 9 | 8 | | | |
| | GF | 9 | | | | 9 | | | |

Meaning of abbreviations, see page: **472**.

| XSARA | ALTERNATORS | | | | | | | | |
|---|---|---|---|---|---|---|---|---|---|
| Allocation of alternator classes | | | | | | | | | |
| | | Without aircon | | | | With aircon | | | |
| | | Without cold pack | | With cold pack | | Without cold pack | | With cold pack | |
| Engine Gearbox | Climate | Base | RT2 | Base | RT2 | Base | RT2 | Base | RT2 |
| 1.4 HDi BVM | C | | | | | | | | |
| | T | 15 | | | | | | | |
| | F | | | | | | | | |
| | GF | | | | | | | | |
| 2.0 HDi BVM | C | | | | | | | | |
| | T | | | | | | | | |
| | F | | | | | | | | |
| | GF | | | | | | | | |
| 2.0 HDi BVA | C | | | | | | | | |
| | T | | | | | | | | |
| | F | | | | | | | | |
| | GF | | | | | | | | |

Meaning of abbreviations, see page: **472**.

| ALTERNATORS | | | | | | | | | XSARA PICASSO |
|---|---|---|---|---|---|---|---|---|---|
| Allocation of alternator classes | | | | | | | | | |
| | | Without aircon | | | | With aircon | | | |
| Engine Gearbox | Climate | Base | Heated seat | Nav. | Nav. + Heated seat | Base | Heated seat | Nav. | Nav. + Heated seat |
| 1.6i BVM | C | | | | | 8+ | | | |
| | T | 7 | | | | | | | |
| | F | 8+ | | | | | | | |
| | GF | | | | | | | | |
| 1.8i 16V BVM | C | | | | | 12 | | | |
| | T | 8+ | | | | | | | |
| | F | | | | | | | | |
| | GF | | | | | | | | |
| 2.0i 16V BVA | C | | | | | 12 | | | |
| | T | 8+ | | | | | | | |
| | F | | | | | 8+ | | | |
| | GF | | | | | | | | |
| 1.6 HDi 16V 2.0 HDi | C | | | | | 15 | | | |
| | T | 15 | | | | | | | |
| | F | | | | | | | | |
| | GF | | | | | | | | |

Meaning of abbreviations, see page: **472**.

# CHARGING CIRCUIT - ALTERNATOR WITH MONO-FUNCTION REGULATOR

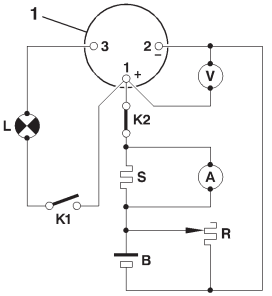


D1AP025C

**A** : Ammeter.
**B** : Battery.
**G** : Generator.
**L** : Warning lamp.
**K1** and **K2** : Switch.
**R** : Electric charge.
**S** : Shunt 200mV/200A.
**V** : Voltmeter.
**1** : Alternator.

**Checking the alternator output.**

Connect as shown in the diagram opposite, using an ammeter **(A)**, a voltmeter **(V)**, and a rheostat **(R)** or a Volt/Ammeter/Rheostat combination.
Referring to the vehicle's equipment specification *(see table opposite)*, adjust the engine speed and rheostat charge to obtain **U = 13.5 V**.
**Reminder:** The excitation energising current will flow through the warning lamp; check that the warning lamp comes on when the ignition is switched on. It should go out when the engine has started *(accelerate slightly)*.

**Checking the voltage regulator.**

Set the rheostat to zero and disconnect all the electrical consumers.
Display **3000** alternator **rpm**. If **U alternator is > 14.7 V**, the regulator is faulty.

**Note:** These tests should be performed with the engine hot and the battery fully charged.

**Method of reading the alternator speed.**

Fit a reflecting shim on the pulley of the alternator.
Adjust a stroboscope to the frequency equivalent to the control speed.
*(e.g. 2000 rpm = 2000/60 = 83 Hz)*.
Adjust the engine speed so that the shim appears fixed.

## CHARGING CIRCUIT - ALTERNATOR WITH MONO-FUNCTION REGULATOR

**MINIMUM OUTPUTS (in A)**

| Alternator speed | Min. output | Class | | | | | | |
|---|---|---|---|---|---|---|---|---|
| | | 6 | 7 | 8 | 9 | 12 | 15 | 18 |
| 1800 rpm | 11 | 27 | 39 | 46 | 61 | 73 | 89 | 108 |
| 2000 rpm | 12 | 34 | 46 | 54 | 68 | 80 | 105 | 123 |
| 3000 rpm | 13 | 47 | 60 | 68.5 | 84 | 100 | 139 | 164 |
| 4000 rpm | 14 | 55 | 65 | 75 | 92 | 110 | 145 | 176 |
| 6000 rpm | 15 | 61 | 69 | 78.5 | 96 | 120 | 151 | 183 |
| 8000 rpm | 16 | 63 | 70 | 80 | 97 | 123 | 157 | 188 |
| 15000 rpm | 17 | 64 | 73 | 82 | 97 | 124 | 157 | 188 |

**MINIMUM YIELDS (in %)**

| Alternator speed | Class | | | | | | |
|---|---|---|---|---|---|---|---|
| | 6 | 7 | 8 | 9 | 12 | 15 | 18 |
| 1800 rpm | 49 | 50 | 52 | 57 | 58 | 60 | 61 |
| 2000 rpm | 48 | 49 | 51 | 54 | 55 | 57 | 60 |
| 3000 rpm | 45 | 46 | 48 | 51 | 52 | 54 | 56 |
| 4000 rpm | 43 | 44 | 46 | 48 | 50 | 52 | 53 |
| 6000 rpm | 39 | 40 | 42 | 43 | 48 | 50 | 50 |
| 8000 rpm | 26 | 37 | 39 | 40 | 45 | 48 | 48 |
| 15000 rpm | 24 | 25 | 27 | 29 | 34 | 38 | 38 |

| TOUS TYPES | | | PRE-HEATING AND STARTING SYSTEMS | | |
|---|---|---|---|---|---|
| **Vehicles - models** | | | **Pre-heater plugs** | **Pre-heater control unit** | **Pre/Post heating** ***(pre-heating duration at 20°C)*** |
| **C2** | **1.4 HDi** | **8HX** | NGK YE04 | NAGARES 960411-P | Controlled by the diesel injection ECU. |
| | | | | CARTIER 735068 | |
| **C3** | **1.4 HDi** | **8HW 8HX** | NGK YE04 | NAGARES 960411-P | |
| | | | | CARTIER 735068 | |
| | **1.4 HDi 16V** | **8HV 8HY** | NGK YE04 | NAGARES 960411-P | |
| | | | | NAGARES 960411-P | |
| **XSARA** | **1.9 D** | **WJY** | BERU 0 100 226 371 | CARTIER 735068 | 10s / 150s |
| | | | CHAMPION CH 185 | NAGARES 960411-P | |
| | **1.4 HDi** | **8HZ** | NGK YE04 | NAGARES 960411-P | Controlled by the diesel injection ECU. |
| | | | | CARTIER 735068 | |
| | **2.0 HDi** | **RHY** | CHAMPION CH170 | CARTIER 735068 | |
| | | | | NAGARES 960411-P | |
| | **2.0 HDi** | **RHZ** | CHAMPION CH 170 | CARTIER 735068 | |
| | | | | NAGARES 960411-P | |
| **PICASSO** | **2.0 HDi** | **RHY** | CHAMPION CH 170 | CARTIER 735068 | |
| | | | | NAGARES 960411-P | |

## AIR CONDITIONING R 134 a (HFC)

| Vehicle | Engines | Date | Refrigerant refill | Compressor | | |
|---|---|---|---|---|---|---|
| | | | | Variable Capacity | Oil quantity cc | Oil reference |
| **C2** | ALL TYPES | 05/2003 ➔ | 600 + 0 - 50 gr | SD 6 V 12 | 135 | SP 10 |
| **C3**<br>**C3 Pluriel** | ALL TYPES | 11/2001 ➔ | 625 + 0 - 50 gr | | | |
| **XSARA** | TU EW | 09/2000 ➔ | 590 gr + 0 - 50 gr | | | |
| | DW | | | SD 7 V 16 | | |
| | XU10 | | 725 gr + 0 - 50 gr | | | |
| **XSARA PICASSO** | TU | 12/1999 ➔ | 675 gr ± 50 gr | SD 6 V 12 | | |
| | EW7 - DW10 | | | SD 7 V 16 | | |
| | **BRESIL** ALL TYPES | 03/2001 ➔ | 775 gr ± 25 gr | | | |

AIRCON

## SPECIAL FEATURES: AIR CONDITIONING SYSTEM (R 134.a)

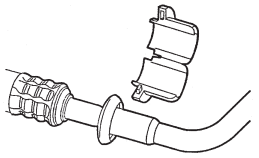

C5HP073C

| Vehicle | | Click-fit connector removing/fitting tool | | |
|---|---|---|---|---|
| | | Ø Inch | Ring colour | Tool kit 4164-T |
| XSARA | TT | 5/8 | Black | 8005-T.A |
| XSARA PICASSO | BP | | | |
| | HP | 3/8 | Red | 8005-T.C |

**Aircon compressor fixings.**

**ESSENTIAL: Tighten the front part of the compressor *(timing belt end)*, before the rear part of the compressor.**

**Tightening torques (m.daN).**

| | Unions | |
|---|---|---|
| Ø Pipes | Steel/Steel | Aluminium/Steel |
| M 06 | 1,7 ± 0,3 | 1,3 ± 0,3 |
| M 08 | 3,8 ± 0,3 | 2 ± 0,2 |
| M 10 | 4 ± 0,3 | 2,5 ± 0,3 |

**NOTE:** Tighten the union to the recommended torque using a retaining spanner whenever possible.

**NOTE:** For operations concerning draining, drying *(empty)*, checking and recharging of a system: **refer to BRE 0290**.
**WARNING: For R 134.a quantities** *(see table on preceding page: **483**)*.

## «EUROCLIM»

**Tools.**

Tool for removing-refitting air conditioning seals **: FACOM (-).1702**

**IMPERATIVE: Removing-refitting the MANULLI seal**
***(see corresponding operation).***

**MANULLI seal.**

**C2 C3** **: All engine-versions**
**XSARA**
***(Compressor and condenser end)*** **: 08/2000 ➔**
**XSARA PICASSO**
***(Compressor end)*** **: 11/2002 ➔**
**Engine-versions:**
**- NFV** **: 10/12/2001 ➔**
**- 6FZ** **: 01/04/2002 ➔**
**- RHY** **: 04/11/2002 ➔**

**Aircon compressor.**

**XSARA PICASSO** engine versions **: 6FZ and RHY**
**Discontinuation** of compressor **SD 6 V 12**
**Replaced** by compressor **SD 7 V 16** **: 04/11/2002 ➔**

## Compressor (MANULLI seal)

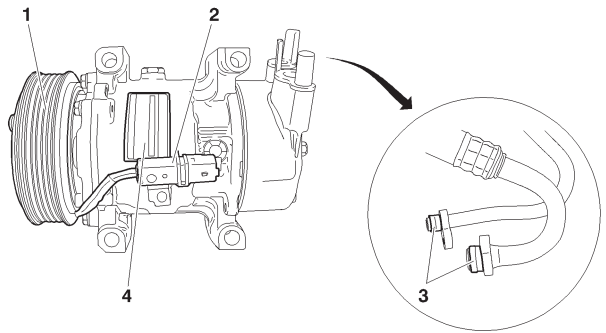


C5HP18UD

The drive plate **(1)** is held on the aircon compressor shaft by ribs.
New wiring **(2)**.
New seals **(3) (MANULLI)**.
Identification label **(4)** for aircon compressor.

## Condenser (MANULLI seal)

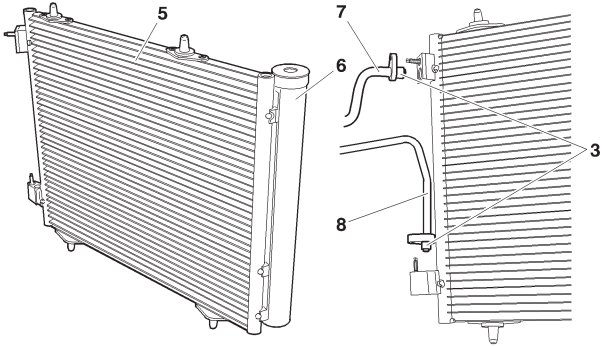


C5HP18VD

The condenser **(5)** has a cylinder **(6)** incorporating the function of aircon fluid reservoir and with integral filtering cartridge.
The inlet **(7)** and the outlet **(8)** of the condenser **(5)** are equipped with new seals **(3) (MANULLI)**.

## Seals (MANULLI seal)

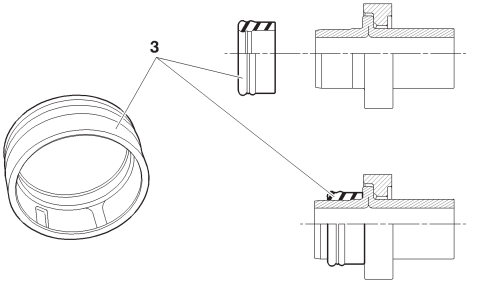


C5HP18XD

**MANULLI** calibrated seal **(3)**.
Direction of fitting of the seal **(3)**.
Before fitting the seal, amply lubricate the seal with air conditioning compressor oil **(SP10)**.

## SPECIAL FEATURES: AIR CONDITIONING SYSTEM (R 134.a)

**Presence of pollen filter**

| Vehicle | Equipment | RPO No. | Presence of filter | Observations |
|---|---|---|---|---|
| **SAXO** | ALL TYPES | | **NO** | |
| **C2 - C3** | | | **YES** | |
| **XSARA**<br>**XSARA PICASSO** | Without aircon | | **YES** *(Behr)* | Except driving school |
| | Base aircon | | **YES** *(Larger)* | |
| | Regulated aircon | | **YES** *(Valéo)* | |
| **BERLINGO** | Without aircon | | **NO** *(Valéo)* | |
| | Base aircon | | **YES** *(Valéo)* | |

## Pollen filter

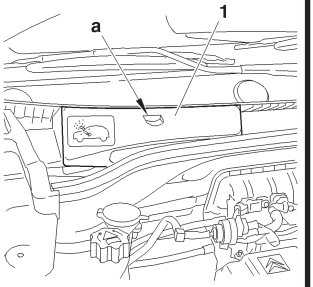


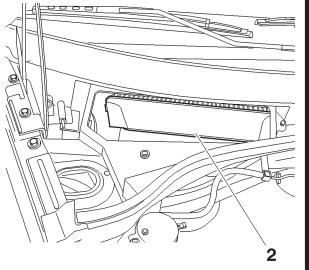


**Note:** The pollen filter is located in the engine compartment on the RH side.

**Removing.**

To remove:
- Pull on the tab of the plastic cover **(1)**, at **«a»**.

- Tilt the flap **(2)**.

- Remove the pollen filter **(3)**.

**Refitting.**

Proceed in reverse order.

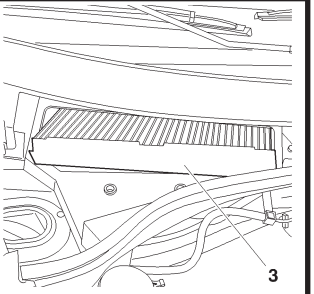


C4AP1BRC C4AP1BSC C4AP1BTC

## Pollen filter

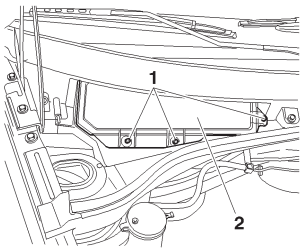


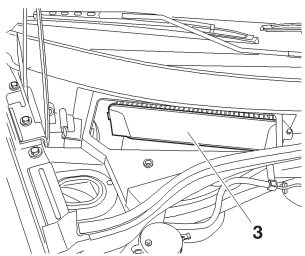


**Note:** The pollen filter is located in the engine compartment on the RH side.

**Removing.**

Remove:
- The three screws **(1)**.
- The plastic cover **(2)**.

Tilt the flap **(3)**.

Remove the pollen filter **(4)**.

**Refitting.**

Proceed in reverse order.

C4AP169C | C4AP16AC | C4AP16BC

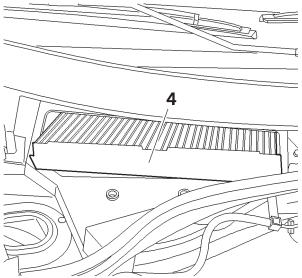

## Changing the filtering/drying cartridge

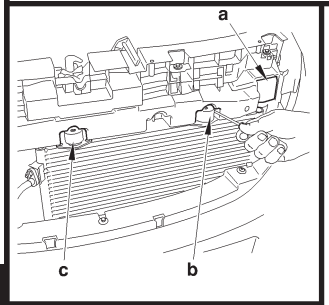


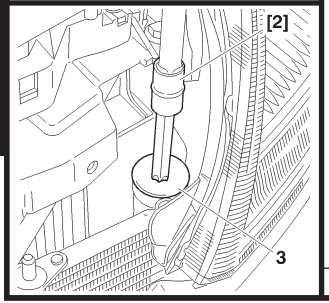


**Tools.**

| | | |
|---|---|---|
| **[1]** Charge station | : *(according to workshop equipment)* | |
| **[2]** TORX adaptor | **: TORX 70 FACOM** | |
| **[3]** Inertia extractor | **:1671-T** | **Tool kit 4114-T** |
| **[4]** Endpiece **Ø 20** | **: 1671-T.D20** | |
| **[5]** Set of plugs | **: (-).0188.T** | |
| **[6]** Circlip pliers | **: FACOM** | |

**Removing.**

Depressurise the aircon circuit, using tool **[1]**.
Remove the grille.
At «**a**», remove the pin and the plastic cover.
Unclip the condenser at «**b**» and «**c**», using a screwdriver.
Tilt the condenser towards the front.
Lift and release the condenser.
Clean the area around the cap **(3)**.
Remove the plastic cap **(3)**, using tool **[2]**.
Remove the safety circlip **(4)**, using tool **[6]**.
Position the tool **[3]** and **[4]** in the aperture of the cartridge **(5)**.
Extract the cartridge from the reservoir **(6)**, using tool **[3]** and **[4]**.
Block the reservoir **(6)**, using tool **[5]**.

C4AP163C | C4AP164C

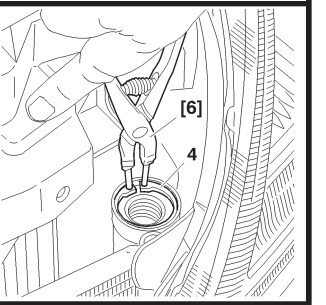


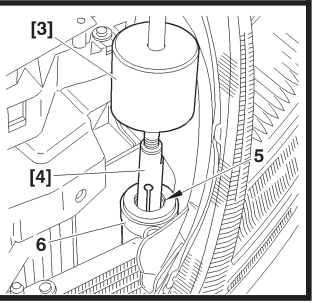


C4AP165C | C4AP166C

## Changing the filtering/drying cartridge

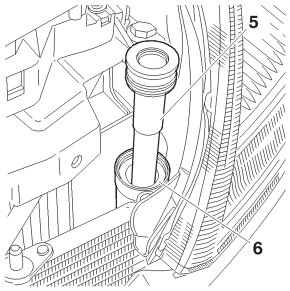


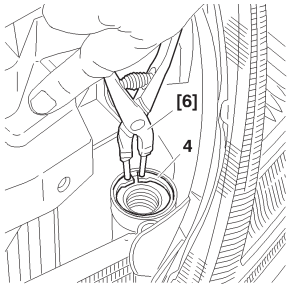


**Refitting.**
Remove the new cartridge from its packaging.
Do not expose the cartridge, the filter and seals to pollutants.
Lightly oil the seals *(compressor oil)*.
Remove tool **[5]** from the reservoir **(6)**.
Insert the new cartridge **(5)** into the reservoir **(6)**.
Refit the safety circlip **(4)**, using tool **[6]**.
Make sure that the circlip **(4)** is correctly positioned in its location.

**WARNING: Not more than 5 minutes should elapse between the removal of the cartridge (6) from its packaging and its being fitted.**

Refit:
- The plastic cap **(3)**, using tool **[5]** - Tighten to **1,2 ± 0,1 m.daN**.
- The condenser *(reclip, pushing at «**b**» and «**c**»)*.
- The plastic cover and the pins at **«a»**.
- The grille **(2)**.
- The screws **(1)**.

Proceed to:
- Recharge the circuit *(see corresponding operation)*.
- Check the operation of the air conditioning *(see corresponding operation)*.

C4AP167C | C4AP165C | C4AP163C | C4AP164C

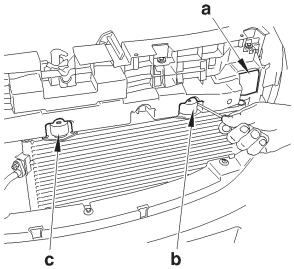


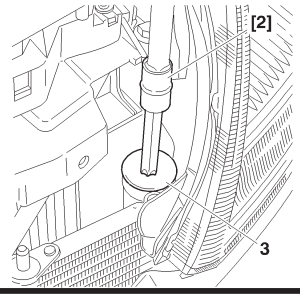

## Pollen filter

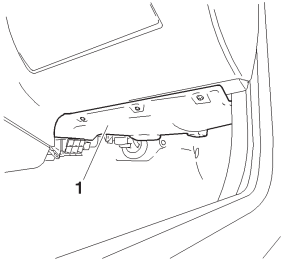


C5HP07JC

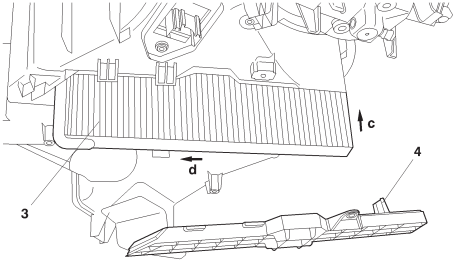


C5FP075D

**Removing-refitting.**

Remove:
- The interior trim **(1)**.
- The cover **(4)**.
- The pollen filter **(3)**.

**Concerns vehicles equipped with aircon without temperature regulation.**

Fitting of a new pollen filter necessitates the following operations:
- Engage the pollen filter upwards *(following arrow «**c**»)*.
- Slide the pollen filter towards the rear *(following arrow «**d**»)*.
- Position the index **(4)** on the cover forward of the pollen filter *(**(4)** Index on the cover)*.

## Pollen filter

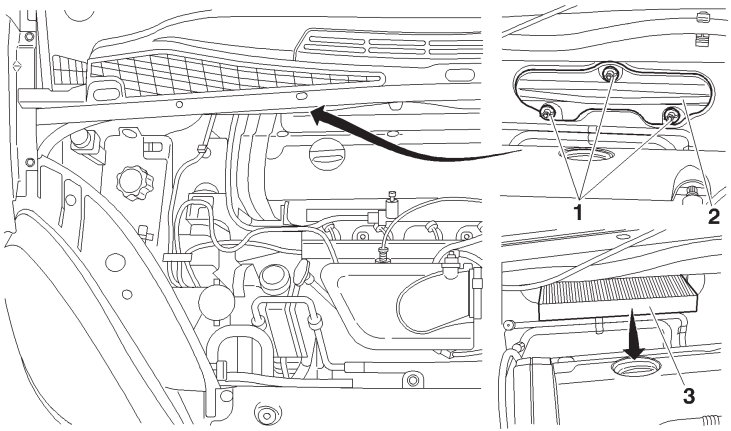


B1BP23ED

**Remove:**

- The three screws **(1)**.

- The cover **(2)**.

Remove the pollen filter.

## Changing the filtering/drying cartridge

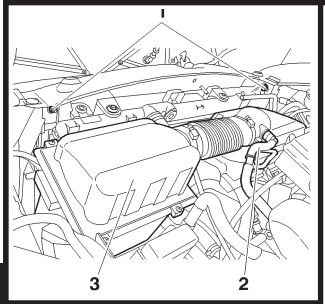


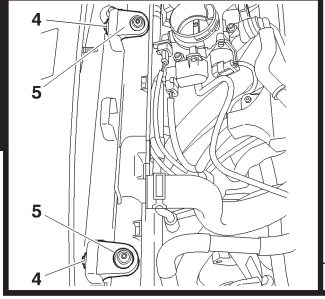


**Tools.**

**[1]** Charge station : *(according to workshop equipment)*
**[2]** TORX adaptor **: TORX 70 FACOM**

**Removing.**

Depressurise the aircon circuit, using tool **[1]**.

Uncouple the hose **(2)**.

Remove:
- The air filter assembly **(3)**.
- The nuts **(1)**.

Protect the radiator harness with strong cardboard cut to the dimensions of the radiator.
Move aside the cooling fan.

Remove:
- The screws **(4)**.
- The brackets **(5)**.

| B1BP23FC | B1BP23GC |
|---|---|

## Changing the filtering/drying cartridge

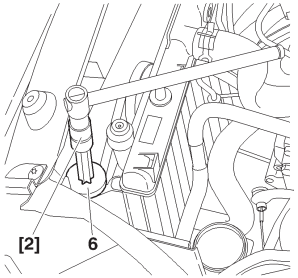


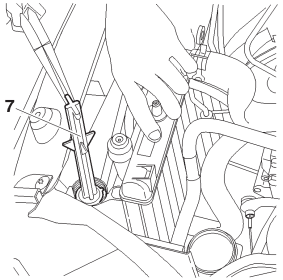


Move aside the radiator/condenser assembly.
Remove the plug **(6)**, using tool **[2]**.
Support the radiator/condenser assembly thus moved aside.
Remove the filtering/drying cartridge **(7)**, using pliers.

**Refitting.**
Refit the filtering/drying cartridge **(7)**.
Clean the threads of the plug **(6)**.
It is essntial to change the O-ring seals **(8)**.
Lubricate the O-ring seals **(8)** with aircon compressor oil.

Refit:
- The plug **(6)**, using tool **[2]**, tighten to **1,4 ± 0,2 m.daN**.
- The brackets **(5)**.
- The screws **(4)**.
- The cardboard from the radiator harness.
- The nuts **(1)**.
- The air filter assembly **(3)**.

Couple the hose **(2)**.
Recharge the circuit *(R134.a) (according to equipment) (see corresponding operation)*.
Check the operation of the air conditioning.

C5HP14NC | C5HP14PC | C5HP14QC

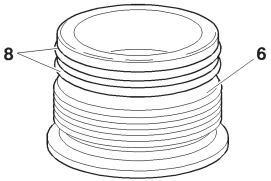

## SPECIAL FEATURES: AIR CONDITIONING SYSTEM (R 134.a)

### Compressor lubricant

**ESSENTIAL: The compressor lubricant is extremely hygroscopic; always use FRESH oil.**

### Checking the compressor oil level

**There are three specific cases:**
**1/** Repairs to a system without leaks.
**2/** Slow leak.
**3/** Fast leak.

**1/ Repairing a system without leaks.**

**a) Using draining/recovery equipment not fitted with an oil decanter.**
- Drain the system as slowly as possible via the **LOW PRESSURE** valve, so as not to lose any oil.
- No more oil should be added when filling the system with **R 134.a** fluid.

**b) Using draining/filling equipment fitted with an oil decanter.**
- Drain the **R 134.a** fluid from the system in accordance with the instructions in the equipment handbook.
- Measure the amount of oil recovered.
- Add the same amount of **NEW** oil when filling the system with **R 134.a** fluid.

**c) Replacing a compressor.**
- Remove the old compressor, drain it and measure the oil quantity.
- Drain the new compressor *(supplied full)*, so that the same amount of **NEW** oil is left in the compressor as was in the old compressor.
- No more oil should be added when filling the system with **R 134.a** fluid.

## Checking the compressor oil level (Continued)

**2/ Slow leak.**

- Slow leaks do not lead to oil loss, therefore the same procedure should be followed as if there was no leak at all.

**3/ Fast leak.**

This type of leak causes both oil loss as well as allowing air to enter the system.

It is therefore necessary to:

- Replace the dehydrator.
- Drain as much oil as possible *(when replacing the faulty component)*.

Either before or during filling of the system with **R 134.a** fluid, introduce **80 cc** of **NEW** oil into the system.

## Testing procedure

**Conditions inside the vehicle.**

Positions of the air conditioning controls:

Maximum cold.
Maximum blower power.
Air distribution on **«ventilation»** with the air vents open.
Position the air inlet flap to outside air.

**WARNING:** For **RFTA (1)**, disconnect the air inlet motor connector, first ensuring that it is in the outside air position.
**(1) RFTA** = Fully automatic air conditioning.

**Test procedure.**

When all these conditions are met, proceed in the following order:
- Measure the temperature in the workshop approx. one metre in front of the vehicle's air inlet grille.
- Start the engine *(without the air conditioning, or the blower, operating)* and wait for the cooling fan slow speed to trigger *(should the engine temperature not rise sufficiently, it is permissable to increase the engine speed to 2000 rpm).*
- Once it is sufficiently hot in the engine compartment, return the engine to idle and commence the test.

Switch on the air conditioning and adjust the engine speed to **2500 rp**m. In an ambient temperature of **40°C**, the engine speed will be brought down to **2000 rpm**, in order for the pressure safety threshold to cut off the compressor.

For further temperatures/pressures: see Tables and Graphs on following pages **221**, **222** and **226**.

After **3 minutes** of operation, note down the following 3 parameters:
- The temperature of the blown air coming out of the 2 central air vents *(take the average)*.
- The high pressure, via the intermediary of the clickfit union *(at the pressure reducer inlet)*.
- The low pressure, via the intermediary of the clickfit union *(at the pressure reducer outlet)*.

**NOTE:** The low and high pressures are absolute pressures.
When measuring the blown air temperatures, avoid any contact between the thermocouple and the air vents.

At the conclusion of the test involving vehicles with **«RFTA»**, do not forget to reconnect the air inlet motor connector.

## CHECKING TEMPERATURES (Continued)

| | | | Vehicle using R134.a fluid *(Compressor with variable capacity)* | | | | | |
|---|---|---|---|---|---|---|---|---|
| | Ambient temperature in °C | | 40 | 35 | 30 | 25 | 20 | 15 |
| Temperature at the central air vents in °C | Vehicle | Engines | | | | | | |
| | C3 C3 Pluriel | KFV | 22 ± 2 | 17,6 ± 2 | 14,4 ± 2 | 11,5 ± 2 | 7,6 ± 2 | 7,2 ± 2 |
| | | NFU | 18,5 ± 2 | 15 ± 2 | 12,5 ± 2 | 10 ± 2 | 8,5 ± 2 | 6,5 ± 2 |
| | | 8HX - 8HW | 22 ± 2 | 17,6 ± 2 | 14,4 ± 2 | 11,5 ± 2 | 7,6 ± 2 | 7,2 ± 2 |
| | XSARA | TU | 18 ± 2 | 17 ± 2 | 14,5 ± 2 | 11 ± 2 | 8,5 ± 2 | 8 ± 2 |
| | | EW | 19 ± 2 | 18 ± 2 | 15 ± 2 | 12 ± 2 | 10 ± 2 | |
| | | DW | 15 ± 2 | 15,5 ± 2 | 11 ± 2 | 9 ± 2 | 7 ± 2 | 5 ± 2 |
| | XSARA PICASSO | All types | 22 ± 3 | 16 ± 3 | 12,5 ± 3 | 10 ± 3 | 8 ± 3 | 6,5 ± 3 |

## Checking pressures

**Tools.** **- 1** charging station. **- 2** thermometers.

Once the preliminary conditions, vehicle equipment and checks have been fulfilled *(see table)*. After the air conditioning has been on for three minutes, record the following parameters:

- The temperature of the air coming from the central vents *(see table)*.
- The High Pressure.
- The Low Pressure.

Compare the values recorded with the table below, or the graphs.

| | | | Vehicle using R134.a fluid *(Compressor with variable capacity)* | | | | | |
|---|---|---|---|---|---|---|---|---|
| **Ambient temperature in °C** | | | **40** | **35** | **30** | **25** | **20** | **15** |
| | **Vehicles** | **Engines** | | | | | | |
| **High pressure (Bars)** | **C3** | **KFV** | 26 ± 2 | 23,2 ± 2 | 21 ± 2 | 19,2 ± 2 | 15,3 ± 2 | 15 ± 2 |
| **Low pressure (Bars)** | | | 4,3 ± 2 | 3,4 ± 2 | 3,1 ± 2 | 2,8 ± 2 | 2,7 ± 2 | |
| **High pressure (Bars)** | **C3 C3 Pluriel** | **NFU** | 25,2 ± 2 | 23,6 ± 2 | 21,4 ± 2 | 20 ± 2 | 17,6 ± 2 | 14,5 ± 2 |
| **Low pressure (Bars)** | | | 3,5 ± 2 | 3 ± 2 | 2,8 ± 2 | 2,5 ± 2 | 2,4 ± 2 | |
| **High pressure (Bars)** | | **8HX - 8HW** | 26,2 ± 2 | 23,2 ± 2 | 21 ± 2 | 19,2 ± 2 | 15,3 ± 2 | 15 ± 2 |
| **Low pressure (Bars)** | | | 4,3 ± 2 | 3,4 ± 2 | 3,1 ± 2 | 2,8 ± 2 | 2,7 ± 2 | |

# CHECKING THE EFFICIENCY OF THE AIR CONDITIONING SYSTEM | XSARA - XSARA PICASSO

## Checking pressures

**Tools.** **- 1** charging station. **- 2** thermometers.

Once the preliminary conditions, vehicle equipment and checks have been fulfilled *(see table)*. After the air conditioning has been on for three minutes, record the following parameters:

- The temperature of the air coming from the central vents *(see table)*.
- The High Pressure. - The Low Pressure.

Compare the values recorded with the table below, or the graphs.

| | | | Vehicle using R134.a fluid *(Compressor with variable capacity)* | | | | | |
|---|---|---|---|---|---|---|---|---|
| **Ambient temperature in °C** | | | **40** | **35** | **30** | **25** | **20** | **15** |
| | **Vehicles** | **Engines** | | | | | | |
| **High pressure (Bars)** | **XSARA** | **TU** | 23 ± 2 | 22,5 ± 2 | 20 ± 2 | 17 ± 2 | 15,5 ± 2 | 14,5 ± 2 |
| **Low pressure (Bars)** | | | 3,8 ± 0,2 | 3,6 ± 0,2 | 3,5 ± 0,2 | 3,1 ± 0,2 | 3 ± 0,2 | 2,9 ± 0,2 |
| **High pressure (Bars)** | | **EW** | 24,5 ± 2 | | 21,5 ± 2 | 18,5 ± 2 | 17 ± 2 | 15,5 ± 2 |
| **Low pressure (Bars)** | | | 4 ± 0,2 | 3,8 ± 0,2 | 3,5 ± 0,2 | 3,2 ± 0,2 | 3 ± 0,2 | |
| **High pressure (Bars)** | | **DW** | 21,5 ± 2 | 22,5 ± 2 | 20 ± 2 | 18 ± 2 | 16,5 ± 2 | 15,6 ± 2 |
| **Low pressure (Bars)** | | | 3,2 ± 0,2 | 3,3 ± 0,2 | 3 ± 0,2 | 2,8 ± 0,2 | 2,6 ± 0,2 | |
| **High pressure (Bars)** | **XSARA PICASSO** | **TU EW** | 25,5 ± 3 | 20,5 ± 3 | 18 ± 3 | 20 ± 3 | 13,5 ± 3 | 11 ± 3 |
| **Low pressure (Bars)** | | | 4 ± 0,3 | 3,5 ± 0,3 | 3 ± 0,3 | | | |
| **High pressure (Bars)** | | **DW** | 25 ± 3 | 22,5 ± 3 | 20 ± 3 | | 17 ± 3 | 15 ± 3 |
| **Low pressure (Bars)** | | | 4 ± 0,3 | 3,5 ± 0,3 | 3 ± 0,3 | | | |

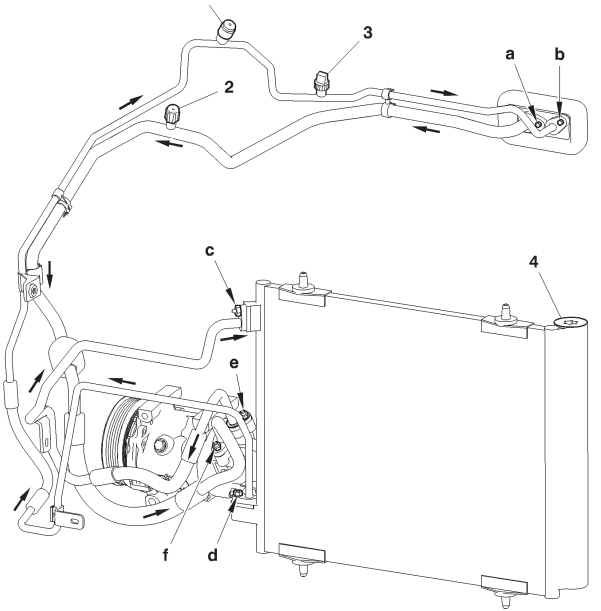


C5HP19UP

**(1)** High pressure valve.

**(2)** Low pressure valve.

**(3)** Pressostat.

**(4)** Filter.

**Tightening torques (m.daN).**

| | |
|---|---|
| **(a)** | **: 0,6** |
| **(b)** | **: 0,6** |
| **(c)** | **: 0,6** |
| **(d)** | **: 0,6** |
| **(e)** | **: 0,6** |
| **(f)** | **: 0,7** |

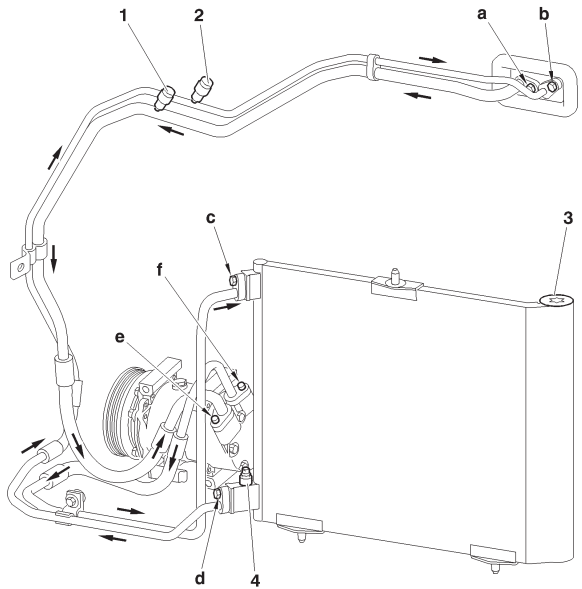


C5HP17SP

**(1)** High pressure valve.

**(2)** Low pressure valve.

**(3)** Filter.

**(4)** Pressostat.

**Tightening torques (m.daN).**

| | |
|---|---|
| **(a)** | **: 0,6** |
| **(b)** | **: 0,6** |
| **(c)** | **: 0,6** |
| **(d)** | **: 0,6** |
| **(e)** | **: 0,6** |
| **(f)** | **: 0,6** |

## Checks on the air conditioning circuit

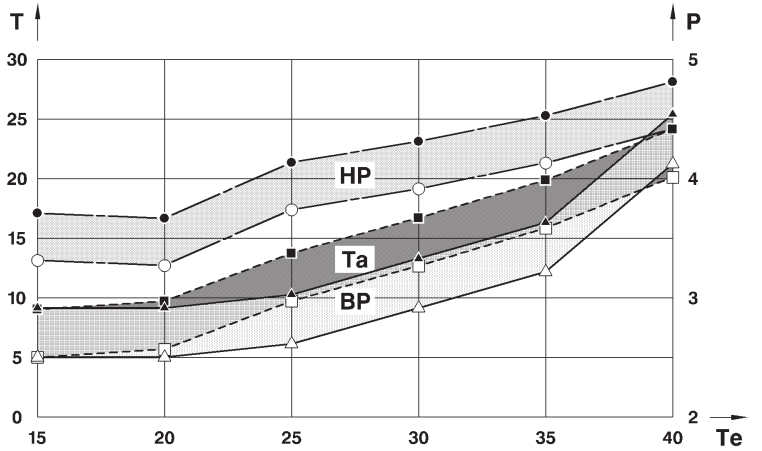


C5HP1A5D

**Key.**

**T/P** = Average temperature **(°C)** at the air vents/ high pressure **(Bars)**.

**P** = Low pressure **(Bars)**.

**Te** = Exterior temperature **(C°)**.

**HP** = Pressure at compressor outlet **(Bars)**.

**BP** = Pressure at compressor inlet **(Bars)**.

**TA** = Average temperature **(°C)** of air blown from the central vents.

## Checks on the air conditioning circuit

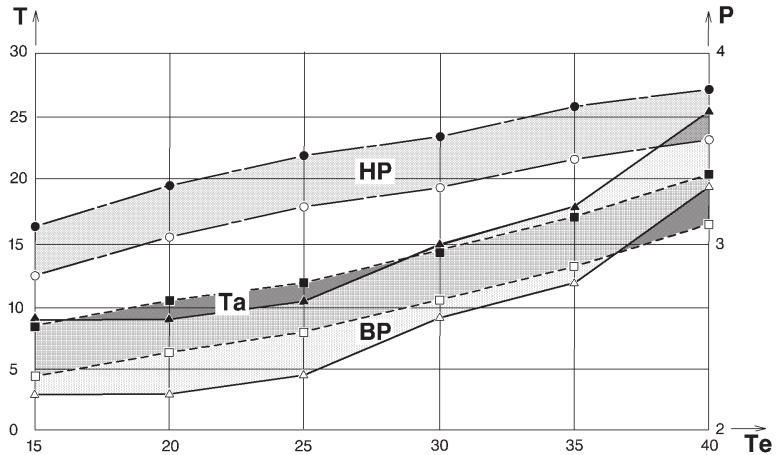


C5HP18GD

**Key.**

**T/P** = Average temperature **(°C )** at the air vents/ high pressure **(Bars)**.

**P** = Low pressure **(Bars)**.

**TE** = Exterior temperature **(C°)**.

**HP** = Pressure at compressor outlet **(Bars)**.

**BP** = Pressure at compressor inlet **(Bars)**.

**TA** = Average temperature **(°C)** of air blown from the central vents.

## Checks on the air conditioning circuit

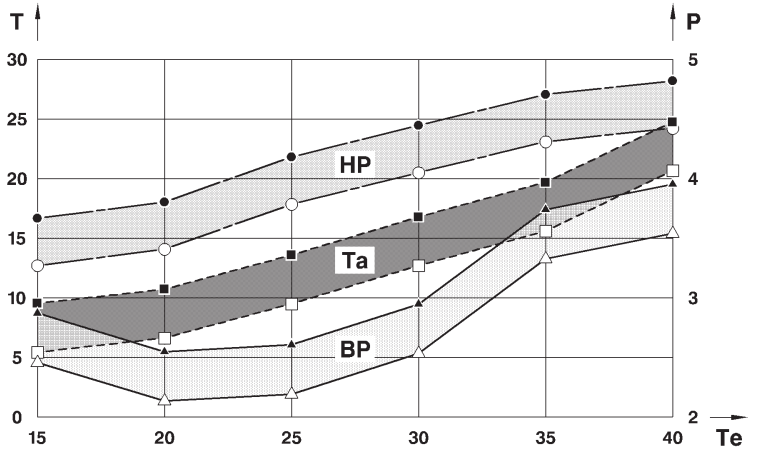


C5HP1A8D

**Key.**

**T/P** = Average temperature **(°C )** at the air vents/ high pressure **(Bars).**

**P** = Low pressure **(Bars)**.

**TE** = Exterior temperature **(C°)**.

**HP** = Pressure at compressor outlet **(Bars)**.

**BP** = Pressure at compressor inlet **(Bars)**.

**TA** = Average temperature **(°C)** of air blown from the central vents.

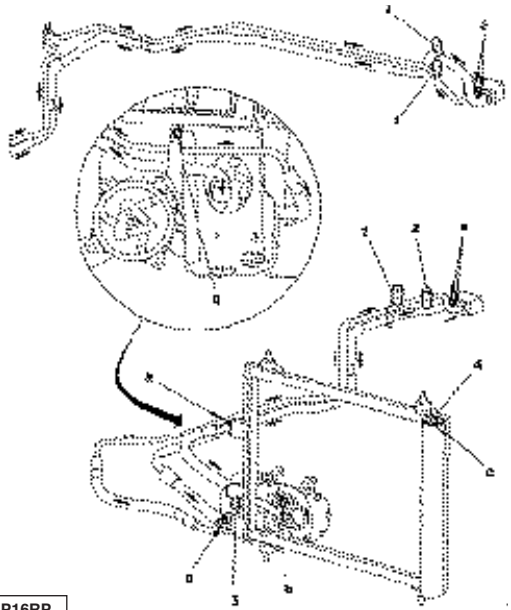

C5HP16RP

**Plan of air conditioning system.**

**Two solutions:**

**1/ «MANULLI»**, with **«NON EUROCLIM»** compressor *(O-ring seals)*.

2/ **«EATON»**, with **«EUROCLIM»** compressor *(quadrilobe seals)*.

**(1)** High pressure valve.
**(2)** Low pressure valve.
**(3)** Pressostat.
**(4)** Dryer.

**Tightening torques (m.daN).**

| | |
|---|---|
| **(a)** | **: 0,8** |
| **(b)** | **: 4 ± 0,4** |
| **(c)** | **: 0,8** |

**A** Right hand drive.

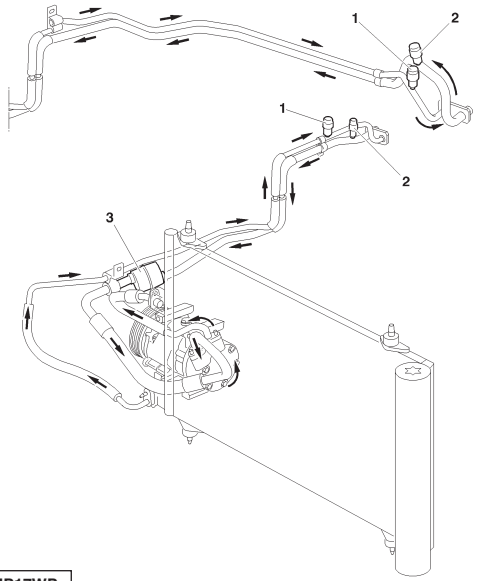


C5HP17WP

**Plan of air conditioning system.**

**Solution:**

**1/** **«EATON»**, with **«EUROCLIM»** compressor and buffer capacity *(quadrilobe seals)*.

**(1)** High pressure valve.
**(2)** Low pressure valve.
**(3)** Buffer capacity.

**Tightening torques (m.daN).**

| | |
|---|---|
| **(a)** | **: 0,8** |
| **(b)** | **: 4 ± 0,4** |
| **(c)** | **: 0,8** |

**A** Right hand drive.

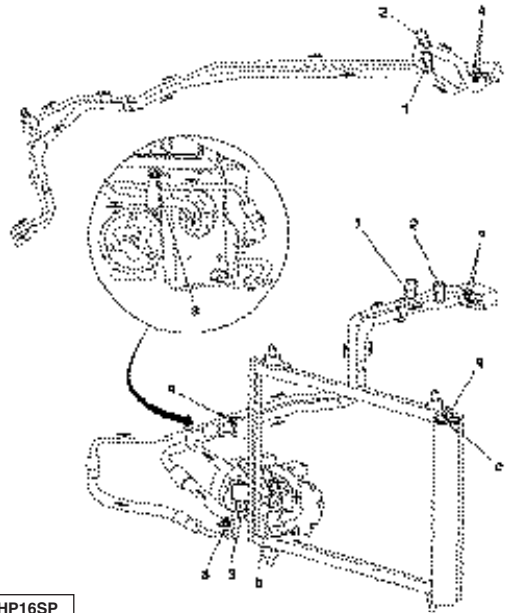

C5HP16SP

**Plan of air conditioning system.**

**Two solutions :**

**1/ «MANULLI»**, with **«NON EUROCLIM»** compressor *(O-ring seals)*.

**2/ «EATON»**, with **«EUROCLIM»** compressor *(quadrilobe seals)*.

**(1)** High pressure valve.
**(2)** Low pressure valve.
**(3)** Pressostat.
**(4)** Dryer.

**Tightening torques (m.daN).**

| | |
|---|---|
| **(a)** | **: 0,8** |
| **(b)** | **: 4 ± 0,4** |
| **(c)** | **: 0,8** |

**A** Right hand drive.


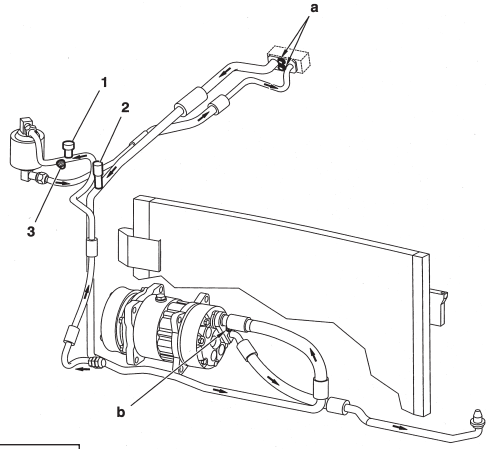


C5HP16VP

**Plan of air conditioning system.**

**Two solutions:**

**1/ «MANULLI»**, with **«NON EUROCLIM»** compressor *(O-ring seals)*.

**2/ «EATON»**, with **«EUROCLIM»** compressor *(quadrilobe seals)*.

**(1)** High pressure valve.
**(2)** Low pressure valve.
**(3)** Pressostat.
**(4)** Dryer.

**Tightening torques (m.daN).**

| | |
|---|---|
| **(a)** | **: 0,8** |
| **(b)** | **: 4 ± 0,4** |
| **(c)** | **: 0,8** |

**A** Right hand drive.

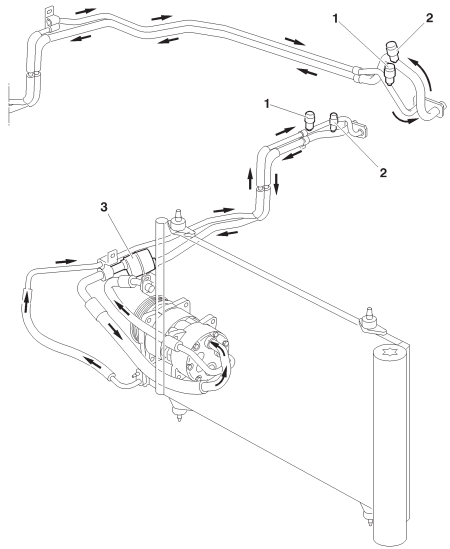


C5HP17XP

**Plan of air conditioning system.**

**Three solutions:**

**1) «MANULLI»**, with **«NON EUROCLIM»** compressor *(O-ring seals)*.

**2) «EATON»**, with **«EUROCLIM»** compressor and buffer capacity *(quadrilobe seals)*.

**3) «EATON»**, with **«NON EUROCLIM»** compressor and buffer capacity *(O-ring seals)*.

**(1)** High pressure valve.
**(2)** Low pressure valve.
**(3)** Buffer capacity.

**Tightening torques (m.daN).**

| | |
|---|---|
| **(a)** | **: 0,8** |
| **(b)** | **: 4 ± 0,4** |
| **(c)** | **: 0,8** |

**A** Right hand drive.

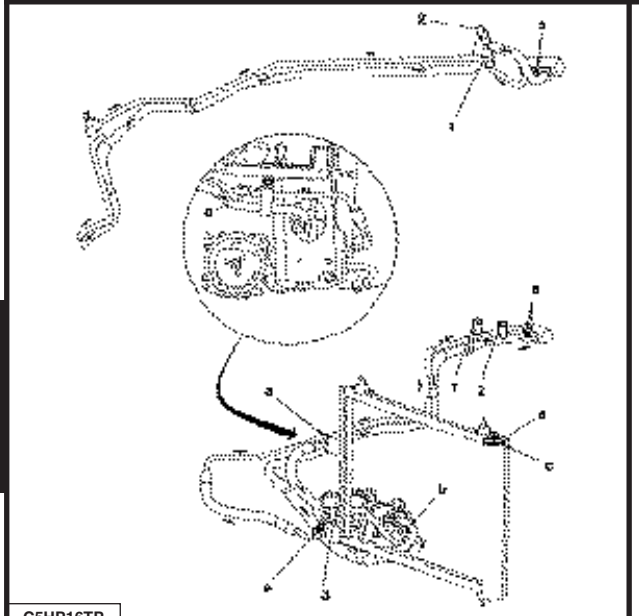

C5HP16TP

**Plan of air conditioning system.**

**Two solutions:**

**1/ «MANULLI»**, with **«NON EUROCLIM»** compressor *(O-ring seals)*.

**2/ «EATON»**, with **«EUROCLIM»** compressor *(quadrilobe seals)*.

**(1)** High pressure valve.
**(2)** Low pressure valve.
**(3)** Pressostat.
**(4)** Dryer.

**Tightening torques (m.daN).**

| | |
|---|---|
| **(a)** | **: 0,8** |
| **(b)** | **: 4 ± 0,4** |
| **(c)** | **: 0,8** |

**A** Right hand drive.

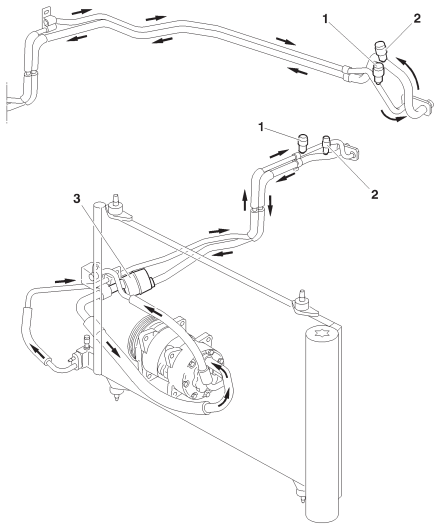


C5HP17YP

**Plan of air conditioning system.**

**Three solutions :**

**1)** **«MANULLI»**, with **«NON EUROCLIM»** compressor *(O-ring seals)*.
**2)** **«EATON»**, with **«EUROCLIM»** compressor and buffer capacity *(quadrilobe seals)*.
**3)** **«EATON»**, with **«NON EUROCLIM»** compressor and buffer capacity *(O-ring seals)*.

**(1)** High pressure valve
**(2)** Low pressure valve
**(3)** Buffer capacity.

**Tightening torques (m.daN).**

| | |
|---|---|
| **(a)** | **: 0,8** |
| **(b)** | **: 4 ± 0,4** |
| **(c)** | **: 0,8** |

**A** Right hand drive.

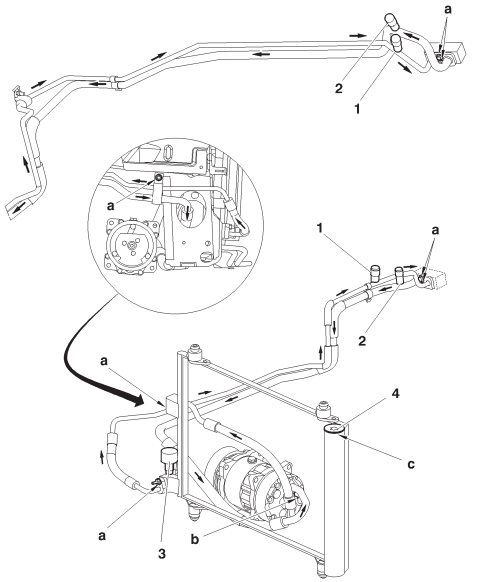


C5HP16UP

**Plan of air conditioning system.**

**Two solutions:**

**1/ «MANULLI»**, with **«NON EUROCLIM»** compressor *(O-ring seals)*.

**2/ «EATON»**, with **«EUROCLIM»** compressor *(quadrilobe seals)*.

**(1)** High pressure valve.
**(2)** Low pressure valve.
**(3)** Pressostat.
**(4)** Dryer.

**Tightening torques (m.daN).**

| | |
|---|---|
| **(a)** | **: 0,8** |
| **(b)** | **: 4 ± 0,4** |
| **(c)** | **: 0,8** |

**A** Right hand drive.

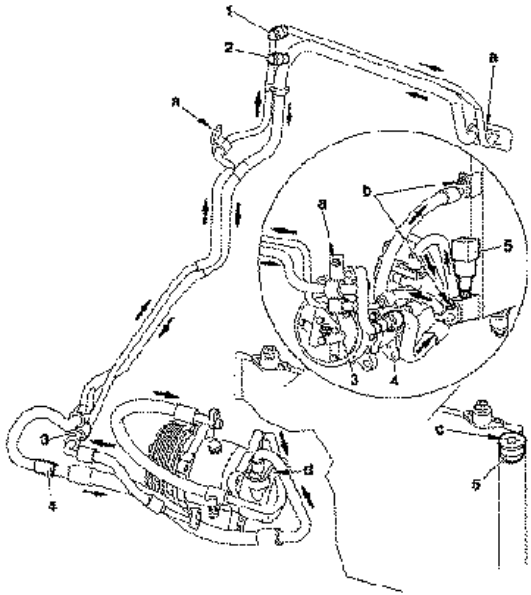


C5HP13PP

**(1)** High pressure valve
**(2)** Low pressure valve
**(3)** High pressure clickfit union *(tool **8005-T.C**)*
**(4)** Low pressure clickfit union *(tool **8005-T.A**)*
**(5)** Pressostat. **: 1,8 ± 0,6 m.daN**
**(6)** Filtering/drying cartridge plug

**Tightening torques (m.daN).**

| | |
|---|---|
| **(a)** | **: 0,8.± 0,1** |
| **(b)** | **: 0,5.± 0,1** |
| **(c)** | **: 1,4 ± 0,2** |
| **(d)** | **: 2,5 ± 0,25** |

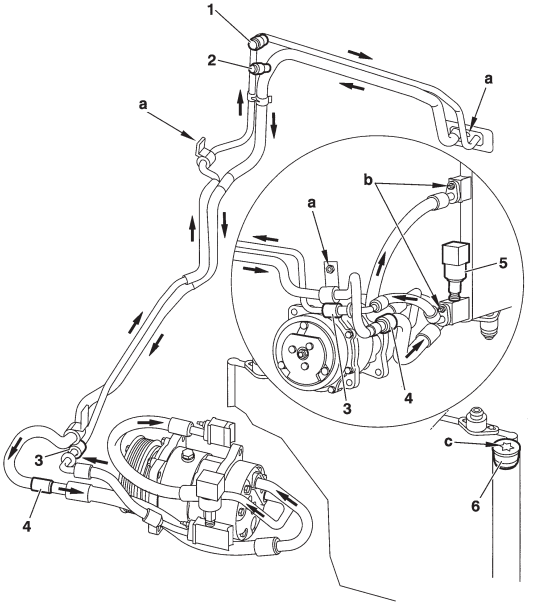


C5HP13QP

**(1)** High pressure valve
**(2)** Low pressure valve
**(3)** High pressure clickfit union *(tool **8005-T.C**)*
**(4)** Low pressure clickfit union *(tool **8005-T.A**)*
**(5)** Pressostat **: 1,8 ± 0,6 m.daN**
**(6)** Filtering/drying cartridge plug

**Tightening torques (m.daN).**

| | |
|---|---|
| **(a)** | **: 0,8.± 0,1** |
| **(b)** | **: 0,5.± 0,1** |
| **(c)** | **: 1,4 ± 0,2** |
| **HP/LP** compressor flange fixing | **: 2,5 ± 0,25** |

## Checks on the air conditioning circuit

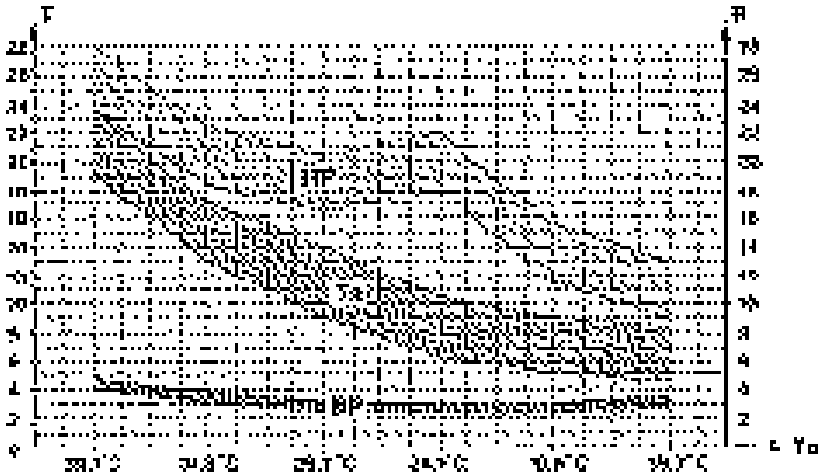


C5HP150D

**Key.**

**T/P** = Scale of:
- Temperature **(°C )**, average of air from the central vents.
- Pressure High **(Bars)**.
- Pressure Low **(Bars)**.

**Te** = Exterior temperature **(°C)**.

**HP** = Pressure at compressor outlet **(Bars)**.

**Ta** = Temperature **(°C)** of air blown from the vents.

**BP** = Pressure at compressor inlet **(Bars)**.

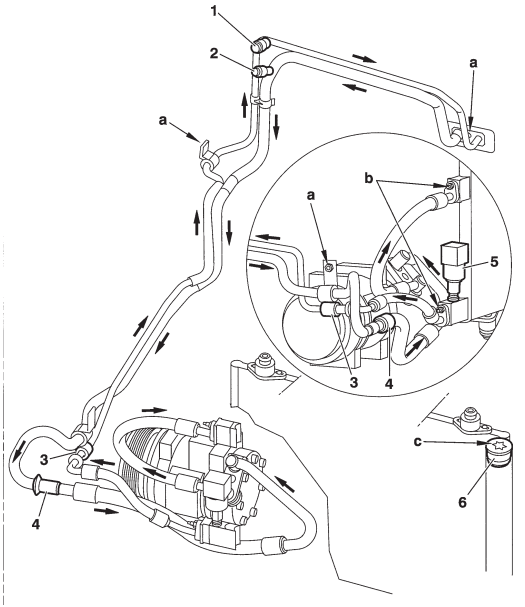


C5HP13RP

**(1)** High pressure valve
**(2)** Low pressure valve
**(3)** High pressure clickfit union *(tool **8005-T.C**)*
**(4)** Low pressure clickfit union *(tool **8005-T.A**)*
**(5)** Pressostat **: 1,8 ± 0,6 m.daN**
**(6)** Filtering/drying cartridge plug

**Tightening torques (m.daN).**

| | |
|---|---|
| **(a)** | **: 0,8.± 0,1** |
| **(b)** | **: 0,5.± 0,1** |
| **(c)** | **: 1,4 ± 0,2** |
| **HP/LP** compressor flange fixing | **: 4,2 ± 0,15** |

## Checks on the air conditioning circuit

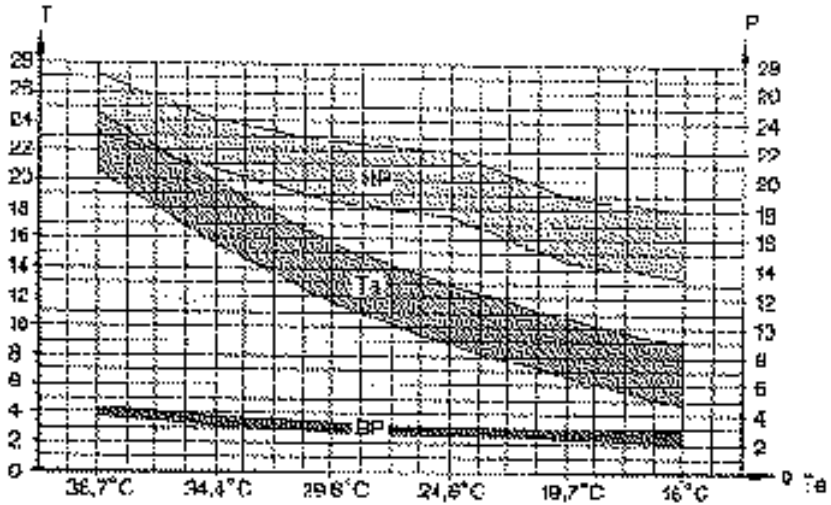


C5HP14ZD

**Key.**

**T/P** = Scale of:
- Temperature **(°C )**, average of air from the central vents.
- Pressure High **(Bars)**.
- Pressure Low **(Bars)**.

**Te** = Exterior temperature **(°C)**.

**HP** = Pressure at compressor outlet **(Bars)**.

**Ta** = Temperature **(°C)** of air blown from the vents.

**BP** = Pressure at compressor inlet **(Bars)**.