A Star for Christmas

Design by A. Rossius

This circuit acts as a simple light effects generator. With the LEDs suitably arranged, it will produce the impression of a star and so makes an ideal Christmas ornament or decorative element. As you can see from the board layout, the LEDs have been arranged in the shape of a star.

The first LED to light is the centre one. Then follow the LEDs in the inner ring (D3-D19), followed by the next ring, and so on, right up to the outer ring (D43-D50). The sequence is then started again. The speed of the light effect depends on the setting of P1.

The operation of the circuit is just as sample as the light effect produced. A 555-based timer is configured as an astable multivibrator clocking a decimal counter (IC2). After a reset, output Q0 is activated. The next output on the counter, Q1, is activated on the next clock pulse, and so on. The counter outputs control the LEDs via buffer transistors. The seventh clock pulse causes a reset pulse and so forces the counting to start at Q0 again.

Apart from a functional circuit, an all-electronic Christmas decoration requires a suitable overall design. That's why we've designed a PCB layout with the LEDs suitably arranged in straight lines.

(020040-1)

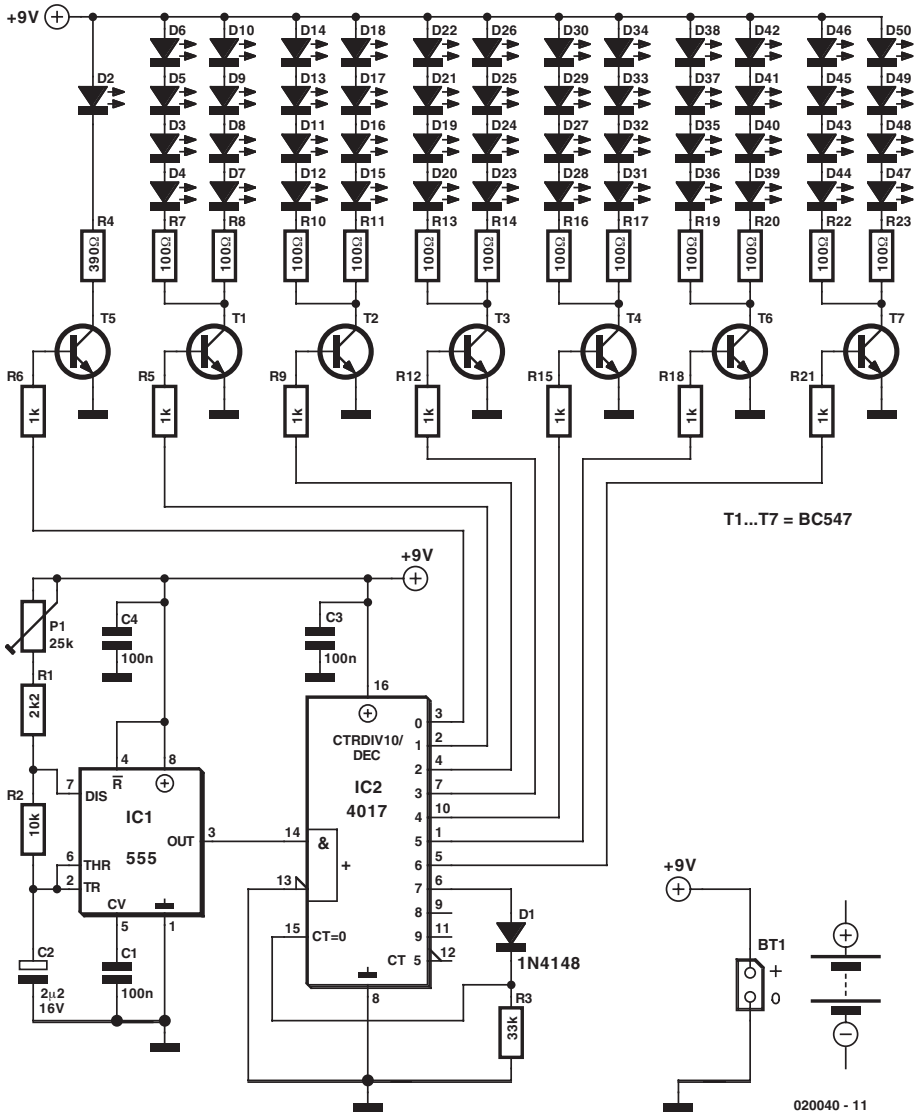

Figure 1.

COMPONENTS LIST

Resistors:

R1 = 2kΩ2
R2 = 10kΩ
R3 = 33kΩ
R4 = 390Ω
R5,R6,R9,R12,R15,R18,R21 = 1kΩ
R7,R8,R10,R11,R13,R14,R16,R17,R19,R20,R22,R23 = 100Ω
P1 = 25 kΩ preset

Capacitors:

C1,C3,C4 = 100nF
C2 = 2µF2 16V radial

Semiconductors:

D1 = 1N4148
D2-D50 = LED, red
T1-T7 = BC547
IC1 = 555
IC2 = 4017

Miscellaneous:

9V battery with clip-on connector

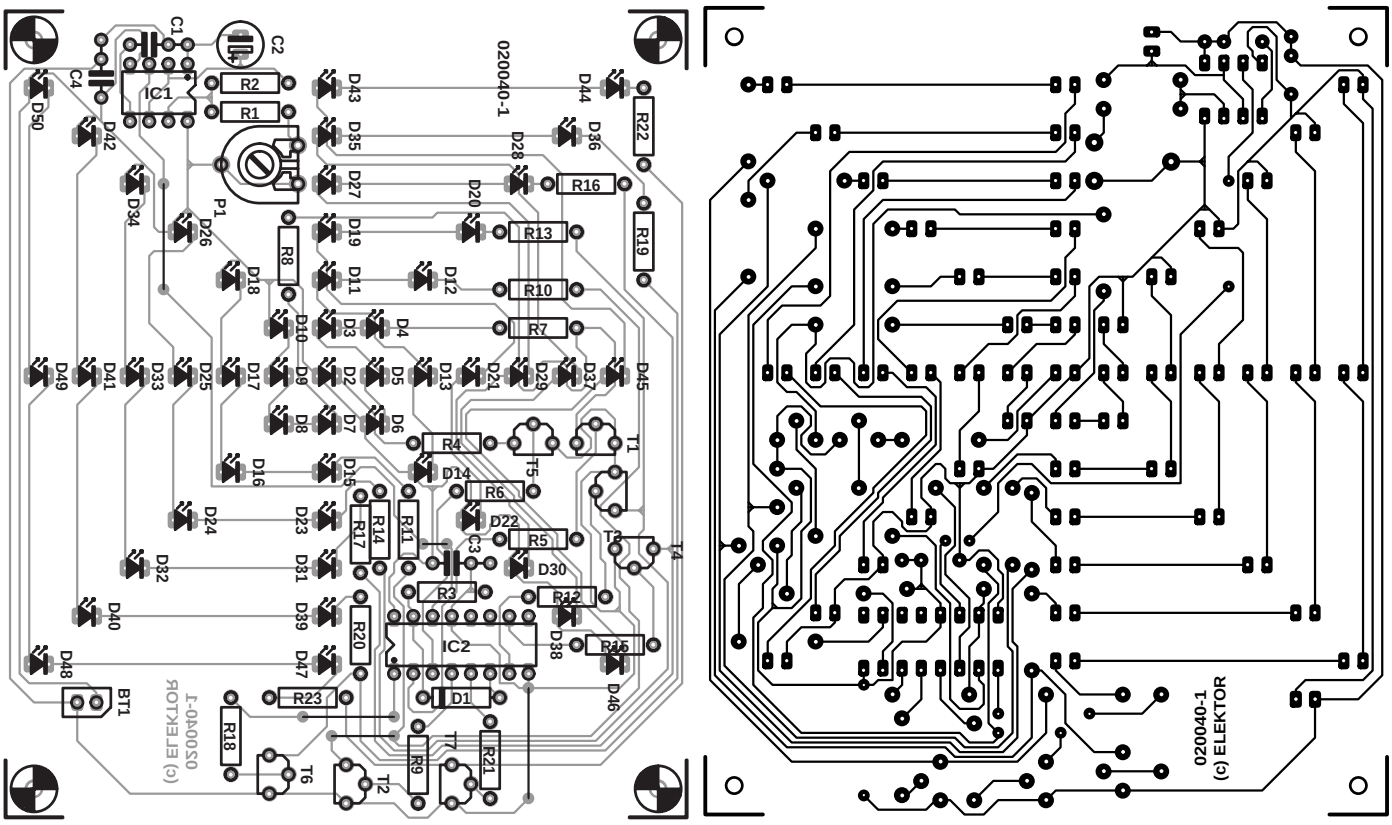
020040-1
(c) ELEKTOR
IC1
IC2
C1
C2
C3
C4
R1
R2
R3
R4
R5
R6
R7
R8
R9
R10
R11
R12
R13
R14
R15
R16
R17
R18
R19
R20
R21
R22
R23
P1
T1
T2
T3
T4
T5
T6
T7
D1
BT1

Figure 2.

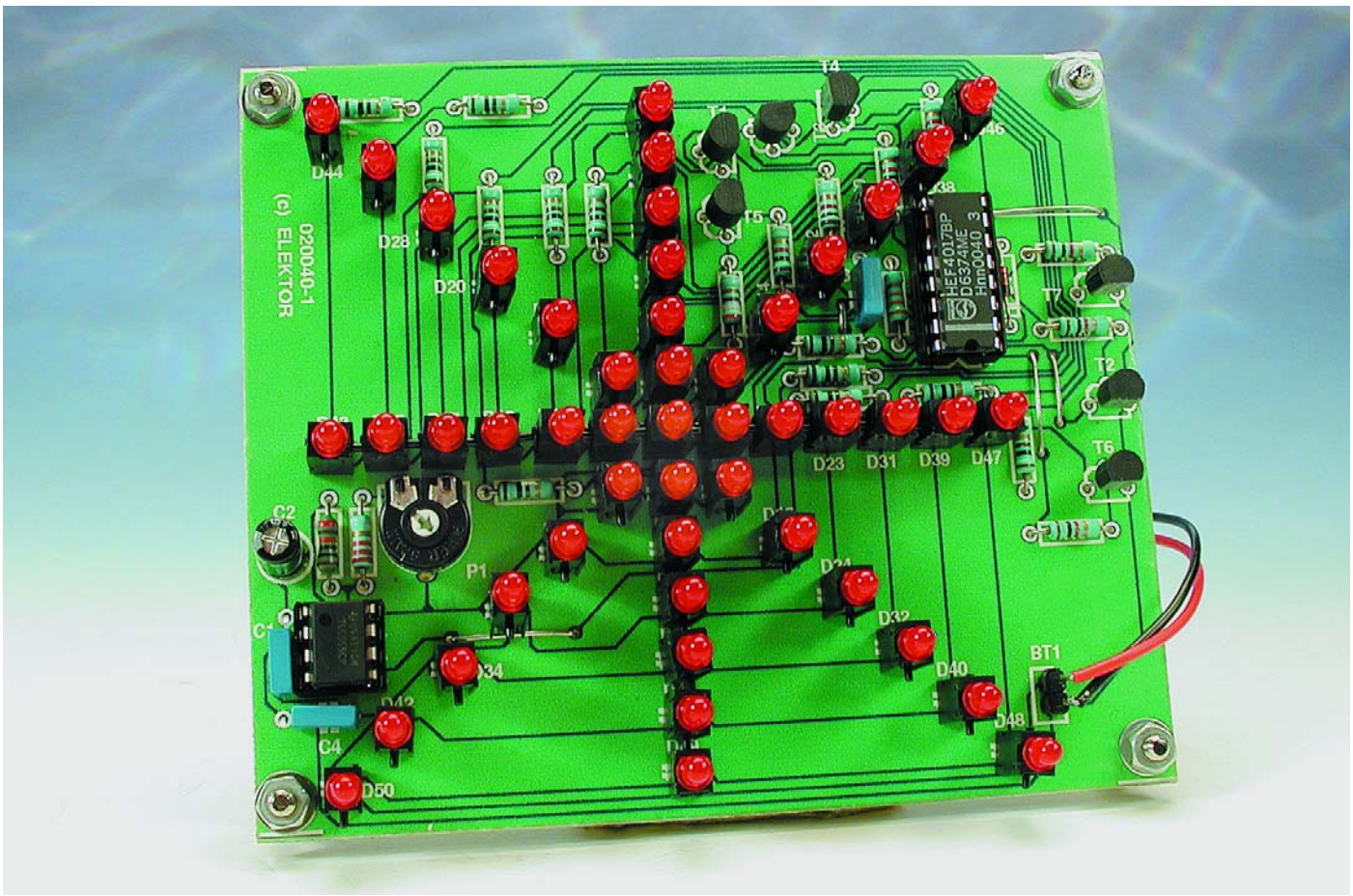
020040-1
(c) ELEKTOR
HEF4017BP
D6374ME
Hnn0040 3
D44
D28
D20
D23
D31
D39
D47
D32
D40
D48
D50
P1
C2
C4
BT1
T2
T6