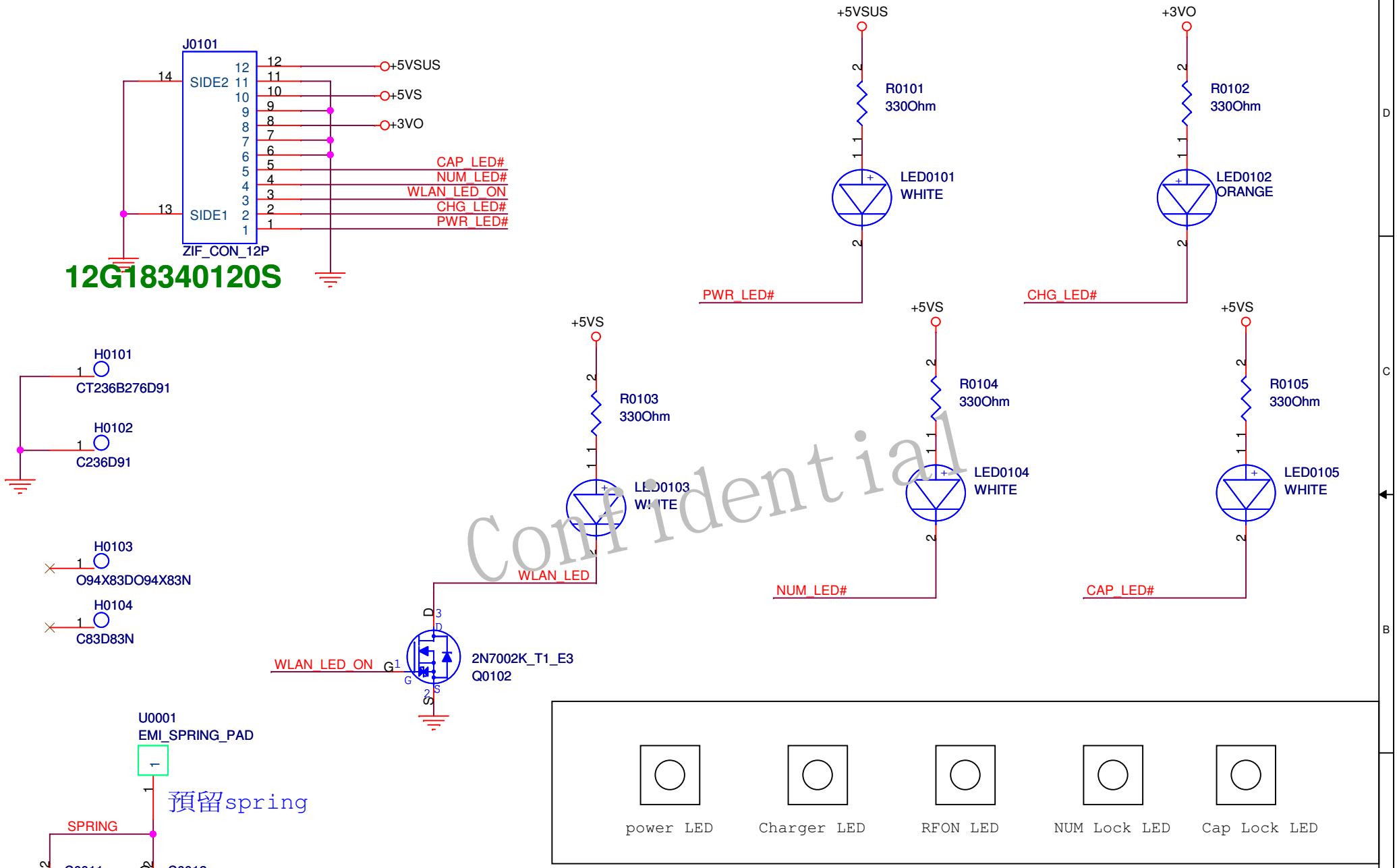

Confidential

ASUSTeK COMPUTER INC. NB1	Title : LED Board	
	Engineer:	
Size A	Project Name UX20_IO-BOARD	Rev 1.0A
Date: Wednesday, October 08, 2008	Sheet 1 of 1	