ORDER NO. MD0401032C2

Service Manual

CD Stereo System

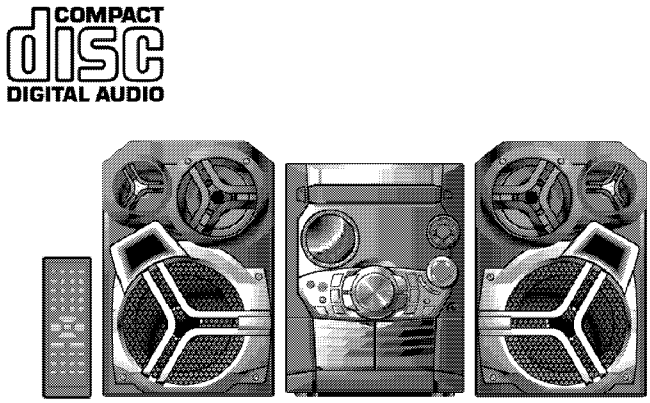

SA-AK320E
SA-AK320EB
SA-AK320EG

Colour

(K)... Black Type (For SA-AK320E & SA-AK320EG only)

(S)... Silver Type (For SA-AK320E, SA-AK320EB & SA-AK320EG only)

Specifications

■ AMPLIFIER SECTION

RMS Power output	
THD 10%, both channels driven	
1 kHz	
(Low channel)	75 W per channel (6 Ω)
10 kHz	
(High channel)	75 W per channel (6 Ω)
Total Bi-Amp power	150 W per channel
Input sensitivity	
AUX	250 mV
Input Impedance	
AUX	13.3 kΩ

■ FM TUNER SECTION

Frequency range	87.5 - 108.0 MHz (50 kHz steps)
Sensitivity	1.8μV (IHF)
S/N 26 dB	1.5 μV
Antenna terminal(s)	75 Ω (unbalanced)

■ AM TUNER SECTION

Frequency range	522 - 1629 kHz (9 kHz steps)
Sensitivity	
S/N 20 dB (at 999 kHz)	560 μV/m

■ CASSETTE DECK SECTION

Track system	4 track, 2 channel
Heads	
Record/playback	Solid permalloy head
Erasure	Double gap ferrite head
Motor	DC servo motor
Recording system	AC bias 100 kHz
Erasing system	AC erase 100 kHz
Tape speed	4.8 cm/s (1 7/8 ips)
Overall frequency response (+3 dB, -6 dB at DECK OUT)	
NORMAL (TYPE I)	35 Hz - 14 kHz
S/N	50 dB (A weighted)
Wow and flutter	0.18 % (WRMS)
Fast forward and rewind time	Approx. 120 seconds with C-60 cassette tape

■ CD SECTION

Sampling frequency	44.1 kHz
Decoding	16 bit linear
Pickup	
Beam source/wavelength	Semiconductor laser/780 nm
Number of channels	Stereo
Frequency response	20 Hz - 20 kHz (+1, -2 dB)
Wow and flutter	Below measurable limit
Digital filter	8 fs
D/A converter	MASH (1 bit DAC)
MP3	
Bit rate	32 kbps - 320 kbps
Sampling frequency	32 kHz, 44.1 kHz, 48 kHz

■ GENERAL

Panasonic

© 2004 Panasonic AVC Networks Singapore Pte. Ltd. All rights reserved. Unauthorized copying and distribution is a violation of law.

Power Supply (For E, EG only)	AC 230V, 50Hz
Power Supply (For EB only)	AC 230 - 240 V, 50Hz
Power consumption	242 W
Power Consumption in standby mode	0.5 W
Dimensions (W x H x D)	250 x 330 x 366 mm
Mass	7.9 kg

■ **SYSTEM**

SC-AK320 (E)	Music center: SA-AK320 (E)
	Speaker: SB-AK320 (GC)
SC-AK320 (EB)	Music center: SA-AK320 (EB)
	Speaker: SB-AK320 (GC)
SC-AK320 (EG)	Music center: SA-AK320 (EG)
	Speaker: SB-AK320 (EG)

Notes:

1. Specifications are subject to change without notice. Mass and dimensions are approximate.
2. Total harmonic distortion is measured by the digital spectrum analyzer.
3. The labels "HIGH" and "LOW" on the rear of the speakers refer to High frequency and Low frequency.

⚠ WARNING

This service information is designed for experienced repair technicians only and is not designed for use by the general public.
It does not contain warnings or cautions to advise non-technical individuals of potential dangers in attempting to service a product.
Products powered by electricity should be serviced or repaired only by experienced professional technicians. Any attempt to service or repair the product or products dealt with in this service information by anyone else could result in serious injury or death.

CONTENTS

Page

1 Caution for AC Mains Lead ---- **4**
2 Before Repair and Adjustment ---- **5**
3 Protection Circuitry ---- **5**
4 Prevention of Electro Static Discharge (ESD) to Electrostatically Sensitive (ES) Devices ---- **5**
5 Handling the Lead-free Solder ---- **6**
5.1. About lead free solder (PbF) ---- 6
6 Handling Precautions For Traverse Deck ---- **7**
7 Precaution of Laser Diode ---- **8**
8 Accessories ---- **9**
9 Operation Procedures ---- **10**
10 Disassembly and Assembly of Main Component ---- **11**
10.1. Disassembly flow chart ---- 11
10.2. Disassembly of Top Cabinet and Rear Panel ---- 12
10.3. Disassembly of CD Mechanism Unit ---- 14
10.4. Disassembly Main P.C.B., Transformer P.C.B. & Power P.C.B. ---- 15
10.5. Disassembly of Panel P.C.B. & Tact Switch P.C.B. ---- 16
10.6. Disassembly of Deck Mechanism Unit & Deck P.C.B. ---- 17
10.7. CD Mechanism Main Component Replacement Procedures ---- 17
10.8. Replacement for the pinch roller ass'y and head block ---- 30
10.9. Replacement for the Deck motor ass'y, capstan belt A, capstan belt B and winding belt ---- 31
10.10. Replacement for the cassette lid ass'y ---- 34
10.11. Measure for tape trouble ---- 34
11 Service Position ---- **35**
11.1. Checking Procedure ---- 35
11.2. Checking the Main P.C.B., Power P.C.B. and Transformer P.C.B. ---- 35
11.3. Checking the Panel, Tact Switch, Deck & Deck Mechanism P.C.B. ---- 36
12 Description of Error Code ---- **37**

Page

12.1. Abnormality detection for Deck Mechanism block ---- 37
12.2. Abnormality detection for CD/Changer block ---- 37
12.3. Power Supply related error detection ---- 37
13 Self-Diagnostic Function ---- **38**
13.1. Self-diagnostic display ---- 38
13.2. How to enter the Self-Diagnostic Function ---- 38
13.3. Cassette Mechanism Test (For error code H01, H02, H03, F01, F02) ---- 38
13.4. CD Mechanism Test (F15, F26, F16, F17, F27, F28, F29, H15) ---- 39
13.5. To clear all Error code ---- 39
13.6. How to get out from Self-Diagnostic function ---- 39
13.7. Power Amplifier Failure (F61) ---- 39
14 CD Test Mode Function ---- **40**
14.1. How to set CD test mode ---- 40
14.2. CD Automatically Adjustment result indication ---- 40
15 Measurements and Adjustments ---- **41**
15.1. Cassette Deck Section ---- 41
15.2. Tuner Section ---- 41
15.3. Alignment Points ---- 42
16 Block Diagram ---- **43**
17 Schematic Diagram ---- **50**
17.1. (A) CD Servo Circuit ---- 51
17.2. (B) Tuner/Main Circuit ---- 53
17.3. (B) Main Circuit ---- 54
17.4. (C) Panel Circuit & (D) Tact Switch Circuit ---- 59
17.5. (E) Transformer Circuit, (F) CD Detect Circuit, (G) Spindle Position Circuit & (H) CD Loading Circuit ---- 61
17.6. (I) Power Circuit ---- 62
17.7. (J) Deck Circuit & (K) Mechanism Circuit ---- 63
18 Printed Circuit Board ---- **65**
18.1. (A) CD Servo P.C.B. ---- 65
18.2. (B) Main/ Tuner P.C.B. ---- 67

18.3. (C) Panel P.C.B. ---- 69
18.4. (D) Tact Switch P.C.B. ---- 71
18.5. (E) Transformer P.C.B. ---- 72
18.6. (F) CD Detect P.C.B., (G) Spindle Position P.C.B. and (H) CD Loading P.C.B. ---- 73
18.7. (I) Power P.C.B. ---- 74
18.8. (J) Deck P.C.B. & (K) Deck Mechanism P.C.B. ---- 76
19 Wiring Connection Diagram ---- 77
20 Illustration of IC's, Transistors and Diodes ---- 78
21 Terminal Function of IC's ---- 79
21.1. IC701 (AN22004A-NF) Head Amplifier ---- 79
21.2. IC702 (MN6627934CH) Servo Processor/ Digital Signal Processor/ Digital Filter/ D/A Converter ---- 79
21.3. IC703 (AN8739SBTE2) Focus Coil/ Tracking Coil/ Traverse Motor/ Spindle Motor Driver ---- 80
21.4. IC305 (C2CBJF000014) System Microprocessor ---- 80
22 Troubleshooting Guide ---- 82
23 Parts Location and Replacement Parts List ---- 83
23.1. Deck Mechanism (RAA4502-S) ---- 84
23.2. CD Loading Mechanism (RD-DAC026-S) ---- 87
23.3. Cabinet ---- 90
23.4. Electrical Parts List ---- 93
23.5. Packing Materials & Accessories Parts List ---- 102
23.6. Packaging ---- 102

1 Caution for AC Mains Lead

(For "EB" area code model only.)

For your safety, please read the following text carefully.

This appliance is supplied with a moulded three pin mains plug for your safety and convenience.
A 5-ampere fuse is fitted in this plug.
Should the fuse need to be replaced please ensure that the replacement fuse has a rating of 5-ampere and that it is approved by ASTA or BSI to BS1362.

Check for the ASTA mark or the BSI mark on the body of the fuse.

If the plug contains a removable fuse cover you must ensure that it is refitted when the fuse is replaced.
If you lose the fuse cover, the plug must not be used until a replacement cover is obtained.
A replacement fuse cover can be purchased from your local dealer.

CAUTION!
IF THE FITTED MOULDED PLUG IS UNSUITABLE FOR THE SOCKET OUTLET IN YOUR HOME THEN THE FUSE SHOULD BE REMOVED AND THE PLUG CUT OFF AND DISPOSED OFF SAFELY.
THERE IS A DANGER OF SEVERE ELECTRICAL SHOCK IF THE CUT OFF PLUG IS INSERTED INTO ANY 13-AMPERE SOCKET.

If a new plug is to be fitted, please observe the wiring code as shown below.
If in any doubt please consult a qualified electrician.

IMPORTANT

The wires in this mains lead are coloured in accordance with the following code:

Blue: Neutral
Brown: Live

As these colours may not correspond with the coloured markings identifying the terminals in your plug, proceed as follows:
The wire which is coloured Blue must be connected to the terminal which is marked with the letter N or coloured Black or Blue.

The wire which is coloured Brown must be connected to the terminal which is marked with the letter L or coloured Brown or Red.

WARNING: DO NOT CONNECT EITHER WIRE TO THE EARTH TERMINAL WHICH IS MARKED WITH THE LETTER E, BY THE EARTH SYMBOL ⏚ OR COLOURED GREEN OR GREEN/YELLOW.

THIS PLUG IS NOT WATERPROOF—KEEP DRY.

Before use

Remove the connector cover.

How to replace the fuse

The location of the fuse differ according to the type of AC mains plug (figures A and B). Confirm the AC mains plug fitted and follow the instructions below.
Illustrations may differ from actual AC mains plug.

1. Open the fuse cover with a screwdriver.

Figure A

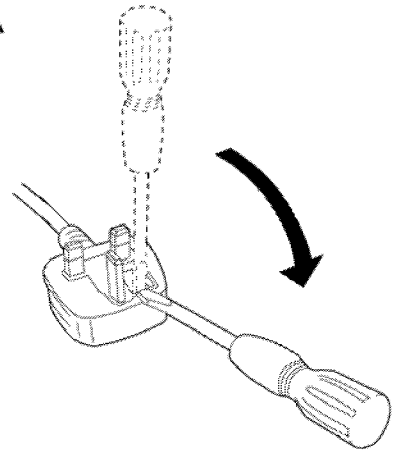

Figure B

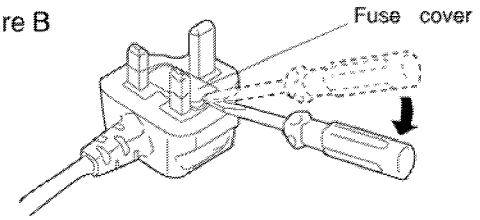

2. Replace the fuse and close or attach the fuse cover.

Figure A

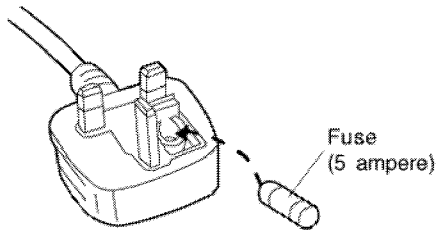

Figure B

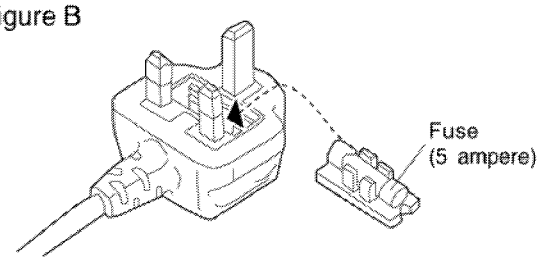

2 Before Repair and Adjustment

Disconnect AC power, discharge Power Supply Capacitors C520 and C540 through a 10Ω, 5W resistor to ground.
DO NOT SHORT-CIRCUIT DIRECTLY (with a screwdriver blade, for instance), as this may destroy solid state devices.
After repairs are completed, restore power gradually using a variac, to avoid overcurrent.

Current consumption at AC 230V, 50 Hz in NO SIGNAL mode (volume min at CD mode) should be ~350mA.

3 Protection Circuitry

The protection circuitry may have operated if either of the following conditions are noticed:

- No sound is heard when the power is turned on.
- Sound stops during a performance.

The function of this circuitry is to prevent circuitry damage if, for example, the positive and negative speaker connection wires are "shorted", or if speaker systems with an impedance less than the indicated rated impedance of the amplifier are used.
If this occurs, follow the procedure outlines below:

1. Turn off the power.
2. Determine the cause of the problem and correct it.
3. Turn on the power once again after one minute.

Note :

When the protection circuitry functions, the unit will not operate unless the power is first turned off and then on again.

4 Prevention of Electro Static Discharge (ESD) to Electrostatically Sensitive (ES) Devices

Some semiconductor (solid state) devices can be damaged easily by electricity. Such components commonly are called Electrostatically Sensitive (ES) Devices. Examples of typical ES devices are integrated circuits and some field-effect transistors and semiconductor "chip" components. The following techniques should be used to help reduce the incidence of component damage caused by electro static discharge (ESD).

1. Immediately before handling any semiconductor component or semiconductor-equiped assembly, drain off any ESD on your body by touching a known earth ground. Alternatively, obtain and wear a commercially available discharging ESD wrist strap, which should be removed for potential shock reasons prior to applying power to the unit under test.
2. After removing an electrical assembly equiped with ES devices, place the assembly on a conductive surface such as aluminium foil, to prevent electrostatic charge build up or exposure of the assembly.
3. Use only a grounded-tip soldering iron to solder or unsolder ES devices.
4. Use only an anti-static solder remover device. Some solder removal devices not classified as "anti-static (ESD protected)" can generate electrical charge to damage ES devices.
5. Do not use freon-propelled chemicals. These can generate electrical charges sufficient to damage ES devices.
6. Do not remove a replacement ES device from its protective package until immediately before you are ready to install it. (Most replacement ES devices are packaged with leads electrically shorted together by conductive foam, aluminium foil or comparable conductive material).
7. Immediately before removing the protective material from the leads of a replacement ES device, touch the protective material to the chassis or circuit assembly into which the device will be installed.

   Caution

   Be sure no power is applied to the chassis or circuit, and observe all other safety precautions.
8. Minimize body motions when handling unpackaged replacement ES devices. (Otherwise harmless motion such as the brushing together of your clothes fabric or the lifting of your foot from a carpeted floor can generate static electricity (ESD) sufficient to damage an ES device).

IMPORTANT SAFETY NOTICE

There are special components used in this equipment which are imporant for safety.
These parts are marked by ⚠ in the schematic diagrams, Exploded Views and replacement parts list. It is essential that these critical parts should be replaced with manufacturer's specified parts to prevent shock, fire, or other hazards. Do not modify the original design without permission of manufacturer.

5 Handling the Lead-free Solder

5.1. About lead free solder (PbF)

Distinction of PbF P.C.B.:

P.C.B.s (manufactured) using lead free solder will have a PbF stamp on the P.C.B.

Caution:

- Pb free solder has a higher melting point than standard solder; Typically the melting point is 50 - 70°F (30 - 40°C) higher. Please use a high temperature soldering iron. In case of soldering iron with temperature control, please set it to 700 ± 20°F (370 ± 10°C).
- Pb free solder will tend to splash when heated too high (about 1100°F/600°C).
- When soldering or unsoldering, please completely remove all of the solder on the pins or solder area, and be sure to heat the soldering points with the Pb free solder until it melts enough.

6 Handling Precautions For Traverse Deck

The laser diode in the traverse deck (optical pickup) may break down due to potential difference caused by static electricity of clothes or human body.

So, be careful of electrostatic breakdown during repair of the traverse deck (optical pickup).

- **Handling of traverse deck (optical pickup)**

1. Do not subject the traverse deck (optical pickup) to static electricity as it is extremely sensitive to electrical shock.
2. The short land between the No.4(LD) and No.5(GND) pins on the flexible board (FFC) is shorted with a solder build-up to prevent damage to the laser diode.To connect to the PC board, be sure to open by removing the solder build-up, and finishthe work quickly.
3. Take care not to apply excessive stress to the flexible board (FFC).
4. Do not turn the variable resistor (laser power adjustment). It has already been adjusted.

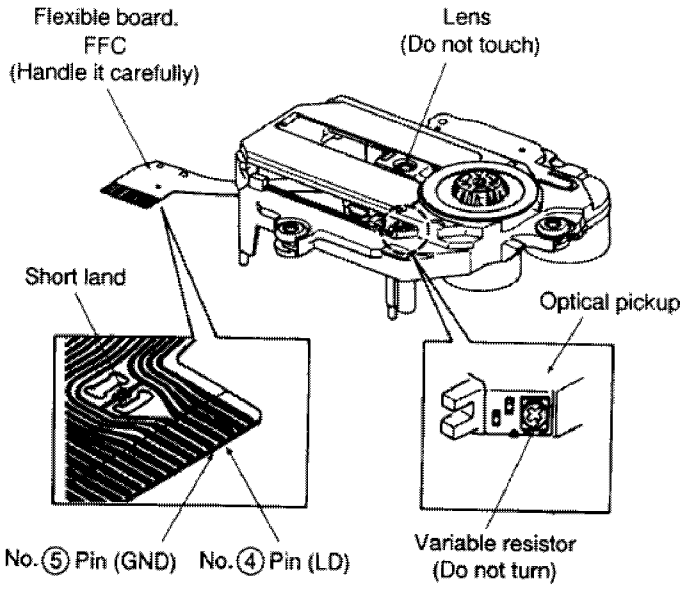

Fig 6.1

- **Grounding for electrostatic breakdown prevention**

1. Human body grounding

   Use the anti-static wrist strap to discharge the static electricity from your body.
2. Work table grounding

   Put a conductive material (sheet) or steel sheet on the area where the traverse deck (optical pickup) is placed, and ground the sheet.

Caution :

The static electricity of your clothes will not be grounded through the wrist strap. So, take care not to let your clothes touch the traverse deck (optical pickup).

Caution when Replacing the Traverse Deck :

The traverse deck has a short point shorted with solder to protect the laser diode against electroststics breakdown. Be sure to remove the solder from the short point before making connections.

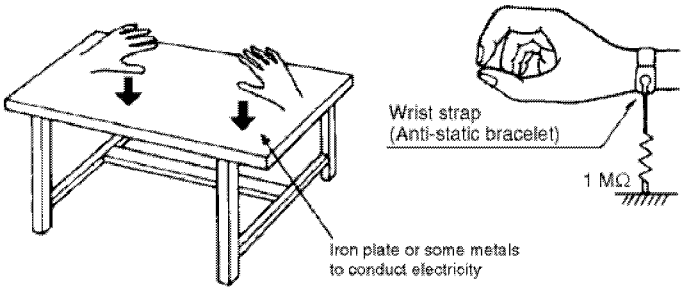

Fig 6.2

7 Precaution of Laser Diode

Caution :

This product utilizes a laser diode with the unit turned "ON", invisible laser radiation is emitted from the pick up lens.
Wavelength : 780 nm
Maximum output radiation power from pick up : 100 μW/VDE
Laser radiation from pick up unit is safety level, but be sure the followings:

1. Do not disassemble the optical pick up unit, since radiation from exposed laser diode is dangerous.
2. Do not adjust the variable resistor on the pick up unit. It was already adjusted.
3. Do not look at the focus lens using optical instruments.
4. Recommend not to look at pick up lens for a long time.

ACHTUNG :

Dieses Produkt enthält eine Laserdiode. Im eingeschalteten Zustand wird unsichtbare Laserstrahlung von der Lasereinheit abgestrahlt.
Wellenlänge : 780nm
Maximale Strahlungsleistung der Lasereinheit :100 μW/VDE
Die Strahlung an der Lasereinheit ist ungefährlich, wenn folgende Punkte beachtet werden:

1. Die Lasereinheit nicht zerlegen, da die Strahlung an der freigelegten Laserdiode gefährlich ist.
2. Den werkseitig justierten Einstellregler der Lasereinhit nicht verstellen.
3. Nicht mit optischen Instrumenten in die Fokussierlinse blicken.
4. Nicht über längere Zeit in die Fokussierlinse blicken.

ADVARSEL: I dette a apparat anvendes laser.

CAUTION!

THIS PRODUCT UTILIZES A LASER.

USE OF CONTROLS OR ADJUSTMENTS OR PERFORMANCE OF PROCEDURES OTHER THAN THOSE SPECIFIED HEREIN MAY RESULT IN HAZARDOUS RADIATION EXPOSURE.

■ Use of caution label

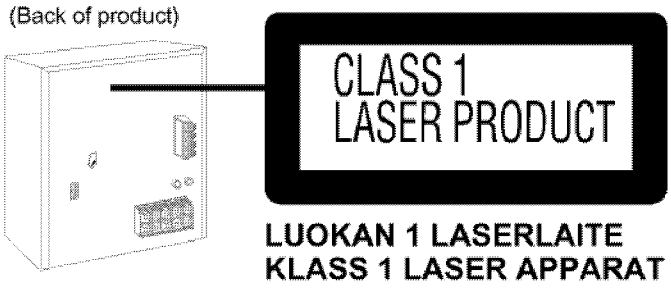

CAUTION	– INVISIBLE LASER RADIATION WHEN OPEN. AVOID EXPOSURE TO BEAM. IEC60825-1 / Class 3b
VARNING	– OSYNLIG LASERSTRÅLNING NÄR DENNA DEL ÄR ÖPPNAD. BETRAKTA EJ STRÅLEN.
ADVARSEL	– USYNLIG LASERSTRÅLING VED ÅBNING. UNDGÅ UDSÆTTELSE FOR STRÅLING.
ADVARSEL	– USYNLIG LASERSTRÅLING NÅR DEKSEL ÅPNES. UNNGÅ EKSPONERING FOR STRÅLEN.
VARO!	AVATTAESSA OLET NÄKYMÄTÖNTÄ. ÄLTTIINÄ LASERSÄTEILYLLE. ÄLÄ KÄRSO SÄTEESSEEN.
VORSICHT	– UNSICHTBARE LASERSTRAHLUNG, WENN ABDECKUNG GEÖFFNET. NICHT DEM STRAHL AUSSETZEN.
ATTENTION	– RAYONNEMENT LASER INVISIBLE EN CAS D'OUVERTURE. EXPOSITION DANGEREUSE AU FAISCEAU.
注意	– 打开时有不可见激光辐射。避免接触光束照射。
注意	– ここを開くと不可視レーザー光が出ます。ビームを見たり、触れたりしないで下さい。 RQLX0059

Inside of product
Tuotteen sisällä
Produktets innside

8 Accessories

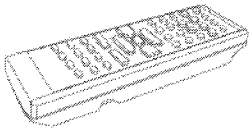

Remote Control Transmitter

FM Indoor Antenna

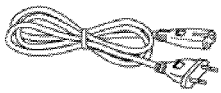

AC Power Supply Cord
(For E & EG ony)

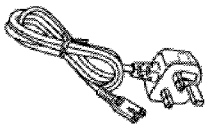

AC Power Supply
Cord (For EB ony)

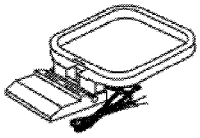

AM Loop Antenna

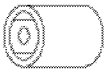

Antenna
Plug
Adaptor
(For EB
only)

9 Operation Procedures

Front panel controls

Main unit

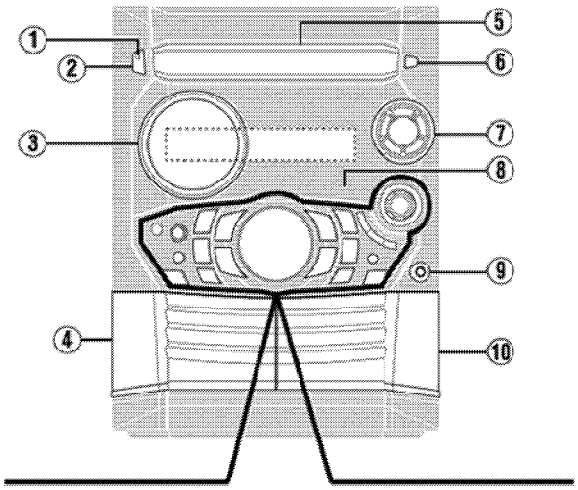

① AC supply indicator [AC IN]
This indicator lights when the unit is connected to the AC mains supply.
② Standby/on switch [⏻/I]
Press to switch the unit from on to standby mode or vice versa. In standby mode, the unit is still consuming a small amount of power.
③ Display
④ Deck 1 cassette holder
⑤ Disc tray
⑥ CD tray open/close button [⏏, OPEN/CLOSE]
⑦ CD direct play buttons [1 ~ 5]
⑧ Remote control signal sensor
⑨ Headphones jack [PHONES]
⑩ Deck 2 cassette holder

Center console

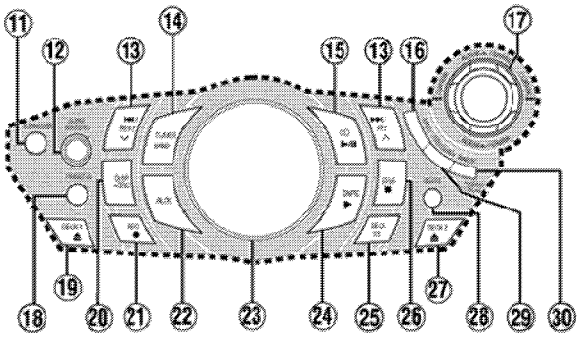

⑫ Super sound EQ button [SUPER SOUND EQ]
⑬ CD skip/search, tape fast-forward/rewind, tune/preset channel select, time adjust buttons [⏮/REW/∨, ⏭/FF/∧]
⑭ Tuner/band select button [TUNER, BAND]
⑮ CD play/pause button [▶/II, CD]
⑯ Preset EQ select button [PRESET EQ]
⑲ Deck 1 open button [⏏, DECK 1]
⑳ Display, demonstration button [DISP, –DEMO]
㉑ Record button [●, REC]
㉒ AUX button [AUX]
㉓ Volume control [VOLUME DOWN, UP]
㉔ Tape play button [▶, TAPE]
㉕ Deck select button [DECK 1/2]
㉖ Stop/program clear button [■, STOP]
㉗ Deck 2 open button [⏏, DECK 2]

Remote control

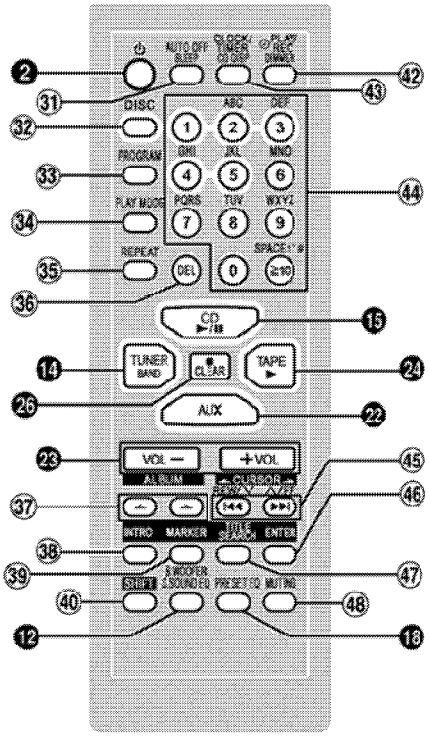

Buttons such as ❷ function in exactly the same way as the buttons on the main unit.

㉛ Sleep timer + Auto off button [SLEEP, AUTO OFF]
㉜ Disc button [DISC]
㉝ Program button [PROGRAM]
㉞ Play mode select button [PLAY MODE]
Use this for selecting CD play mode, tune mode, FM mode, AM beat proof and deck select.
㉟ Repeat button [REPEAT]
㊱ Delete button [DEL]
㊲ Album skip buttons [⏮ , ⏭ , ALBUM]
㊳ Intro button [INTRO]
㊴ Marker memory/recall button [MARKER]
㊵ Shift button [SHIFT]
To use functions labelled in orange ※ :
While pressing [SHIFT], press the corresponding button.
※ : For buttons [AUTO OFF], [CLOCK/TIMER] and [⏲PLAY/REC]
㊷ Dimmer + Play timer/record timer button [DIMMER, ⏲PLAY/REC]
㊸ For Russia, Ukraine, Australia, New Zealand, South Africa and Middle East :
CD display + Clock/timer button [CD DISP, CLOCK/TIMER]
For others:
CD display/RDS display + Clock/timer button [CD/RDS DISP, CLOCK/TIMER]
㊹ Numbered, character buttons [≧10, 1–9, 0, A-Z, SPACE!"#]
㊺ CD skip/search, tape fast-forward/rewind, tune/preset channel select, time adjust, cursor buttons [⏮, REW/∨, ⏭ CURSOR, ⏭/FF, ∧, CURSOR ⏭]
㊻ Enter button [ENTER]
㊼ Title search mode select button [TITLE SEARCH]
㊽ Muting button [MUTING]

10 Disassembly and Assembly of Main Component

10.1. Disassembly flow chart

The following chart is the procedure for disassembling the casing and inside parts for internal inspection when carrying out the servicing.

To assemble the unit, reverse the steps shown in the chart as below.

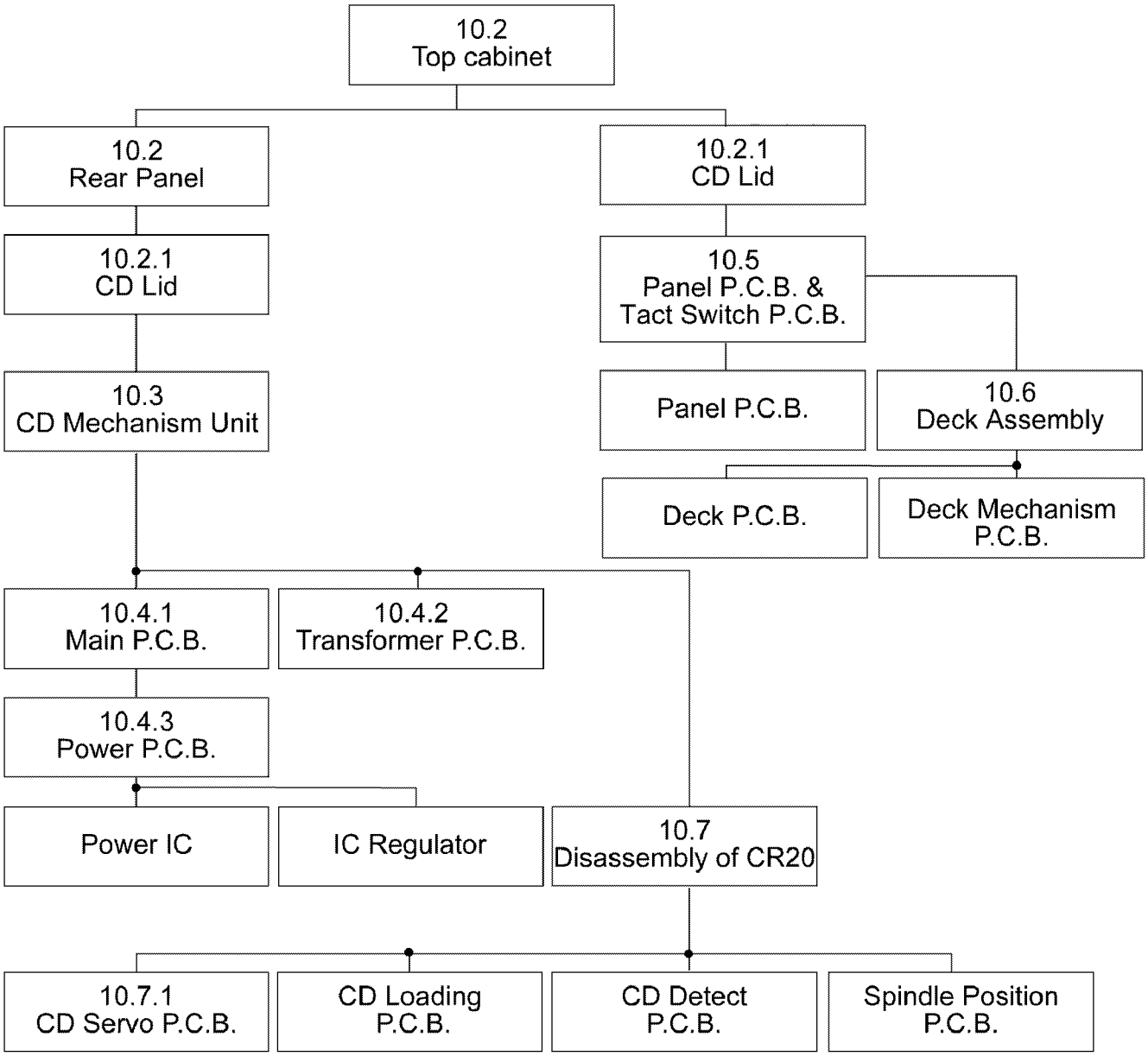

10.2. Disassembly of Top Cabinet and Rear Panel

Step 1 Remove 3 screws each side and 5 screws at rear panel.

Step 2 Lift up both sides of top cabinet, push the cabinet ass'y toward the rear and remove it.

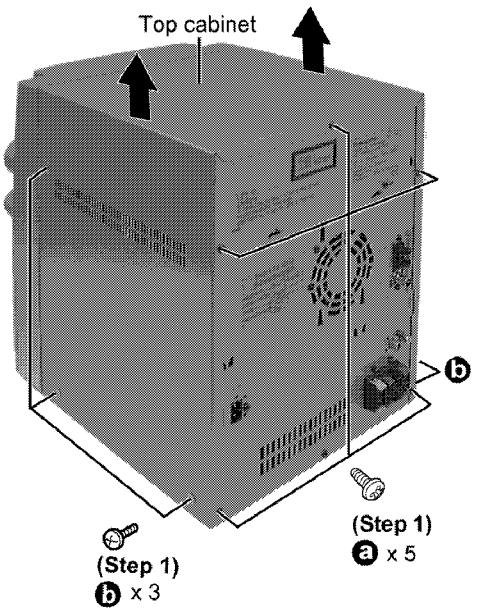

- **Disassembly of Rear Panel**

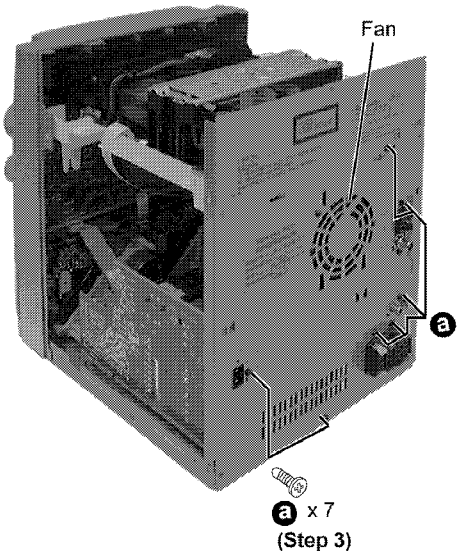

Step 3 Remove 7 screws.

Step 4 Detach wire at CN305 (Fan).

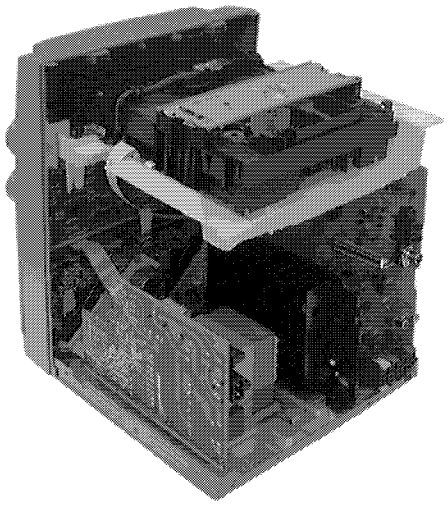

Step 5 Draw rear panel backward to remove.

10.2.1. Disassembly for CD Lid

(The CD changer unit can be removed after the CD Lid is removed)

- Follow the (Step 1) - (Step 5) of Item 10.2 - Disassembly of Top Cabinet and Rear Panel

When opening the disc tray automatically (Using Power Supply)

Step 1 Connect the AC power cord.

Step 2 Press the POWER button to power up the main unit.

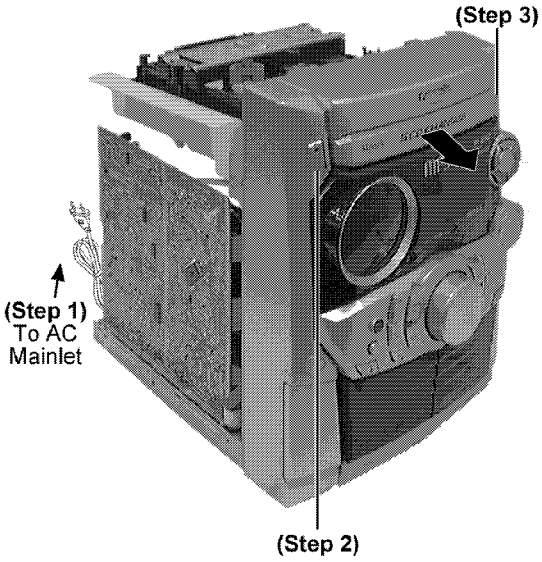

Step 3 Press the OPEN/CLOSE button, the disc tray will be open automatically.

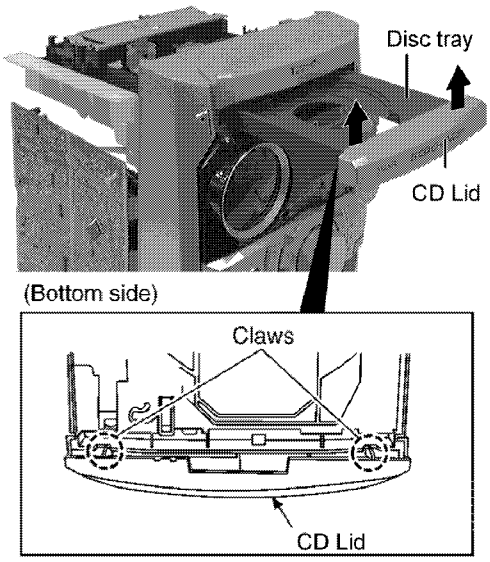

Step 4 Release the 2 claws, and then remove the CD Lid.

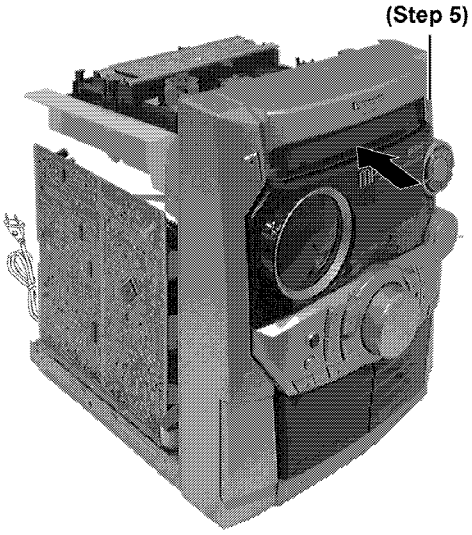

Step 5 Press the OPEN/CLOSE button, the disc tray will be close.

[Open the disc tray manually (Using service tools)]

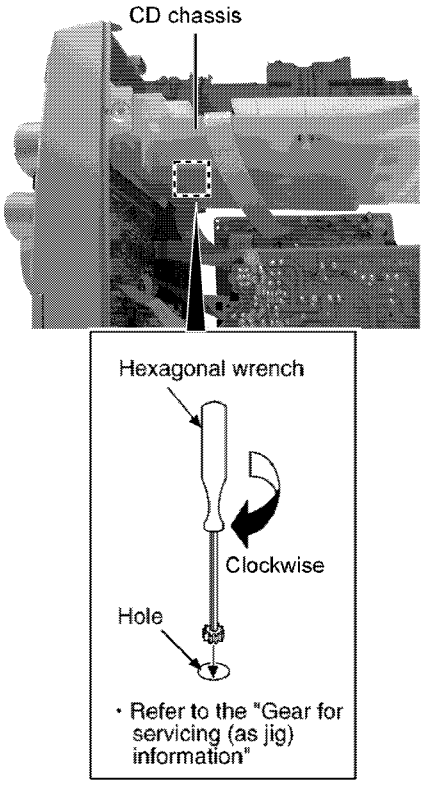

Step 1 Insert the gear tool into the hole on the underside of CD chassis and then rotate in the direction of arrow. The disc tray will be open.

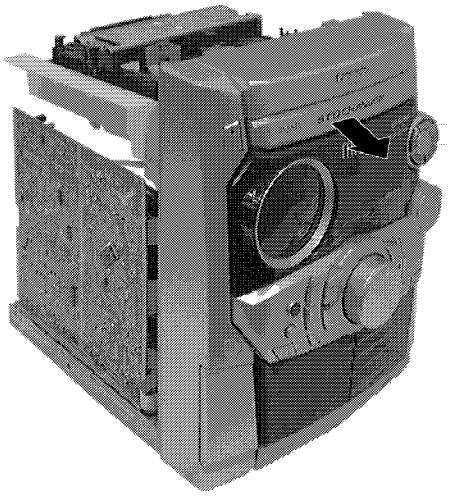

Step 2 Release the 2 claws, and then remove the CD lid cover.

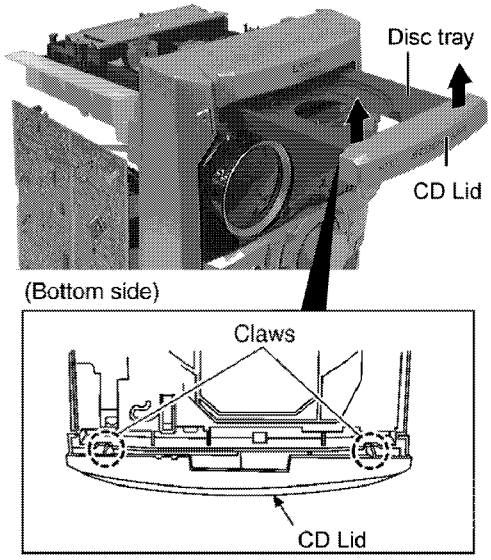

Step 3 Repeat Step 2 but rotate the gear tools in anti-clockwise direction.

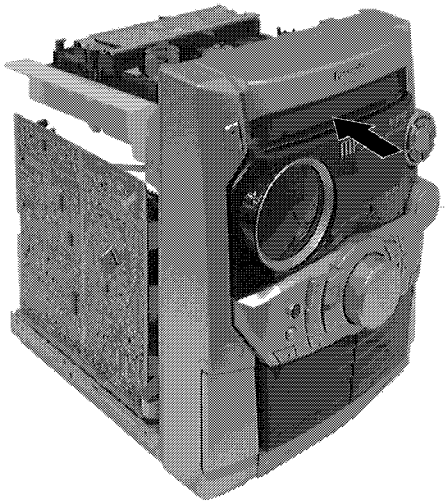

Step 4 The disc tray will be close.

10.3. Disassembly of CD Mechanism Unit

- Follow the (Step 1) - (Step 2) of Item 10.2 - Disassembly of Top Cabinet and Rear Panel
- Follow the (Step 1) - (Step 5) of Item 10.2.1 - Disassembly for CD Lid

Step 1 Detach the FFC boards (CN309 & CN310).

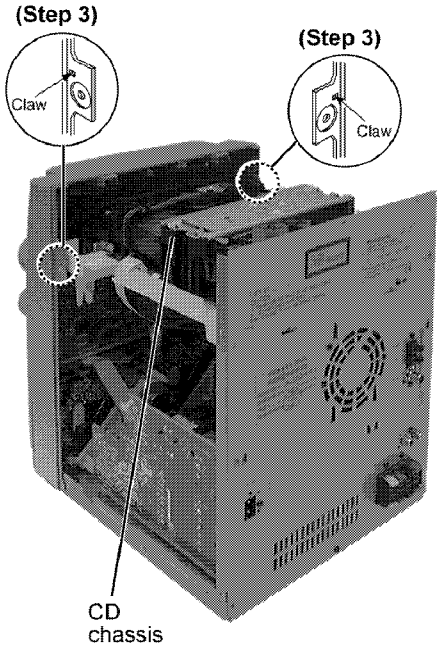

Step 2 Release the claws of both ends, and then lift up the CD Mechanism Unit.

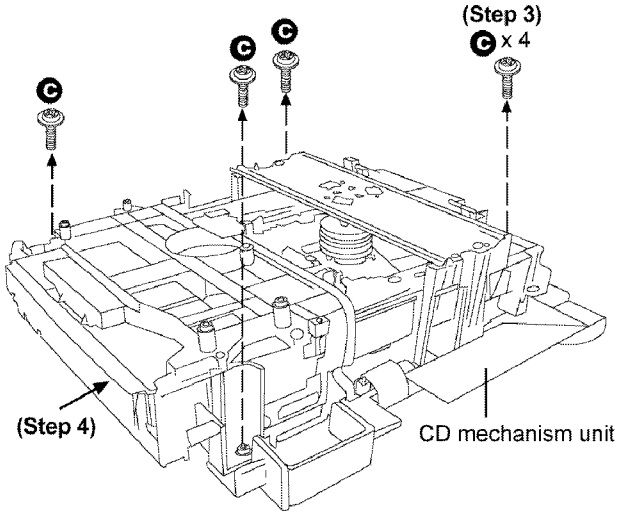

Step 3 Remove 4 screws.

Step 4 Remove the CD chassis.

Step 5 Lay the CD mechanism unit as shown.

- **Note:**

  For disassembly of CD mechanism unit, please refer to Section 10.7 of this manual.

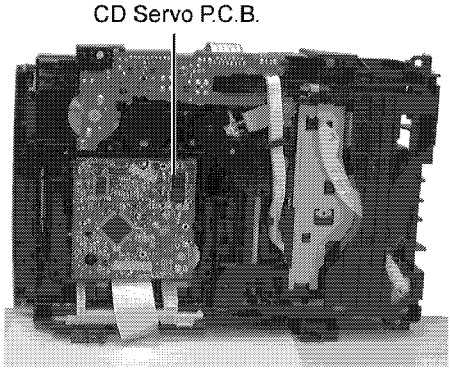

10.4. Disassembly Main P.C.B., Transformer P.C.B. & Power P.C.B.

10.4.1. Disassembly for the Main P.C.B.

- Follow the (Step 1) - (Step 5) of Item 10.2 - Disassembly of Top Cabinet and Rear Panel
- Follow the (Step 1) - (Step 5) of Item 10.2.1 - Disassembly for CD Lid
- Follow the (Step 1) - (Step 5) of Item 10.3 - Disassembly of the CD Mechanism Unit

Step 1 Disconnect FFC board at CN303, CN302 & CN304 .

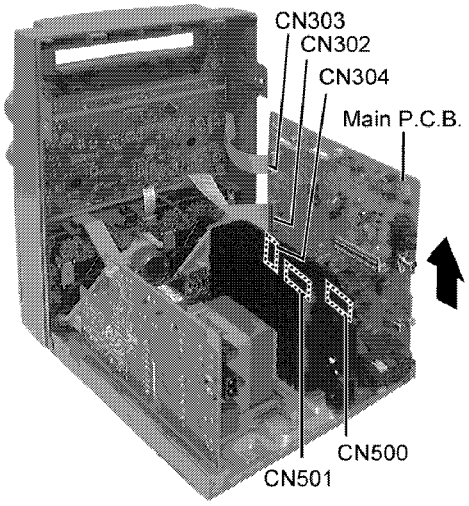

Step 2 Lift up Main P.C.B. by disconnect CN500 & CN501 as arrow shown above.

10.4.2. Disassembly of the Transformer P.C.B.

- Follow the (Step 1) - (Step 5) of Item 10.2 - Disassembly of Top Cabinet and Rear Panel
- Follow the (Step 1) - (Step 5) of Item 10.2.1 - Disassembly for CD Lid
- Follow the (Step 1) - (Step 5) of Item 10.3 - Disassembly of the CD Mechanism Unit

Step 1 Remove 3 screws.

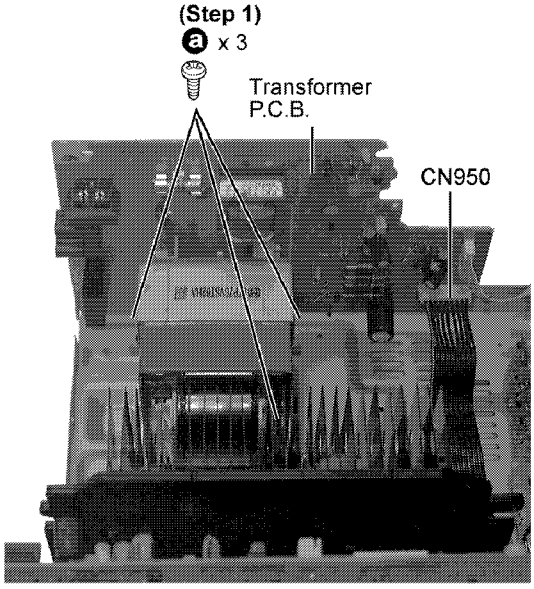

Step 2 Disconnect connector CN950.

10.4.3. Disassembly of the Power P.C.B.

- Follow the (Step 1) - (Step 5) of Item 10.2 - Disassembly of Top Cabinet and Rear Panel
- Follow the (Step 1) - (Step 5) of Item 10.2.1 - Disassembly for CD Lid
- Follow the (Step 1) - (Step 5) of Item 10.3 - Disassembly of the CD Mechanism Unit
- Follow the (Step 1) - (Step 2) of Item 10.4.1 - Disassembly for the Main P.C.B.

Step 1 Remove 2 screws.

Step 2 Remove the 2 screws fixed at heat sink.

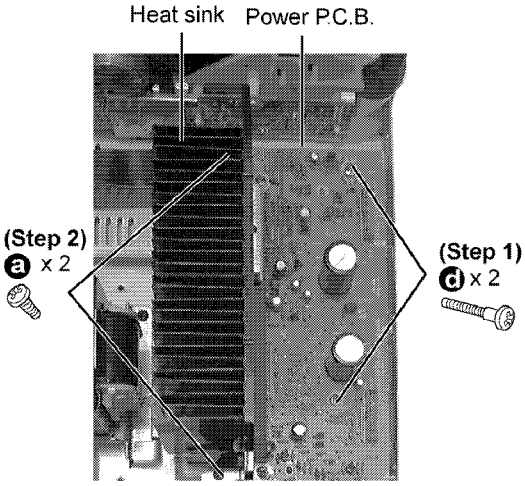

NOTE:

Insulate Power P.C.B. with insulation material to avoid short circuit.

- Replacement of Power Amplifier IC & Voltage Regulator

Step 1 Remove 2 screws (For Power Amp IC) and 1 screw (For Voltage Regulator) .

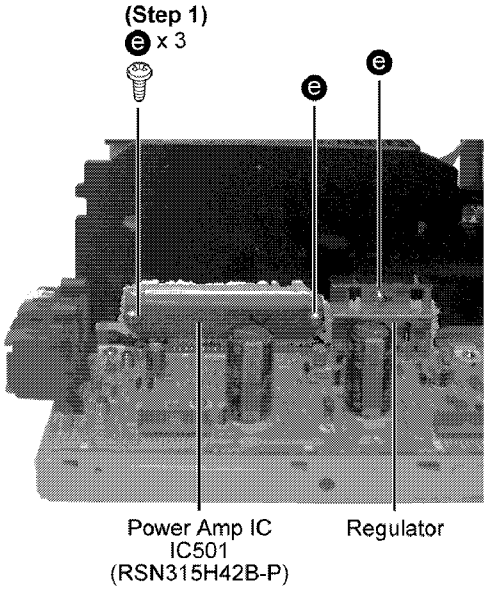

Step 2 Break the joint with a metal cutter as shown below.

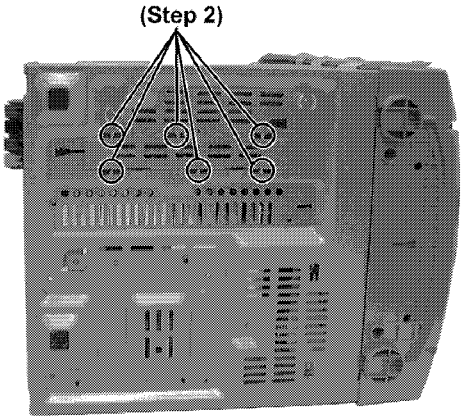

Step 3 Unsolder the terminals of Power Amp IC, transistor and replace the components.

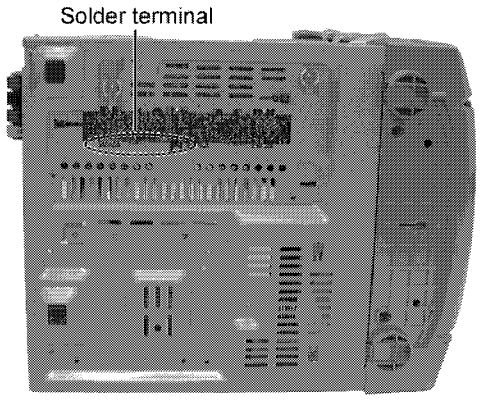

Step 4 Fix back the cutted portion with a screw as shown.

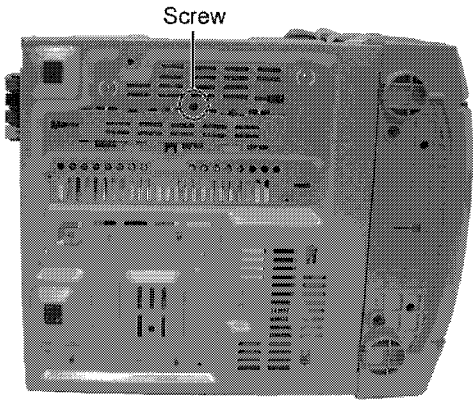

10.5. Disassembly of Panel P.C.B. & Tact Switch P.C.B.

- Follow the (Step 1) - (Step 2) of Item 10.2 - Disassembly of Top Cabinet and Rear Panel
- Follow the (Step 1) - (Step 5) of Item 10.2.1 - Disassembly for CD Lid
- Follow the (Step 1) - (Step 5) of Item 10.3 - Disassembly of the CD Mechanism Unit
- Disassembly of Panel P.C.B.

Step 1 Lay the unit as shown below.

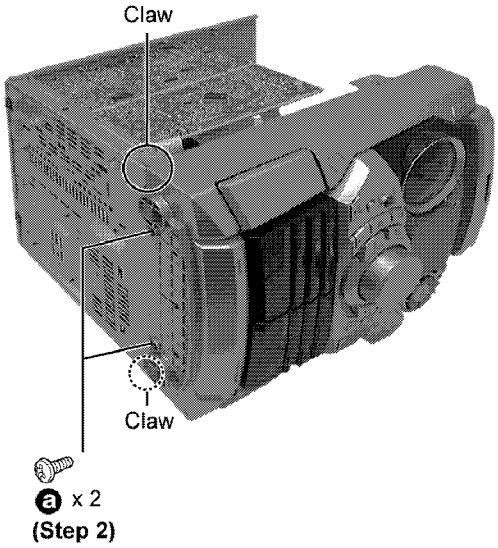

Step 2 Remove 2 screws, release 2 claws, and then draw the front panel ass'y forward.

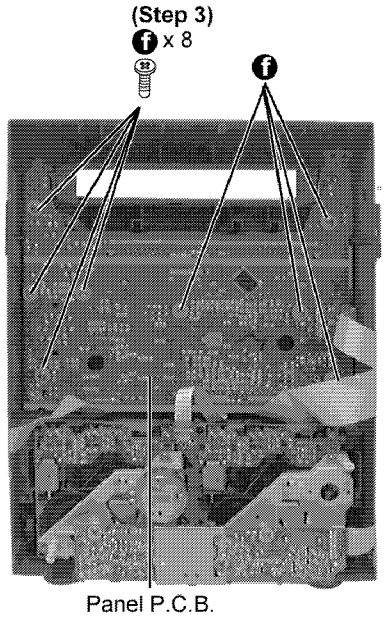

Step 3 Remove the 8 screws.

Step 4 Disconnect FFC board (CN302).

- Disassambly of Tact Switch P.C.B.

Step 5 Disconnect connector CN900.

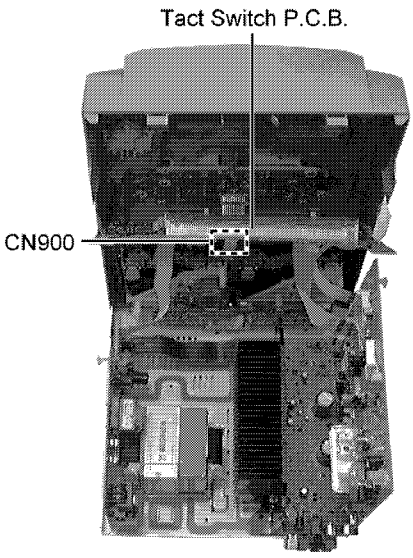

Step 6 Pull out the volume knob.

Step 7 Pull Panel P.C.B. forward.

10.6. Disassembly of Deck Mechanism Unit & Deck P.C.B.

- Follow the (Step 1) - (Step 2) of Item 10.2 - Disassembly of Top Cabinet and Rear Panel
- Follow the (Step 1) - (Step 5) of Item 10.2.1 - Disassembly for CD Lid
- Follow the (Step 1) - (Step 2) of Item 10.3 - Disassembly of the CD Mechanism Unit

Step 1 Detach FFC board. (CN971)

Step 2 Disconnect FFC flat cable from the connector (CN1001).

Step 3 Remove the 5 screws.

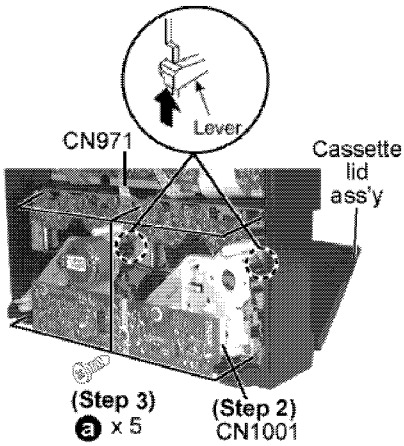

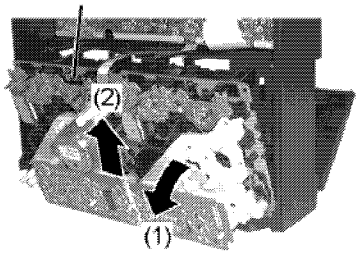

Step 4 Push the lever upward, and then open the cassette lid ass'y (For DECK1 and DECK2).

Step 5 Tilt the cassette mechanism unit in the direction of arrow (1), and then remove it in the direction of arrow (2).

- For replacement of Deck P.C.B.

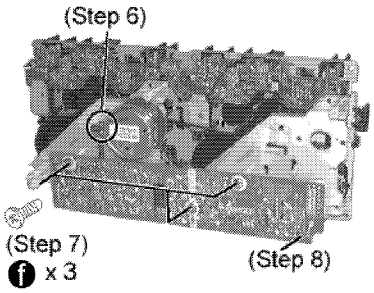

Step 6 Unsolder the motor terminals.

Step 7 Remove 3 screws.

Step 8 Remove Deck P.C.B.

10.7. CD Mechanism Main Component Replacement Procedures

- Follow the (Step 1) - (Step 2) of Item 10.2 - Disassembly of Top Cabinet and Rear Panel
- Follow the (Step 1) - (Step 5) of Item 10.2.1 - Disassembly for CD Lid
- Follow the (Step 1) - (Step 5) of Item 10.3 - Disassembly of the CD Mechanism Unit

10.7.1. Replacement of the Traverse Deck

Step 1 Remove the CD changer unit.

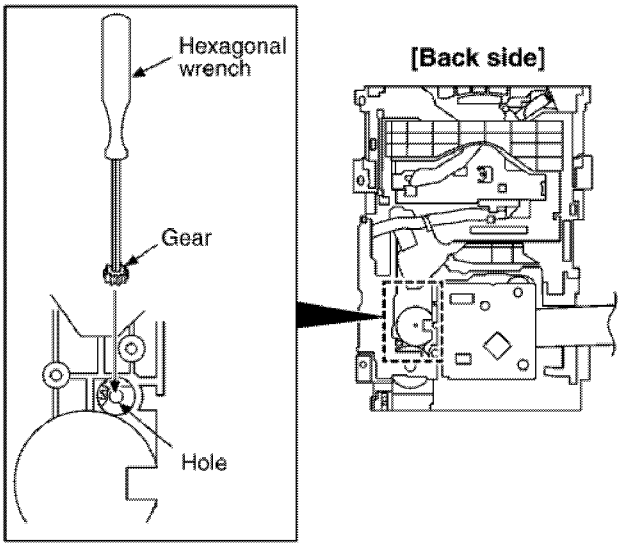

Step 2 Insert the gear with hexagonal wrench into the hole.

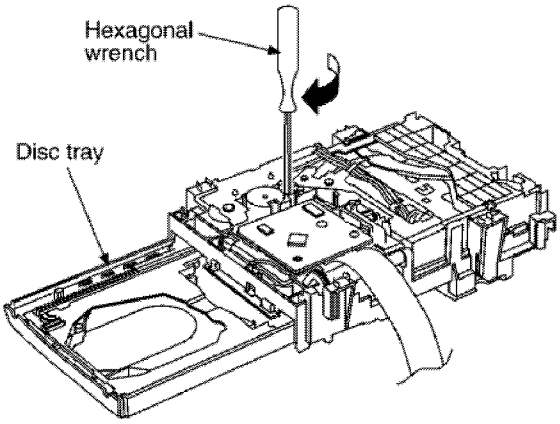

Step 3 Rotate the hexagonal wrench in the direction of arrow (clockwise), and then open the disc tray fully.

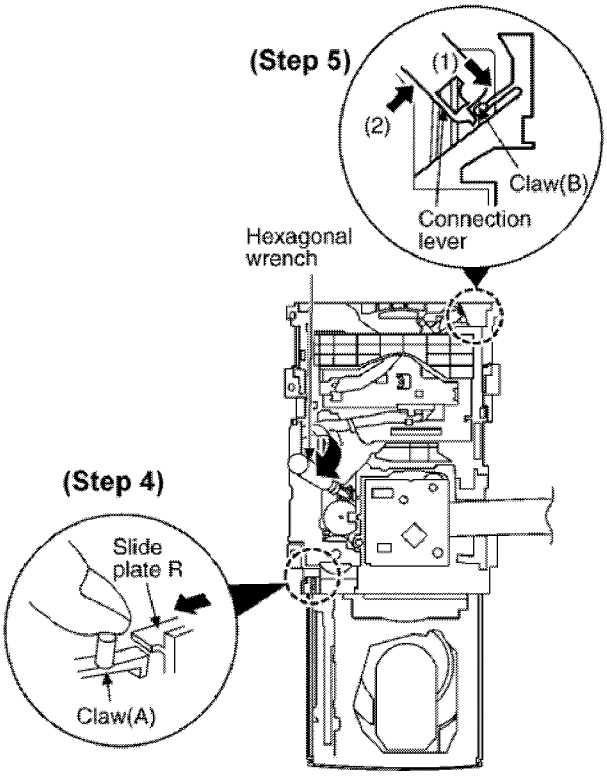

Step 4 With pressing the claw (A), rotate the hexagonal wrench clockwise. (The slide plate R moves for a little amount.)

Step 5 Pressing the claw (B) in the direction of arrow (1), the connection lever moves in the direction of arrow (2).

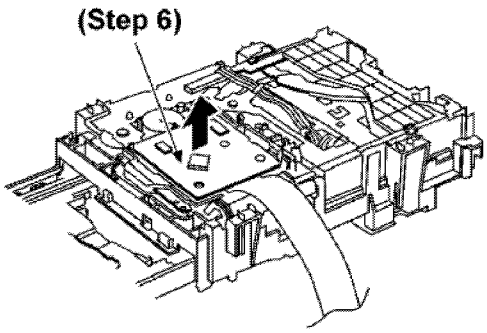

Step 6 Lift up the traverse deck ass'y.

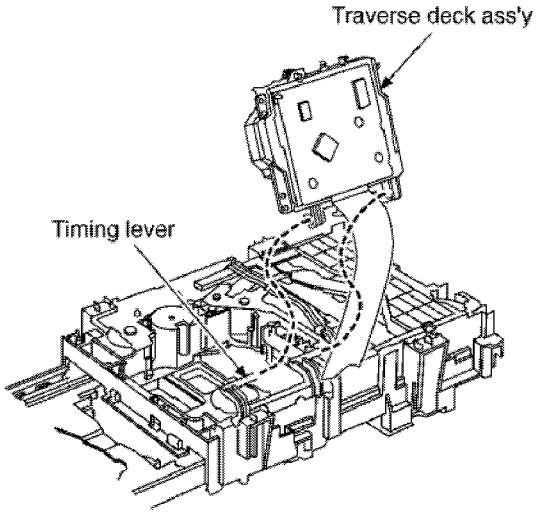

Step 7 Remove the traverse deck ass'y from the timing lever.

Caution:

When removing or inserting the traverse deck avoid touching the OPU lens and pressing onto the turntable.

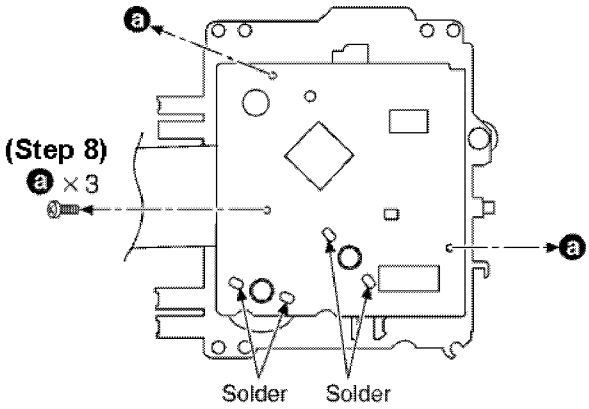

Step 8 Remove 3 screws.

Step 9 Unsolder the motor terminals (4 points).

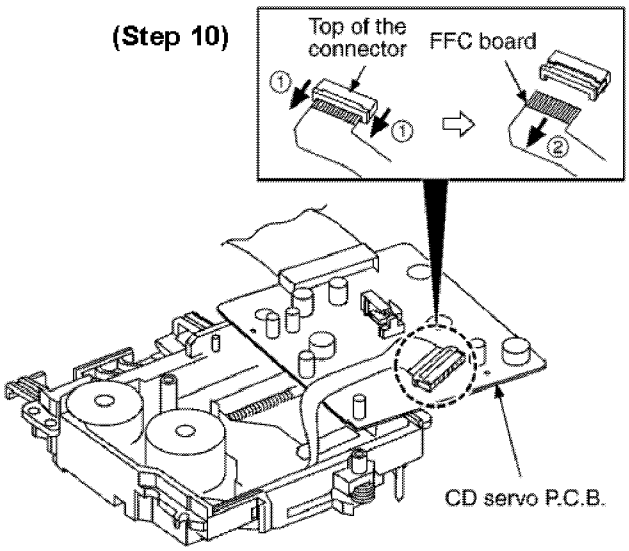

Caution:
Insert a short pin into the traverse unit FFC board.
(Refer to "**Handling Precautions for Traverse Deck**".)

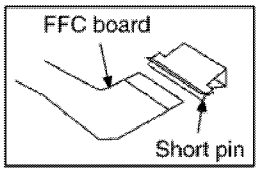

Step 10 Remove the FFC board from the connector, and then remove the CD Servo P.C.B.

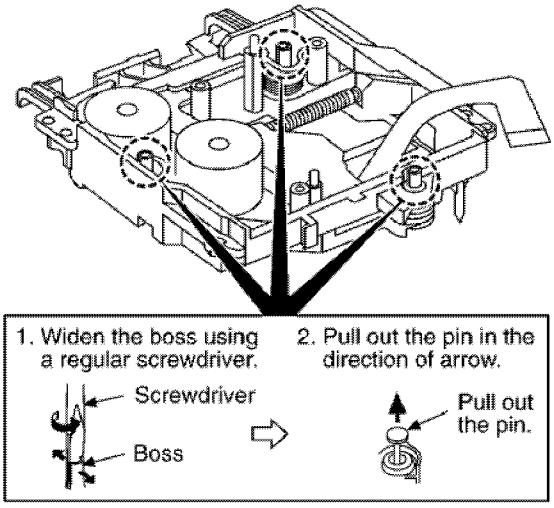

Step 11 Remove the pin.

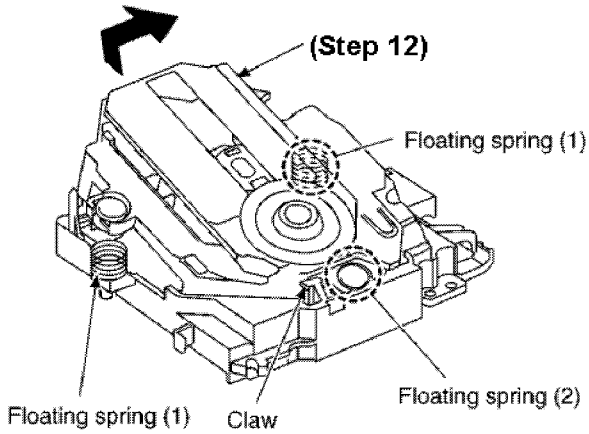

Step 12 Release the claw, and then remove the traverse deck ass'y.

Note:

Be careful not to lose the 3 floating spring because those will also be removed on removal of the traverse deck ass'y.

- **Installation of the CD Servo P.C.B. after replacement**

Step 1 Connect the FFC board.

Step 2 Install the CD servo P.C.B. in the traverse deck ass'y.

Step 3 Remove 3 screws.

Step 4 Solder.

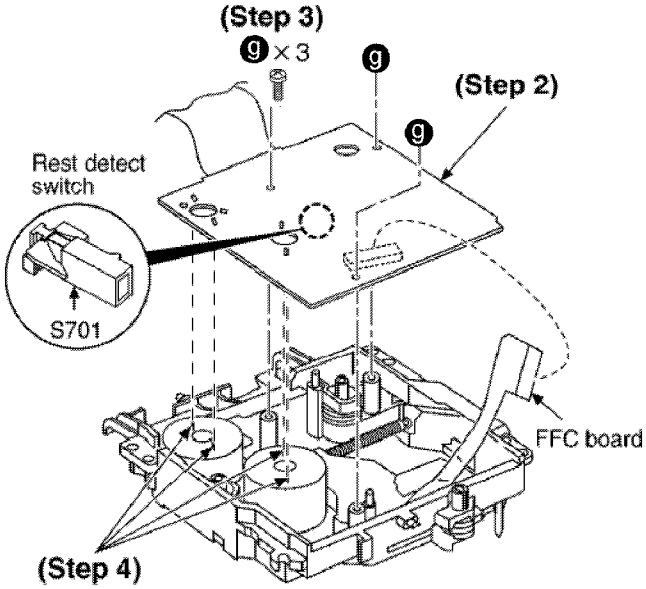

- **Note for installation of the CD servo P.C.B.**

Before installing the CD servo P.C.B., move the optical pickup toward the outer edge from the mark "◀".
[Otherwise, the rest detect switch (S701) mounted on the CD servo P.C.B. may be damaged.]

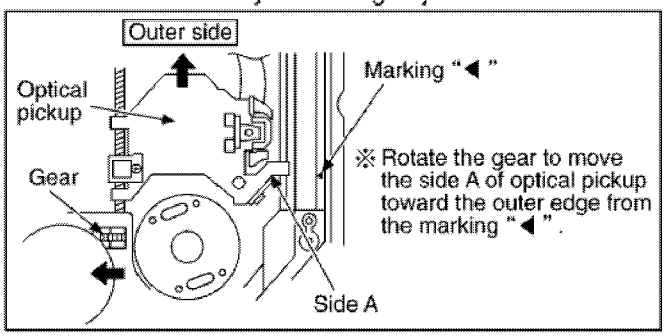

- **Installation for traverse deck ass'y**

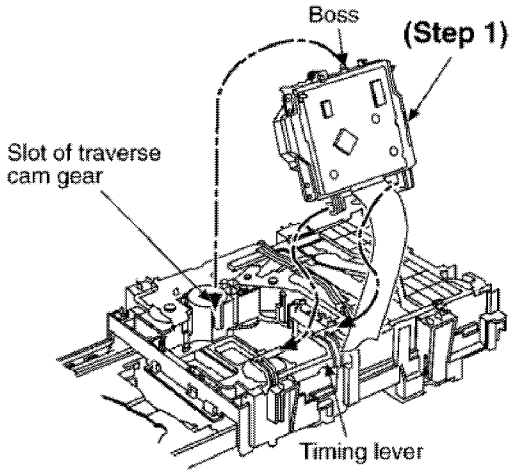

Step 1 Install the traverse deck ass'y to the timing lever.

Step 2 Align the boss of traverse deck ass'y with the slot of traverse cam gear.

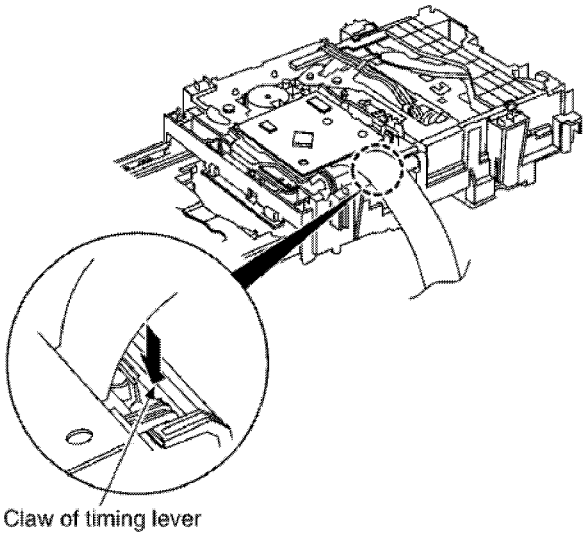

Step 3 Force the claw of timing lever.

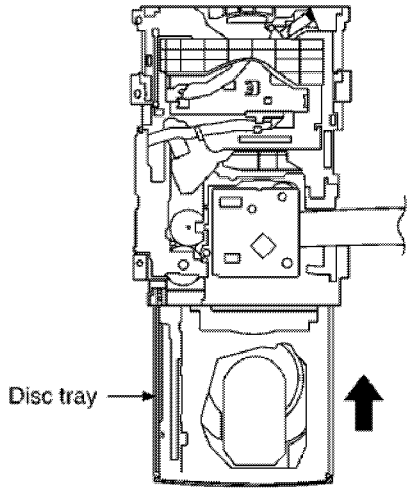

Step 4 Force the disc tray fully.

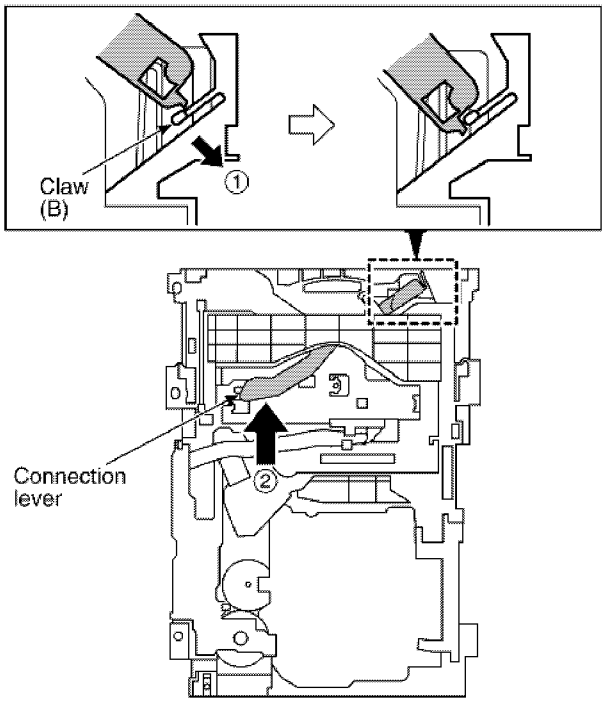

Step 5 With pressing the claw (B) in the direction of arrow (1), force the connection lever in the direction of arrow (2).

10.7.2. Replacement for the Disc Tray

Step 1 Remove 4 screws.

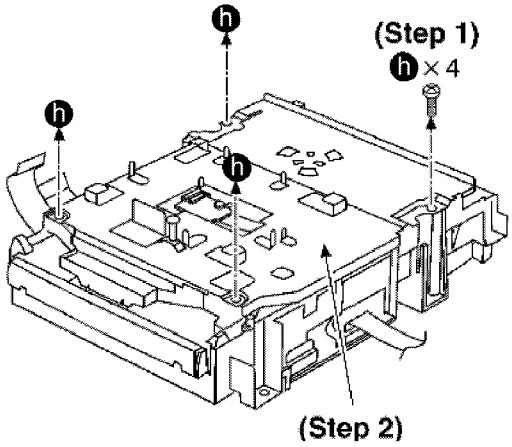

Step 2 Remove the upper plate.

Step 3 Remove 3 screws.

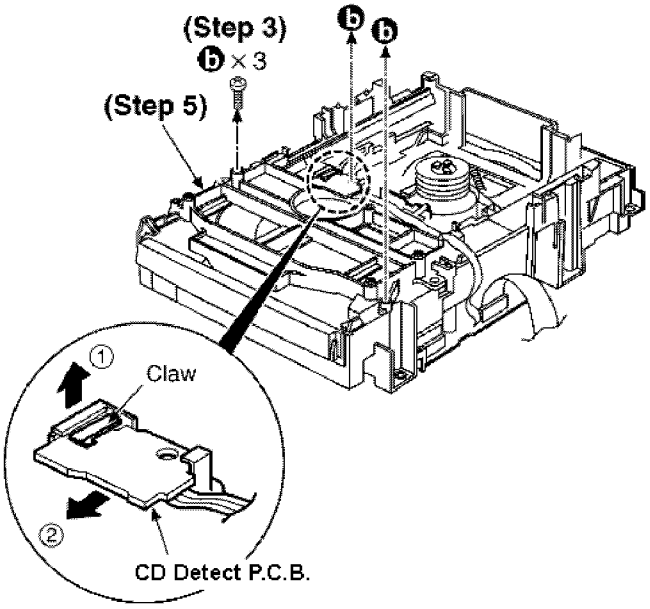

Step 4 With lifting the claw in the direction of (1), draw the CD Detect P.C.B. in the direction of arrow (2).

Step 5 Remove the mechanism cover.

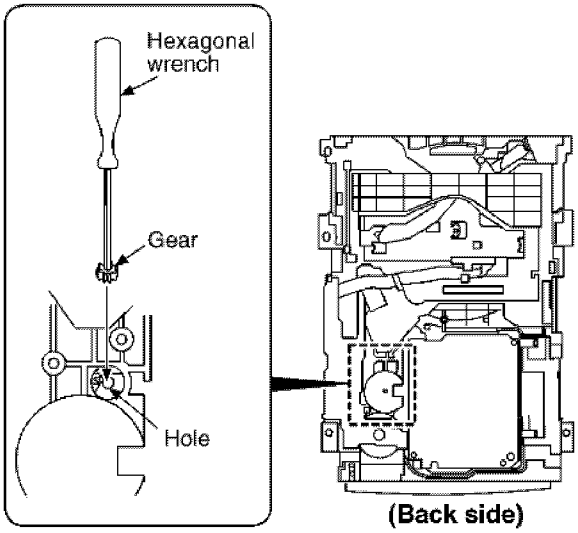

Step 6 Insert the gear with hexagonal wrench into the hole.

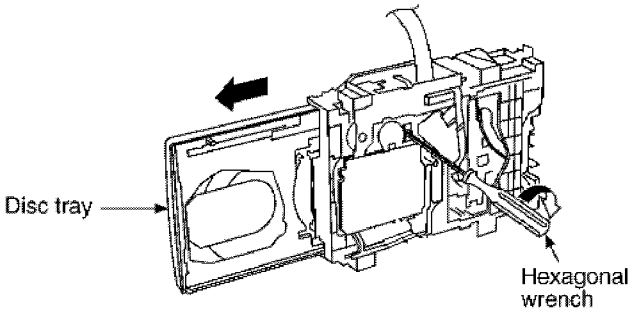

Step 7 Rotate the hexagonal wrench in the direction of arrow, and then open the disc tray fully.

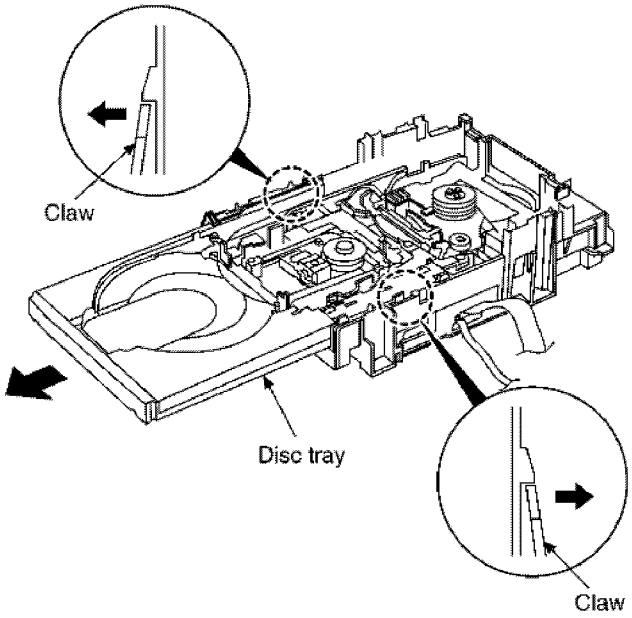

Step 8 Release the both claws, and then draw the disc tray.

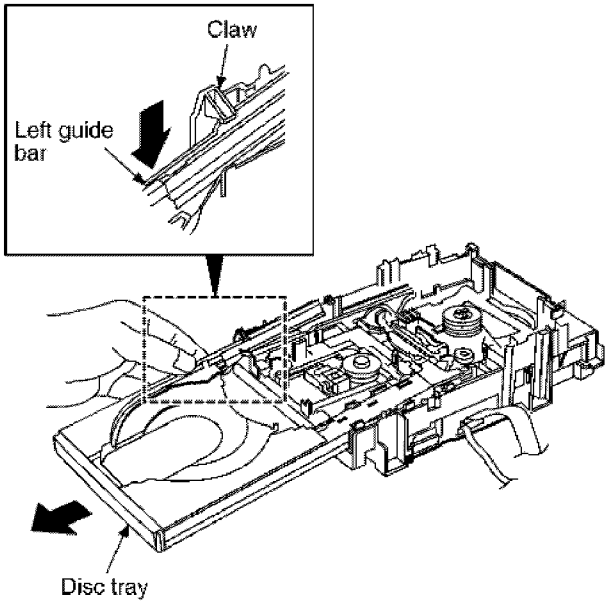

Step 9 With forcing the left guide bar manually because the left guide bar interfers with claw, draw the disc tray.

[Installation of the disc tray after replacement]

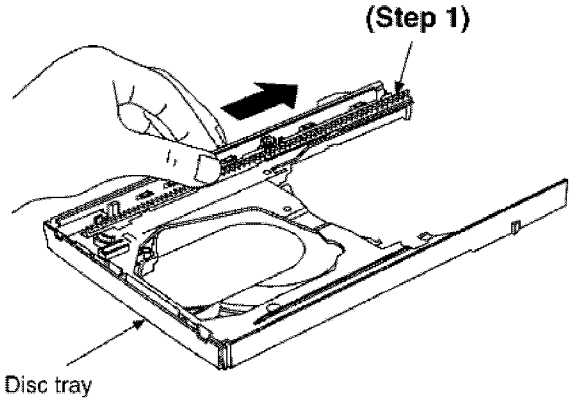

Step 1 Slide the drive rack fully in the direction of arrow.

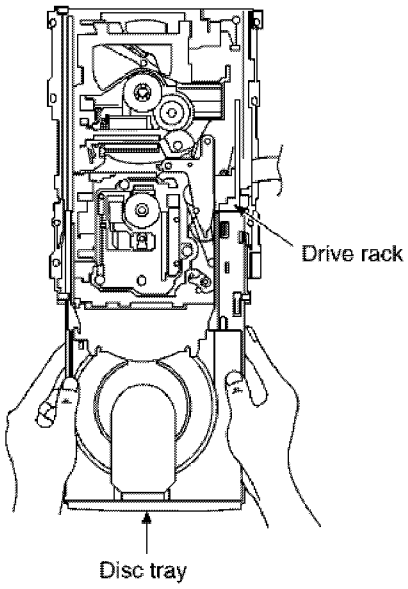

Step 2 Holding the drive rack not to move, install the disc tray.

Step 3 Align the drive rack with the drive gear.

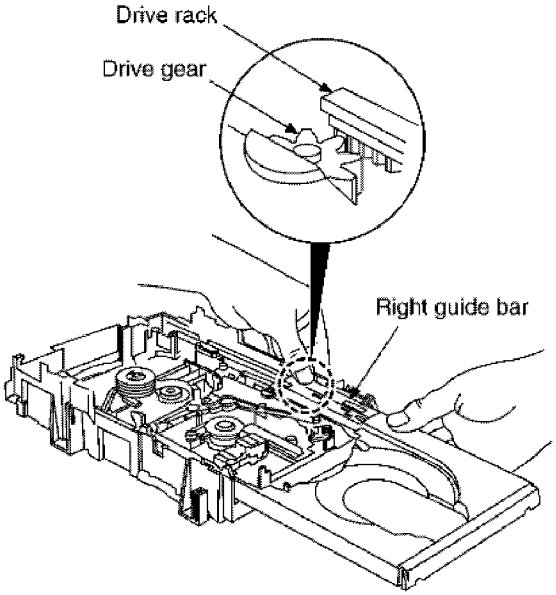

NOTE:

Force the right guide bar of tray base manually not to move upwards.

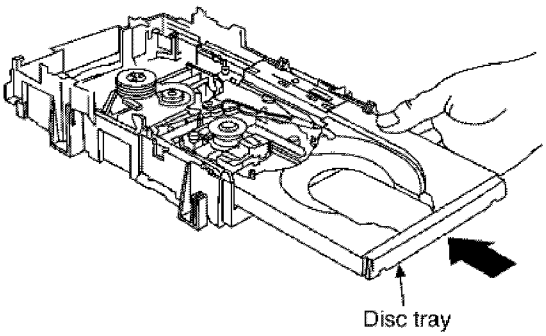

Step 4 Holding the disc tray manually, push the disc tray in the direction of the arrow.

10.7.3. Disassembly and reassembly for mechanism base drive unit

Step 1 Remove 3 screws.

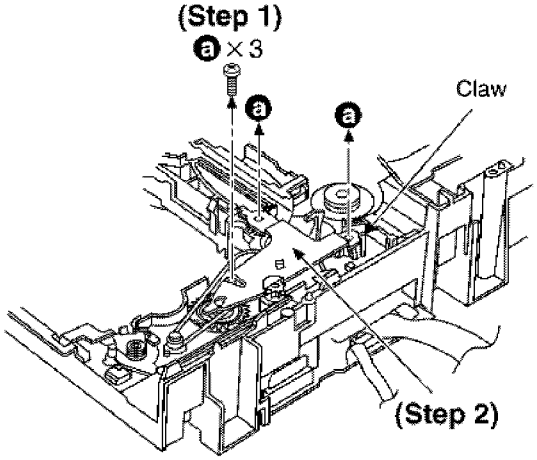

Step 2 Release the claw, and then remove the gear holder.

Step 3 Remove the belt and change gear spring.

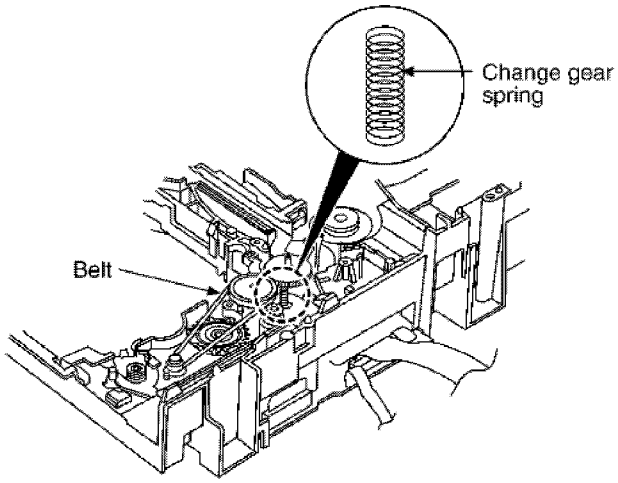

NOTE:

Take care not to lose the change gear spring.

Step 4 Remove the pulley gear, change gear and UP/DOWN gear.

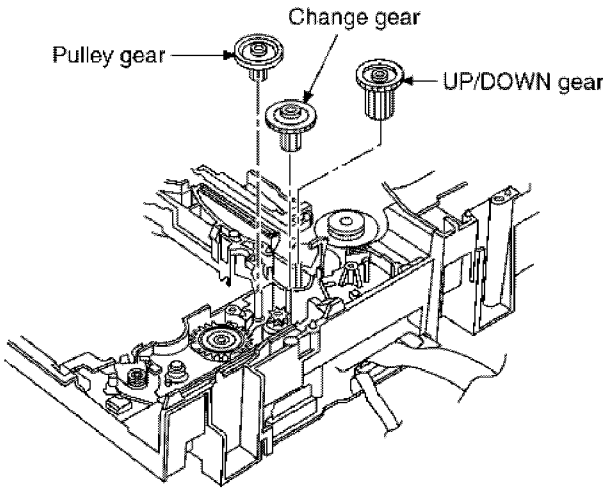

Step 5 Release the 2 claws, and then remove the bottom SW P.C.B..

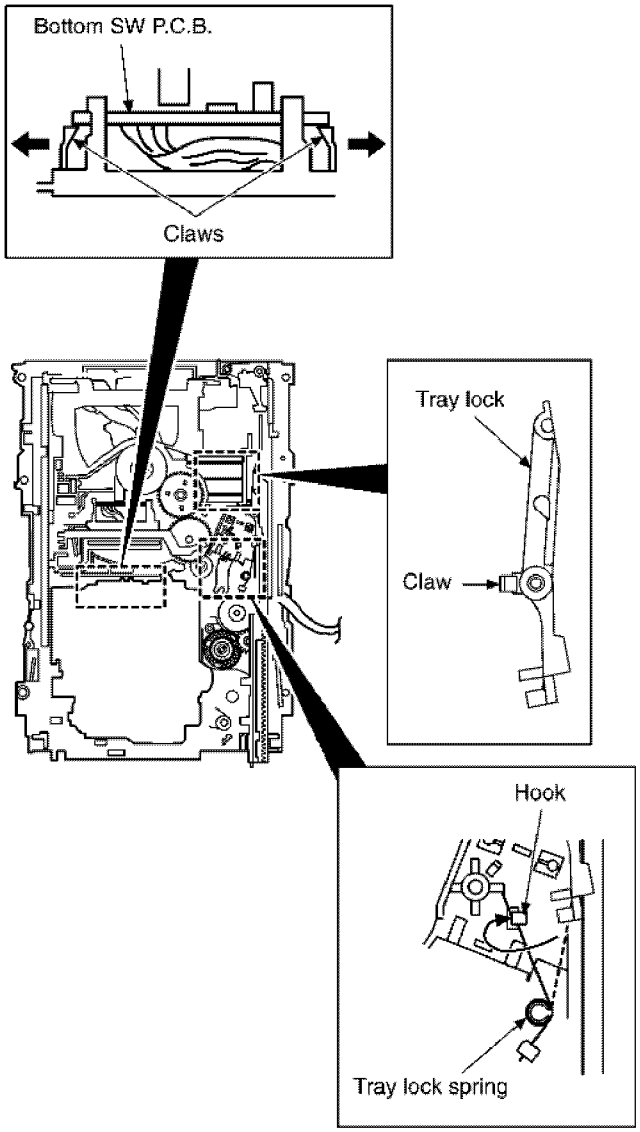

Step 6 Install the tray lock spring to hook temporary.

Step 7 Release the claw, and then remove the tray lock.

Step 8 Release the claw, and then remove the rear lock.

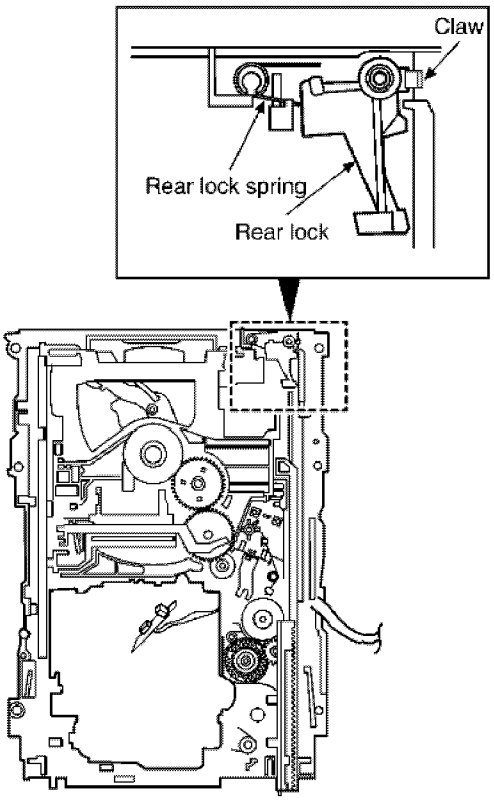

Step 9 Pressing the claw (B) in the direction of arrow (1), force the connection lever in the direction of arrow (2).

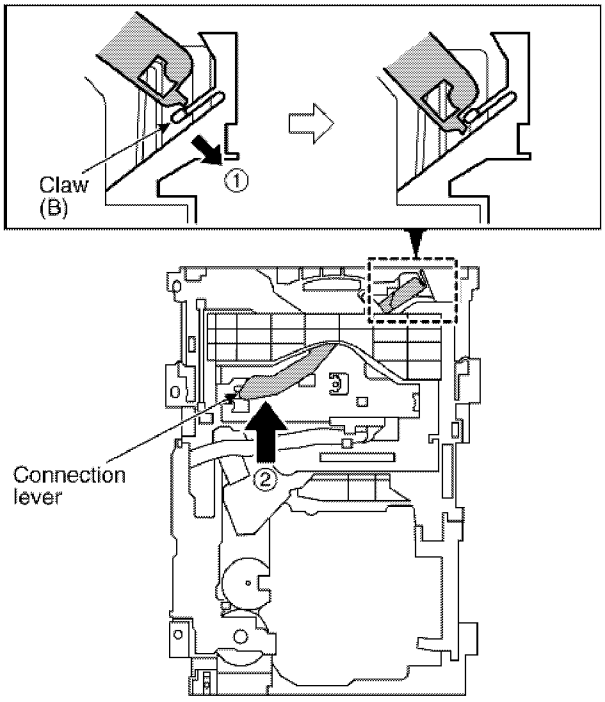

Step 10 Move the slide plate 1 to the end of stock side.

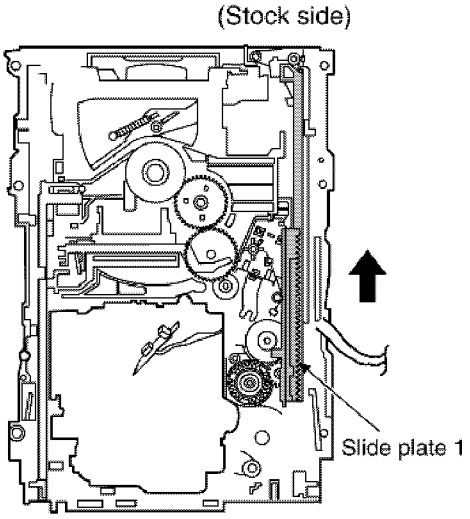

Step 11 Lift up the left end of spindle base unit in the direction of arrow (1), and then remove the unit in the direction of arrow (2).

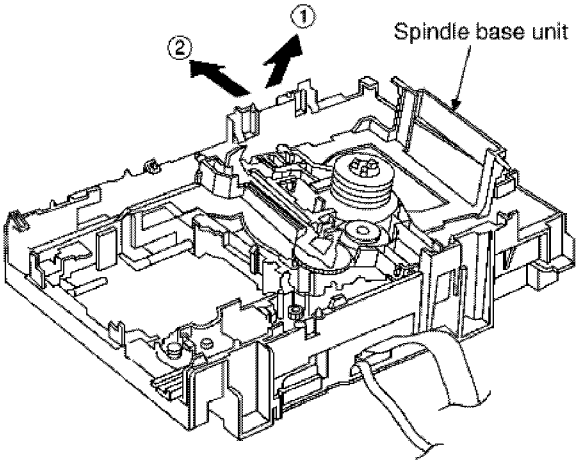

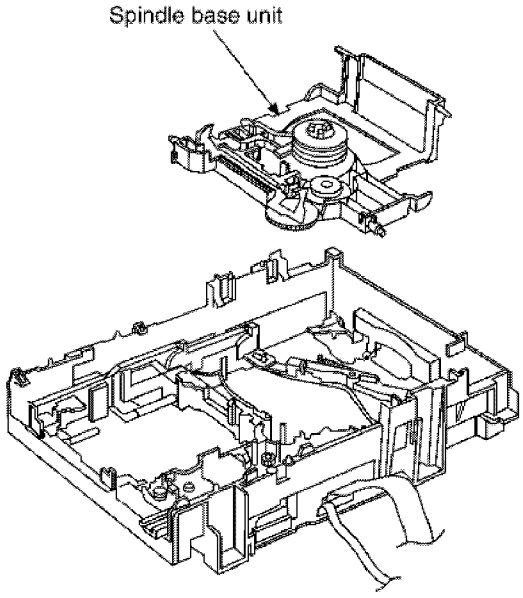

Step 12 Remove slide plate 1 and slide plate 2.

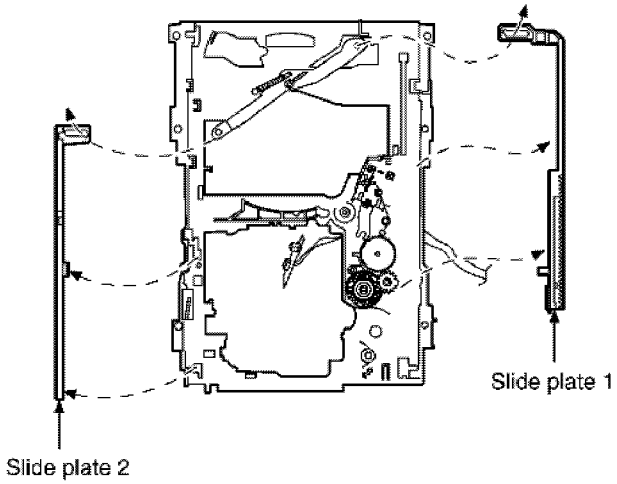

Step 13 Remove the traverse relay gear, traverse cam gear and drive gear.

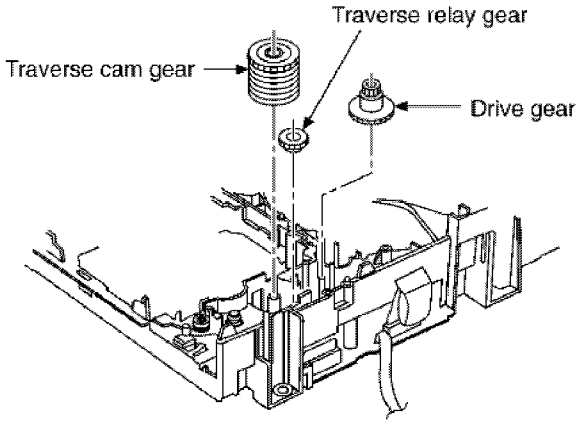

[Dissassembly/reassembly for the spindle base unit]

Step 1 Draw the 5 disc spacers.

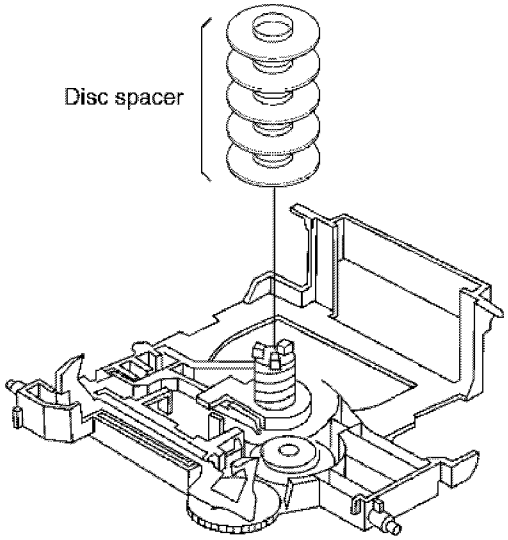

Step 2 Pushing the claw, slide the support plate in the direction of arrow, and then remove it.

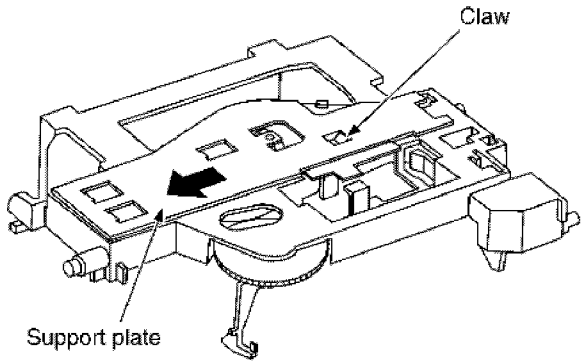

Step 3 Rotate the disc lever in the direction of arrow (1), draw the disc lever.

(Installation for disc lever spring)

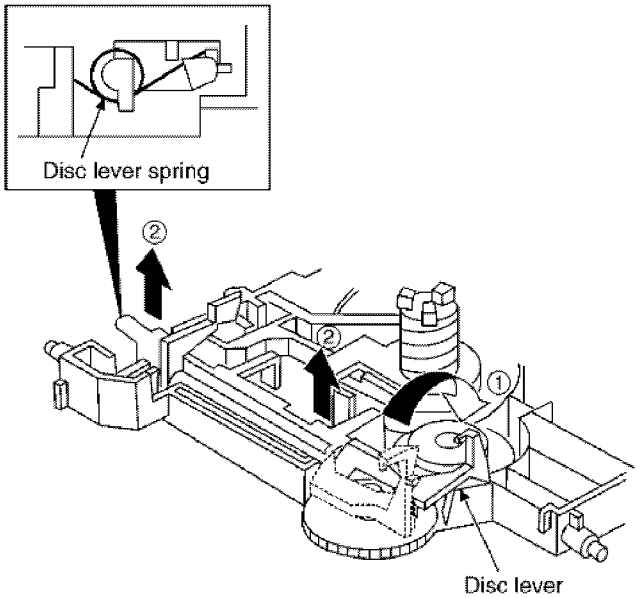

NOTE:

Take care not to lose the disc lever spring.

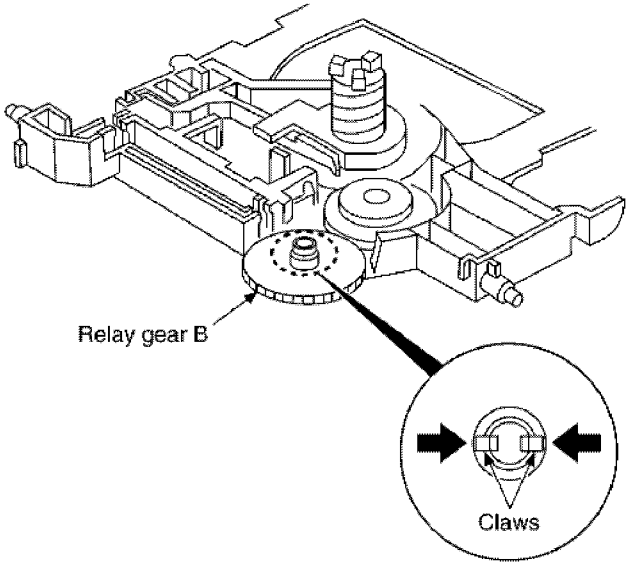

Step 4 Release the 2 claws, and then draw the relay gear B.

Step 5 Release the 2 claws as shown below.

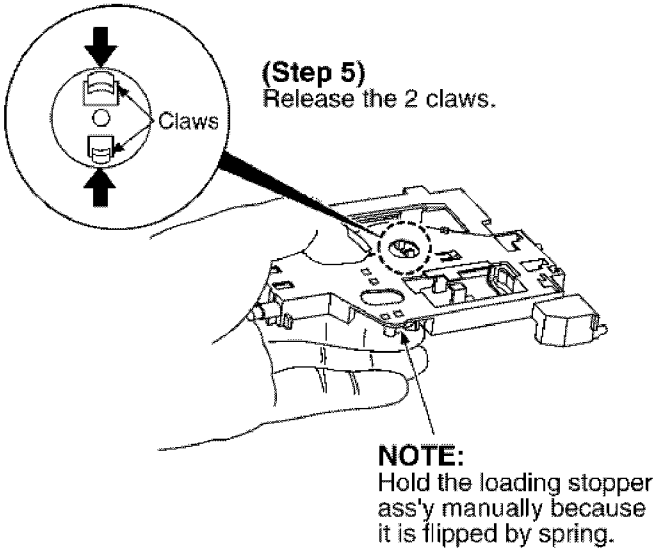

NOTE:

Hold the loading stopper ass'y manually bacause it is flipped by spring.

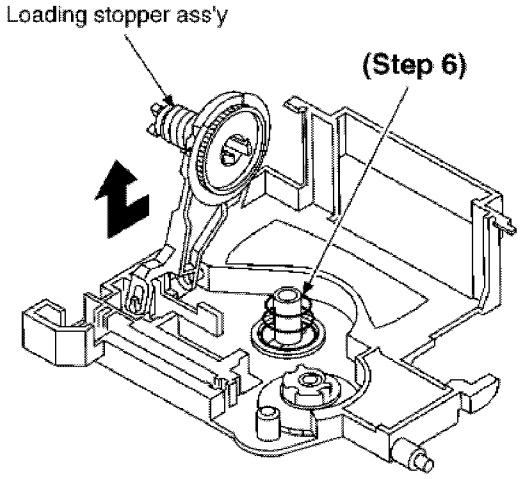

Step 6 Remove the cushion spring.

Step 7 Remove the loading stopper ass'y in the direction of arrow.

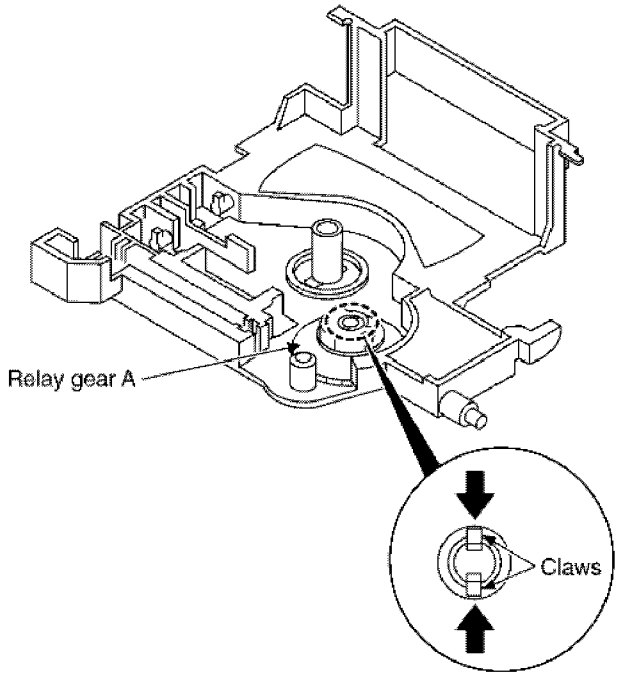

Step 8 Release the 2 claws, and then remove the relay gear A.

Step 9 Release the 2 claws, and then remove the spindle shaft.

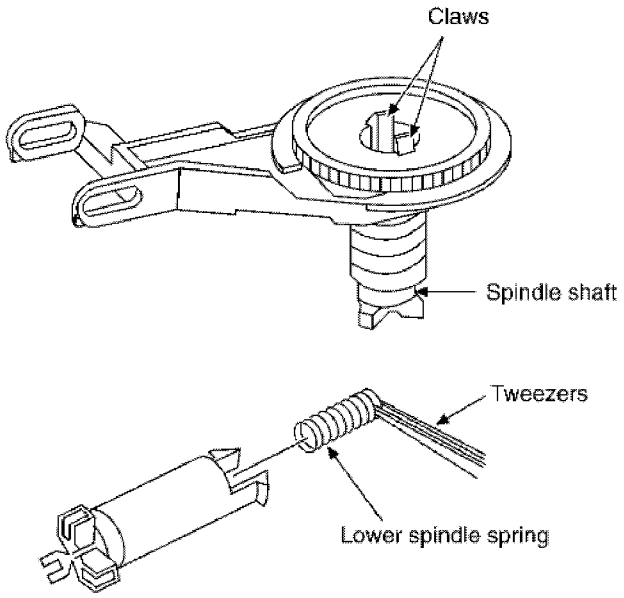

Step 10 Remove the lower spindle spring with tweezers.

Step 11 Force the lower hook with thin tip of minus screwdriver.

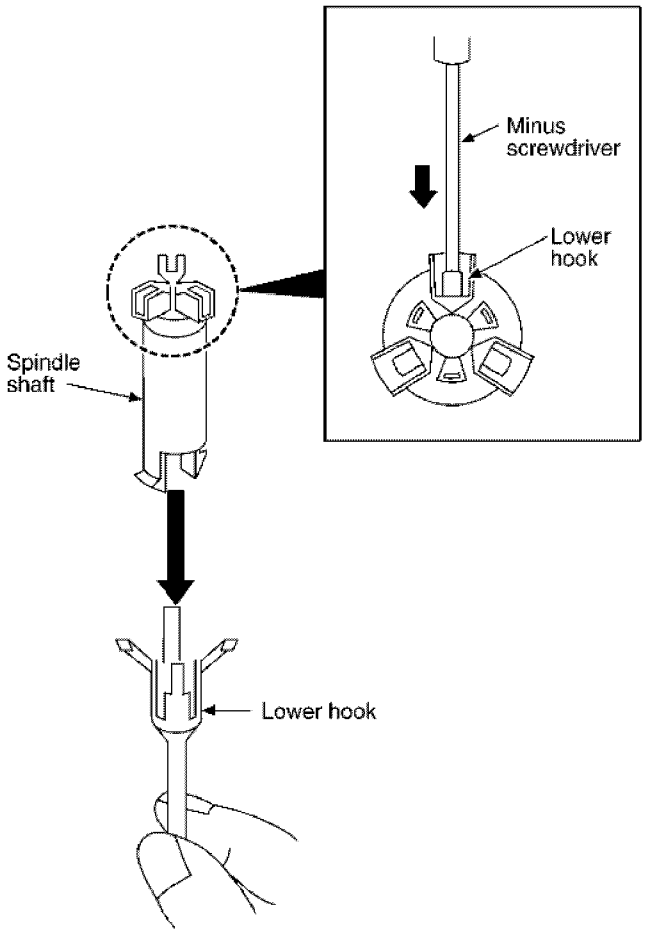

Step 12 Squeeze the shaft of lower hook, and then draw it.

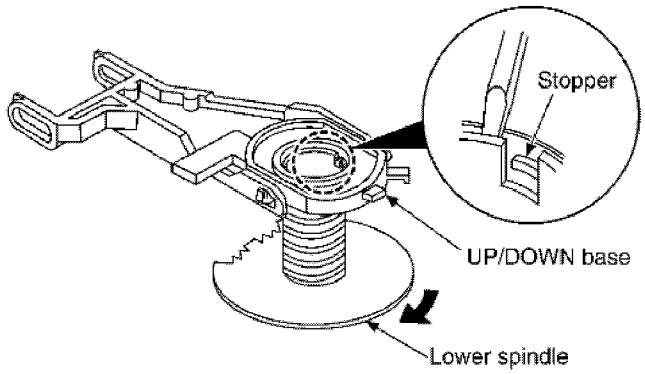

Step 13 Rotate the lower spindle in the direction of arrow until the lower spindle interferes with stopper.

Step 14 Insert the thin tip of minus screwdriver between the lower spindle and UP/DOWN base, and then slacken the lower spindle to release the stopper. Then, rotate the lower spindle and remove it.

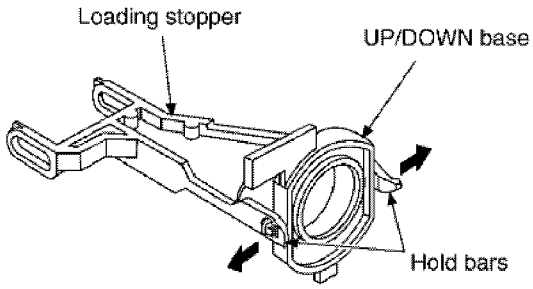

Step 15 Rotate the UP/DOWN base at a 90° angle. Then,

spread the hold bars of loading stopper and remove the UP/DOWN base.

[Installation for loading stopper ass'y]

Step 1 Align the claw of loading stoppers ass'y with the slot of spindle base. (Caution should be exercised when alignment of claw due to the size of claws.)

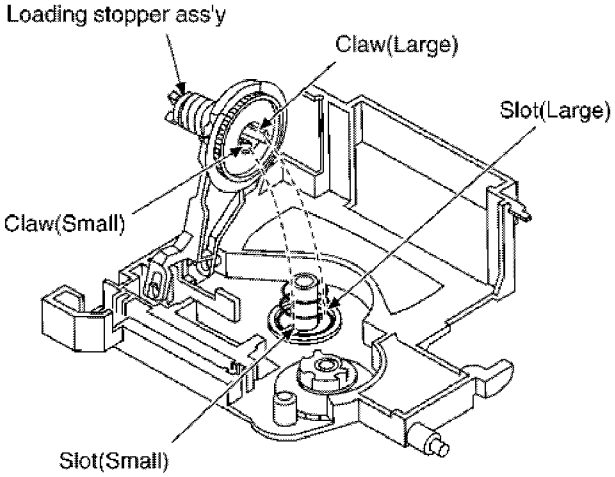

Step 2 Lower the loading stopper ass'y, and then align the lower spindle with the trapezoid tooth of relay gear A.

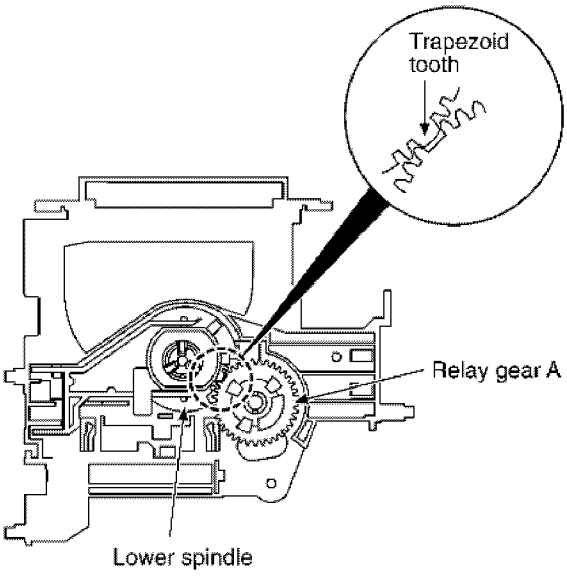

Step 3 Force the loading stopper ass'y, latch the claw firmly.

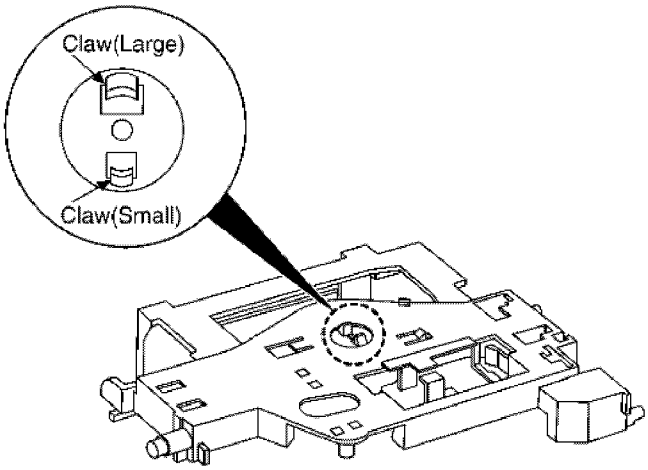

[Reassembly for mechanism base drive unit]

Step 1 Install the traverse cam gear.

Step 2 Rotate the traverse cam gear to the direction of arrow.

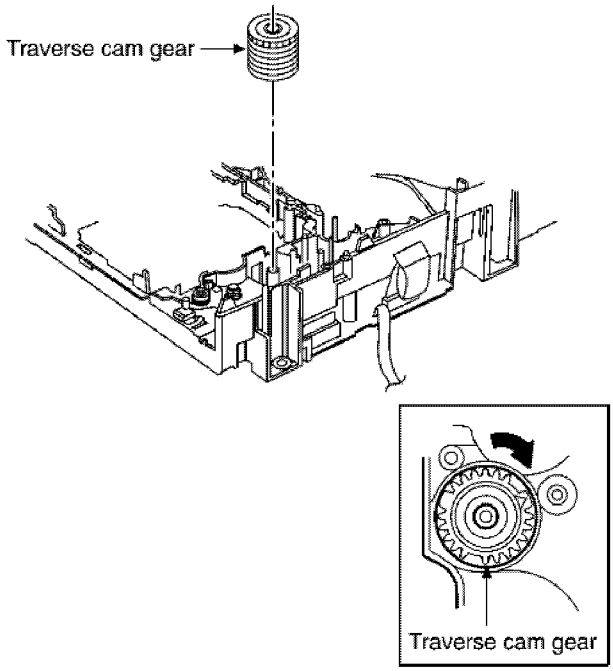

Step 3 Install the drive gear and traverse relay gear.

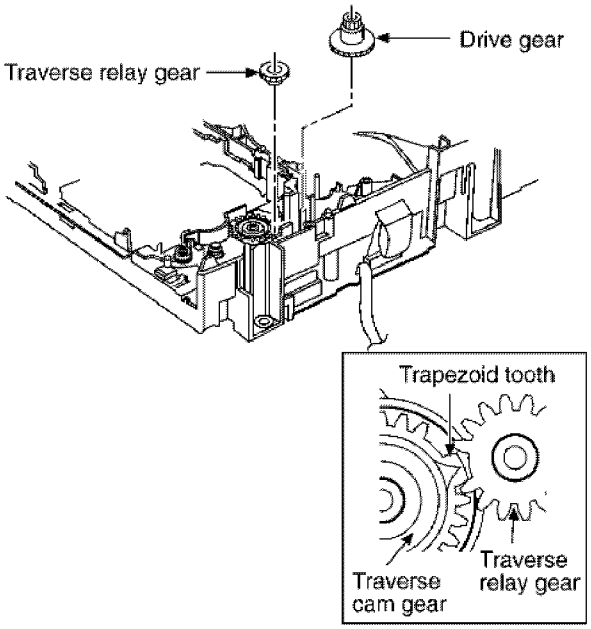

*When installing the traverse relay gear, align the trapezoid tooth of gear with tooth of traverse cam gear.

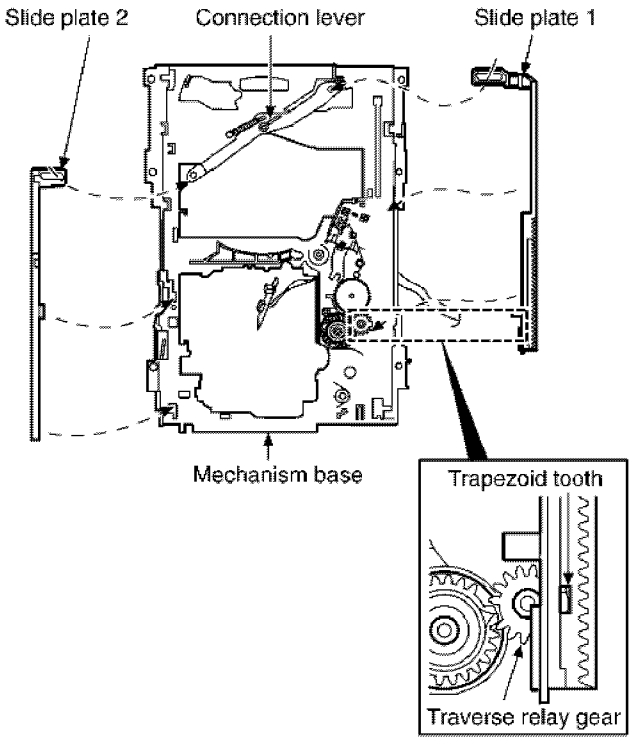

Step 4 Install the slide plate 2 to the mechanism base, and then match to the connection lever.

Step 5 Install the slide plate 1 to the mechanism base, and then match to the connection leve and align the trapezoid tooth of traverse relay gear with the slide plate 1.

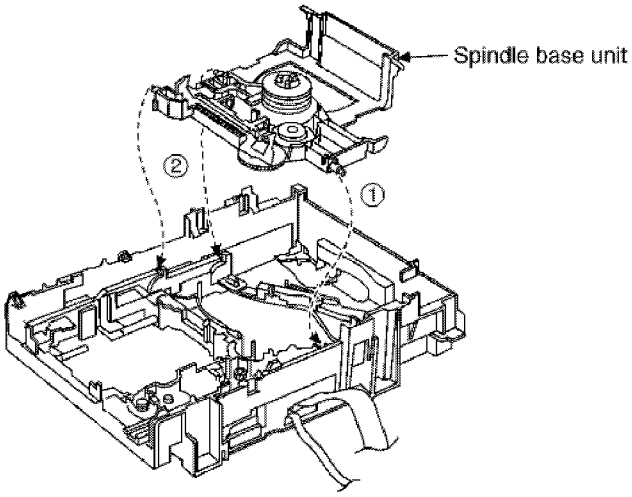

Step 6 Install the spindle base unit. (First, slide plate 1.)

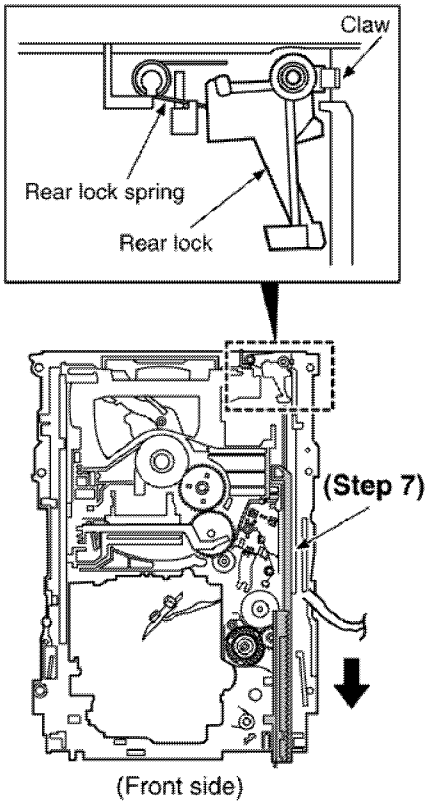

Step 7 Move the slide plate 1 to forward fully.

Step 8 Install the rear lock. (The claw should be latched.)

Step 9 Install the Spindle Position P.C.B.. (The claw should be latched.)

Step 10 Install the tray lock. (The claw should be latched.)

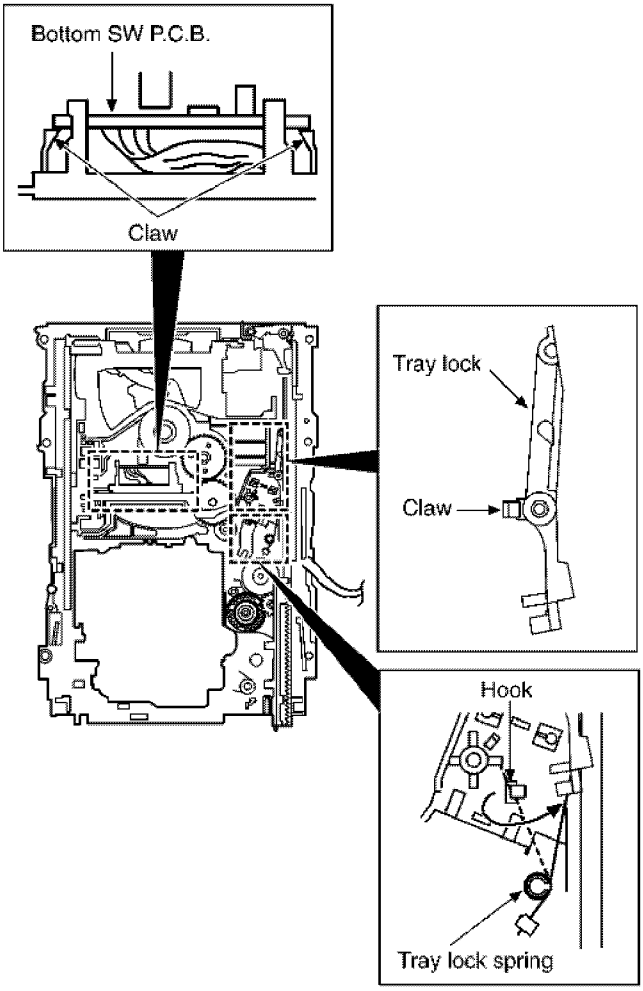

Step 11 Remove the tray lock spring from hook,and then latch to the tray lock.

Step 12 Install the UP/DOWN gear, change gear, change gear spring, pulley gear and belt in the order of (1) - (5).

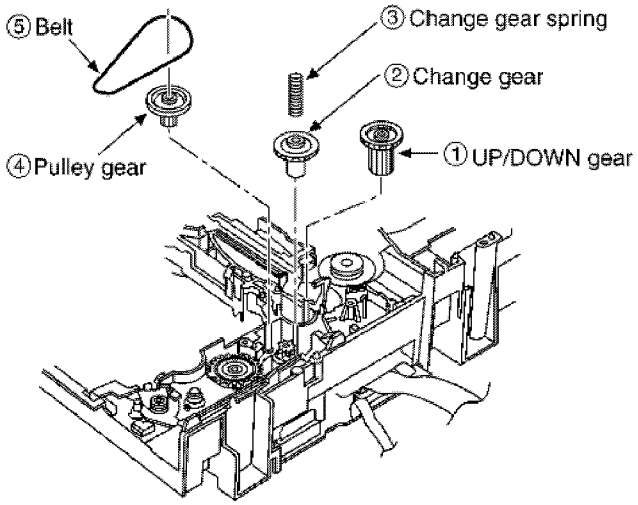

Step 13 Install the gear holder, and then tighten the screw (a).

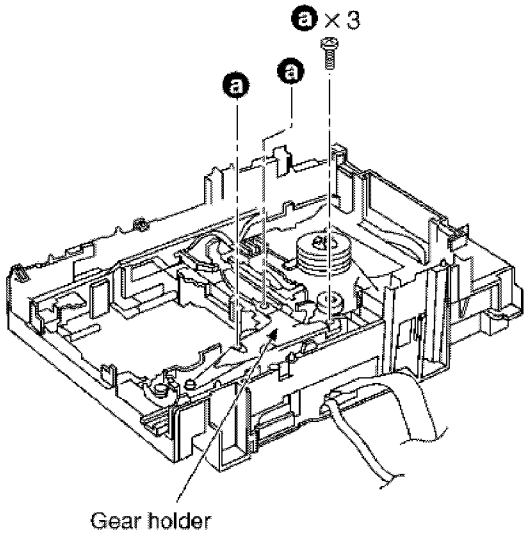

Step 14 Install the tray base, traverse ass'y, mechanism cover and upper plate.

[Operation check after servicing]

Check the proper operation of following items with gear and hexagonal screwdriver.

1. Open/close of tray base.
2. Moving the tray base to the stock side.
3. UP/DOWN operation of spindle base unit.
4. UP/DOWN operation of traverse ass'y.

10.7.4. Replacement for the motor ass'y

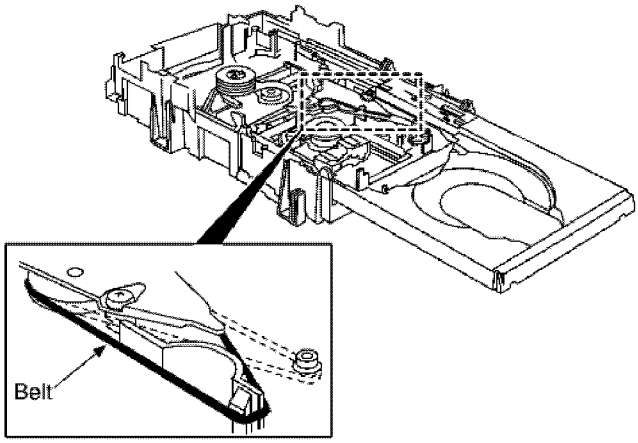

Step 1 Install the belt temporarily.

NOTE:

Take care not apply the grease to the belt.

Step 2 Upset the CD loading unit.

Step 3 Remove 3 screws.

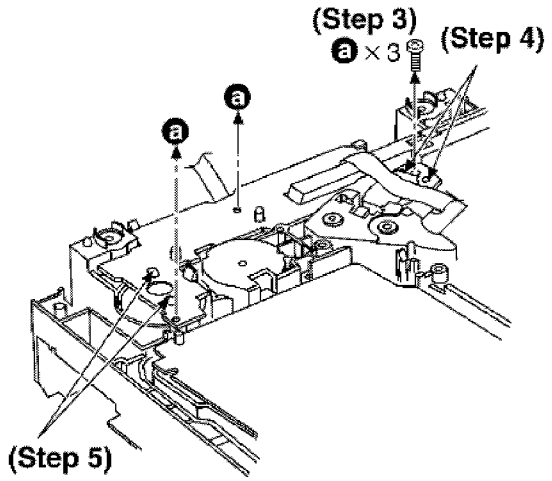

Step 4 Unsolder the plunger terminals (2 points).

Step 5 Unsolder the motor terminals (2 points).

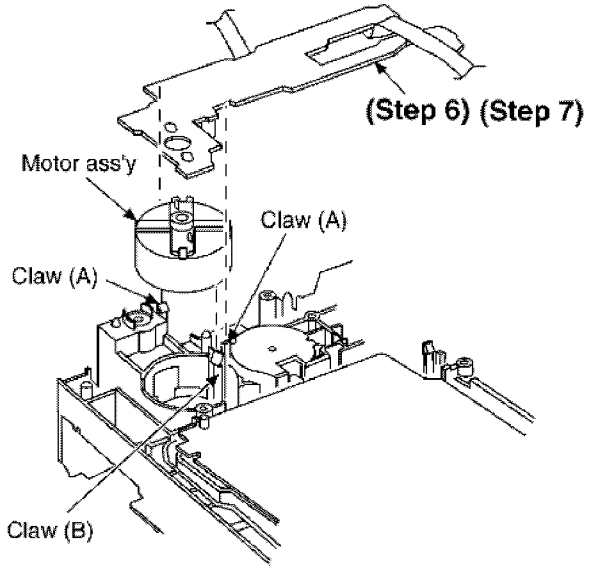

Step 6 Release the 2 claws (A), and then remove the Motor P.C.B.

Step 7 Release the claw (B), and then remove the motor ass'y.

[Notice for motor ass'y installation]

1. Locate the name plate of motor to the traverse ass'y.
2. Align the hole of motor with the ribs.

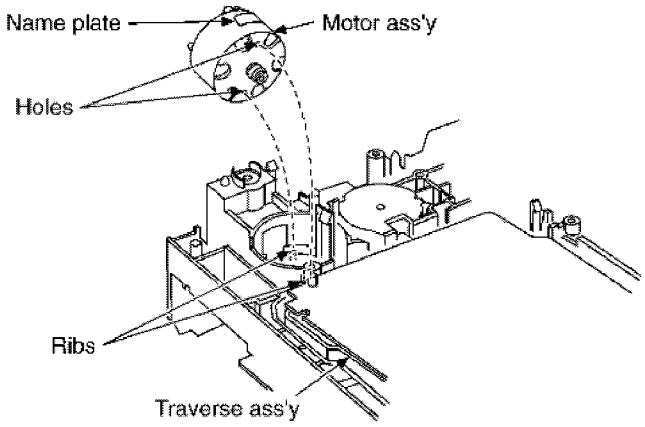

10.8. Replacement for the pinch roller ass'y and head block

- Follow the (Step 1) - (Step 2) of Item 10.2 - Disassembly of Top Cabinet and Rear Panel
- Follow the (Step 1) - (Step 5) of Item 10.2.1 - Disassembly for CD Lid
- Follow the (Step 1) - (Step 2) of Item 10.3 - Disassembly of the CD Mechanism Unit
- Follow the (Step 1) of Item 10.4 - Disassembly the Main P.C.B. & Transformer P.C.B.
- Follow the (Step 1) - (Step 2) of Item 10.5 - Disassembly of the Panel P.C.B. & Tact Switch P.C.B.
- Follow the (Step 1) - (Step 5) of Item 10.6 - Disassembly for the Deck Mechanism Unit & Deck P.C.B.

*** The mechanism as shown below is for DECK1. For the one of DECK 2, perform the same procedures.**

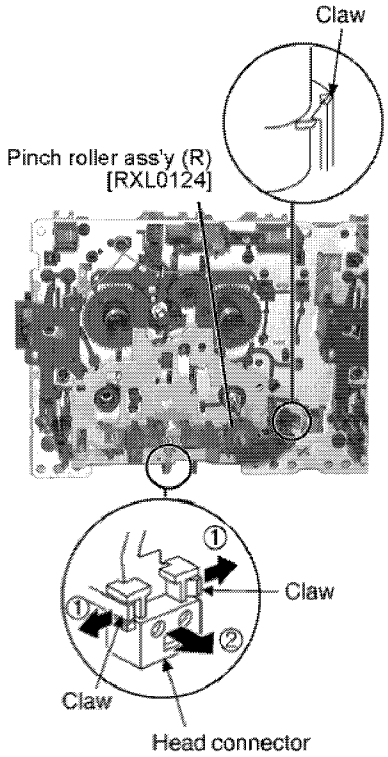

Step 1 Release the 2 claws, and then remove the pinch roller (R), (F).

Step 2 Release ther 2 claws, and then remove the head connector.

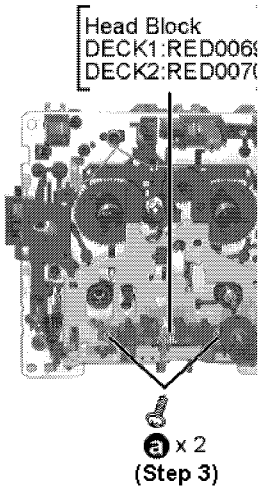

10.9. Replacement for and winding belt

- Follow the (Step 1) - (Step 2) of Ite Top Cabinet and Rear Panel
- Follow the (Step 1) - (Step 5) of Ite for CD Lid
- Follow the (Step 1) - (Step 2) of Ite the CD Mechanism Unit
- Follow the (Step 1) of Item 10.4 · P.C.B. & Transformer P.C.B.
- Follow the (Step 1) - (Step 2) of Ite the Panel P.C.B. & Tact Switch P.
- Follow the (Step 1) - (Step 5) of Iter the Deck Mechanism P.C.B.

Step 1 Release the 2 claws, and connector.

Step 2 De-solder plunger point.

Step 3 Remove the Deck Mechanism

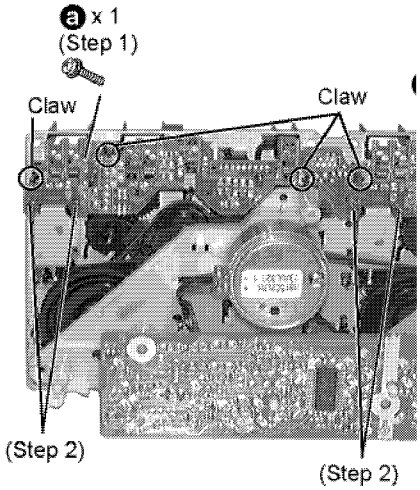

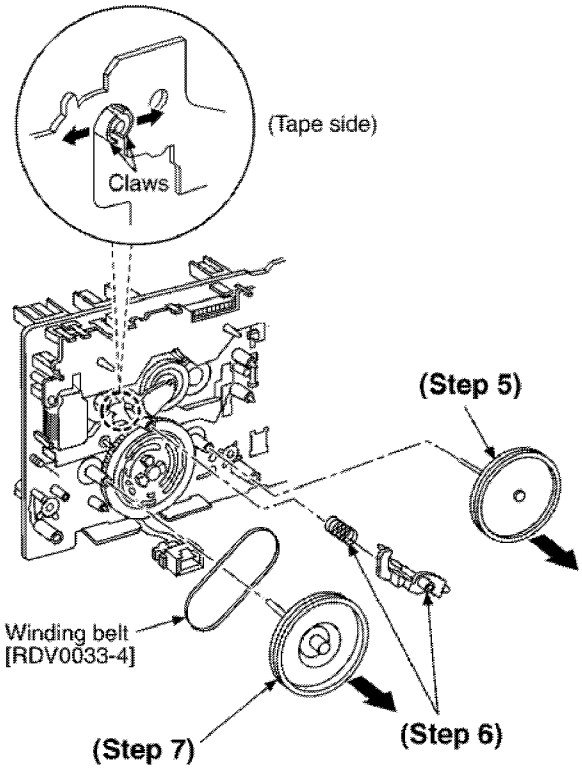

Step 5 Remove the flywheel R.

Step 6 Release the claw of tape side, and then remove the winding lever and spring.

Step 7 Remove the flywheel F.

[Installation of the belt]

Step 1 The boss and marking should be positioned horizontally.

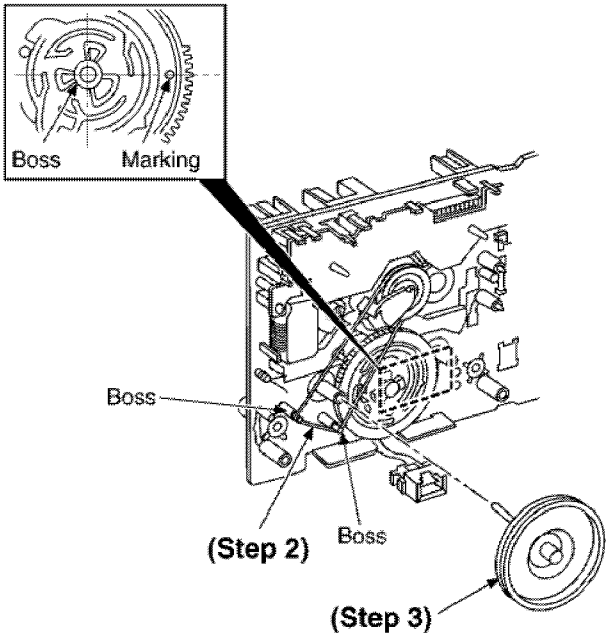

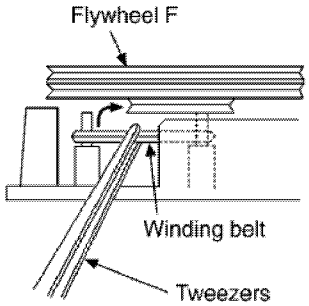

Step 2 Put the winding belt on the pulley temporarily.

Step 3 Install the flywheel F.

Step 4 Put the winding belt on the flywheel F.

Step 5 Install the winding lever and spring while pressing the winding arm in the direction of arrow.

Step 6 Install the flywheel R.

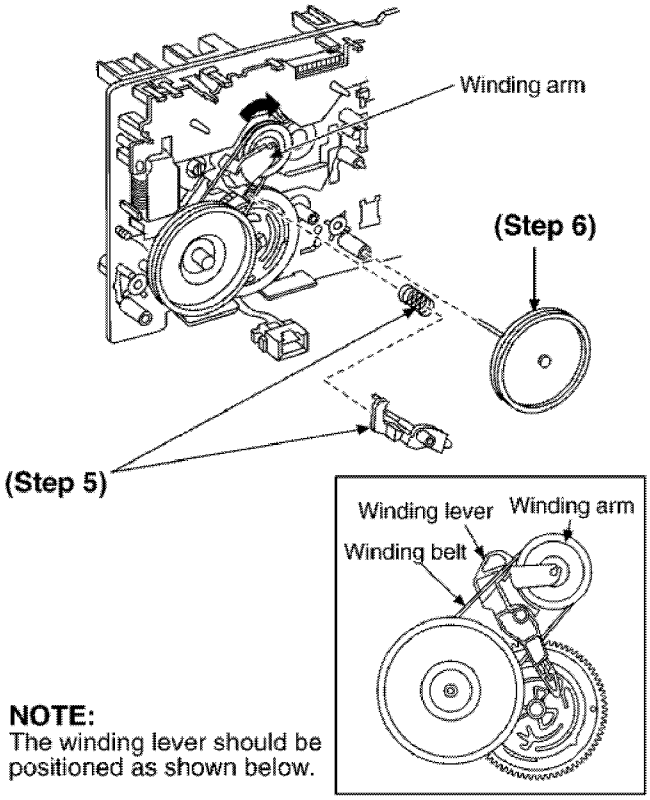

NOTE:
The winding lever should be positioned as shown below.

Step 7 Put the capstan belt A temporarily as shown below.

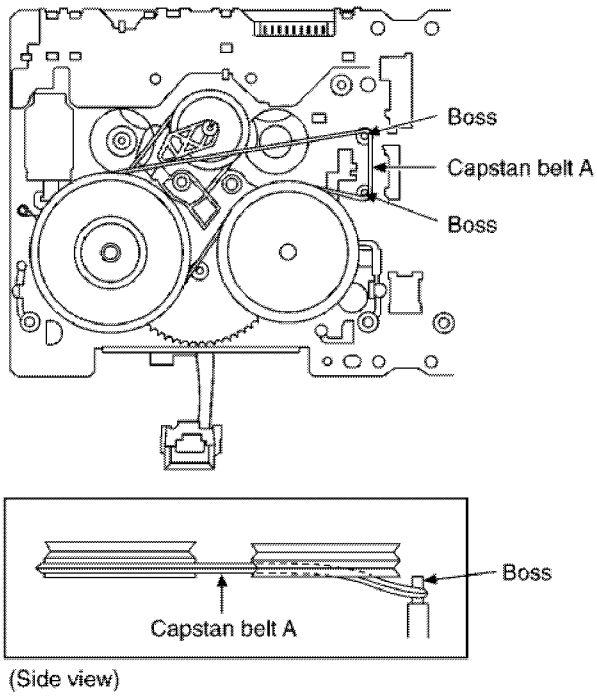

Step 8 Put the capstan belt B on the motor ass'y pulley.

Step 9 Install the sub chassis to the mechanism, and then tighten screws.

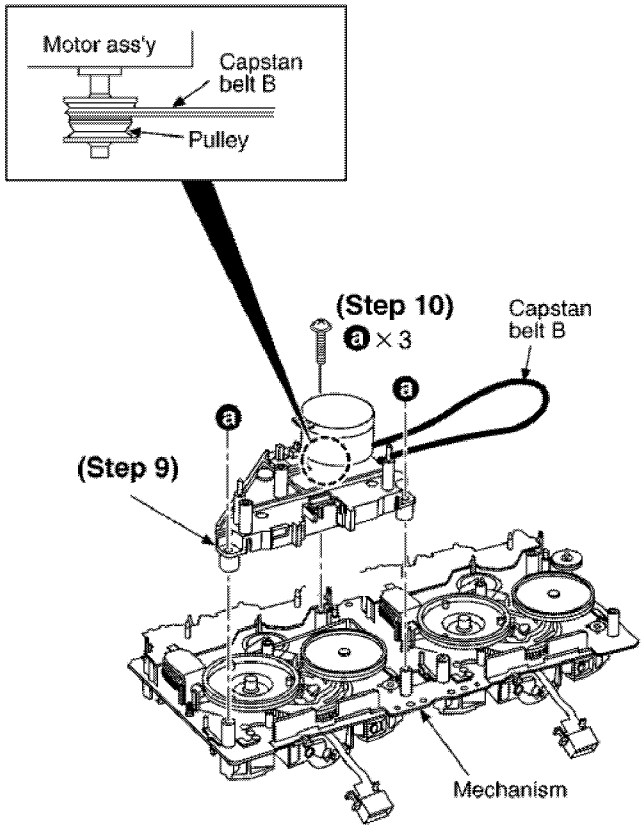

Step 10 Remove 3 screws.

Step 11 Put the capstan belt B as shown below.

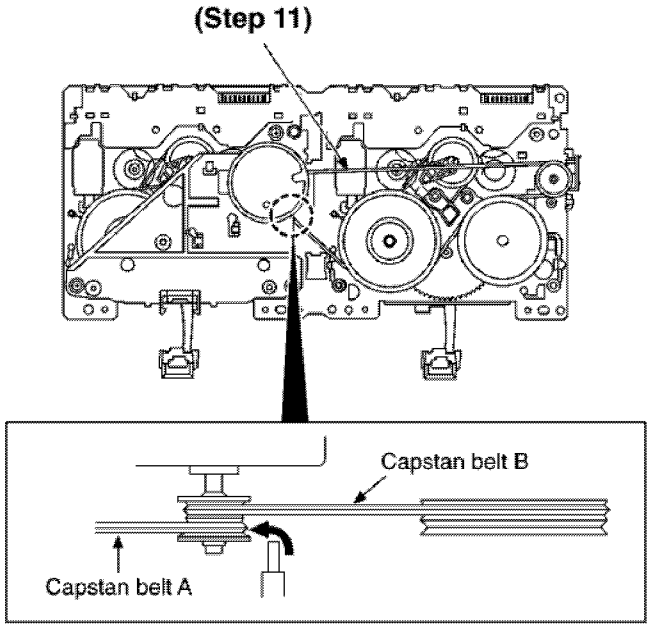

Step 12 Put the capstan belt A on the motor ass'y pulley.

10.10. Replacement for the cassette lid ass'y

- Follow the (Step 1) - (Step 2) of Item 10.2 - Disassembly of Top Cabinet and Rear Panel

Step 1 Push the lever upward, open the cassette lid ass'y. (For DECK1 and DECK2)

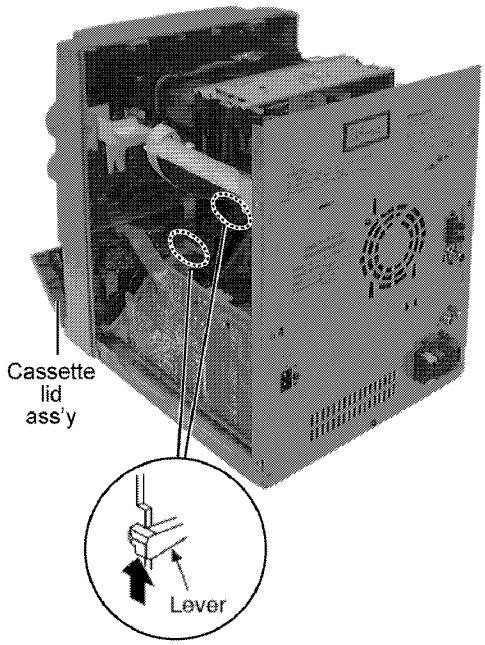

Step 2 Lift up the cassette lid ass'y in the direction of arrow. (For DECK1 and DECK2).

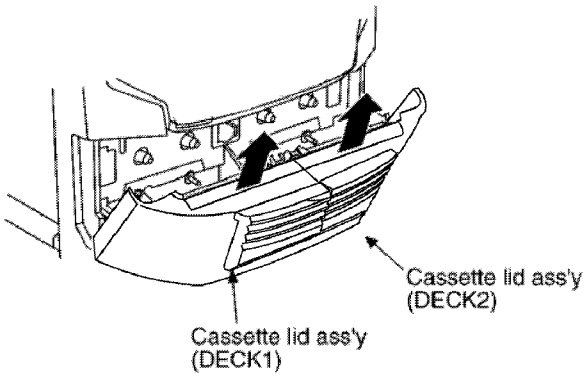

Step 3 Remove the cassette lid ass'y. (For DECK1 and DECK2).

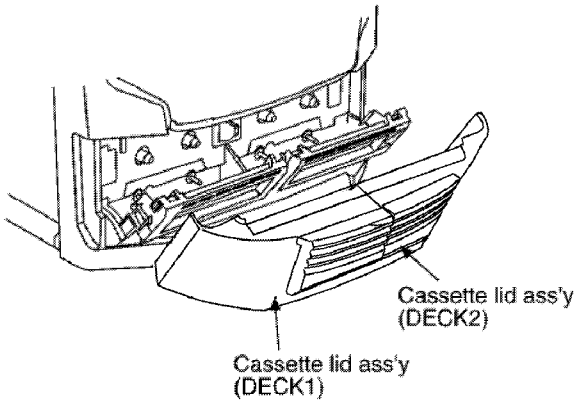

10.11. Measure for tape trouble

- Follow the (Step 1) - (Step 2) of Item 10.2 - Disassembly of Top Cabinet and Rear Panel

Step 1 If a cassette tape cannot be removed from the deck since the tape is caught by the capstan or pinch roller during playback or recording, rotate the flywheel F in the direction of the arrow to remove the tape.

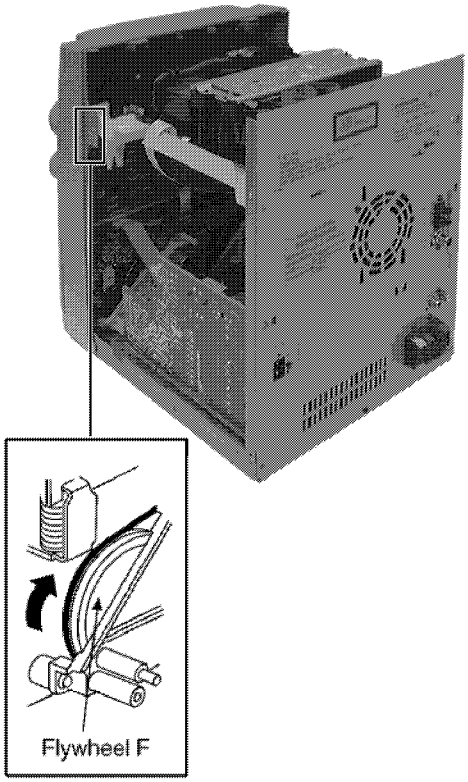

Step 2 Push the lever upward and open the cassette lid ass'y. Take the cassette tape off.

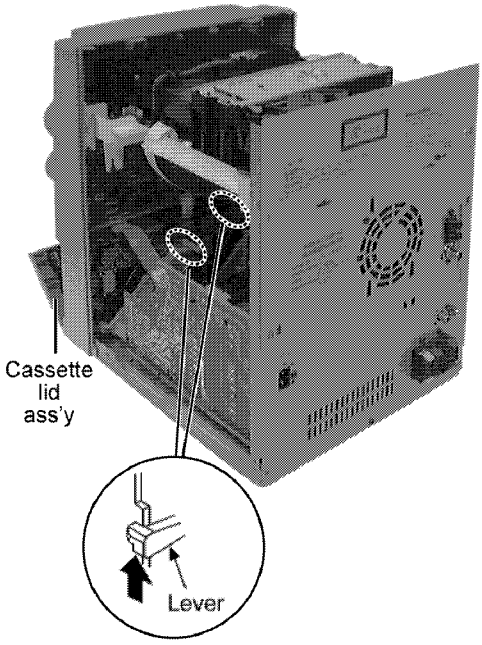

11 Service Position

11.1. Checking Procedure

Note:

For the disassembling procedure, see Section 10.

11.2. Checking the Main P.C.B., Power P.C.B. and Transformer P.C.B.

1. Remove Top Cabinet and Rear Panel.
2. Remove CD Lid.
3. Remove CD Mechanism Unit.
4. Connect FFC board (CN309 & CN310) from CD Mechanism Unit.

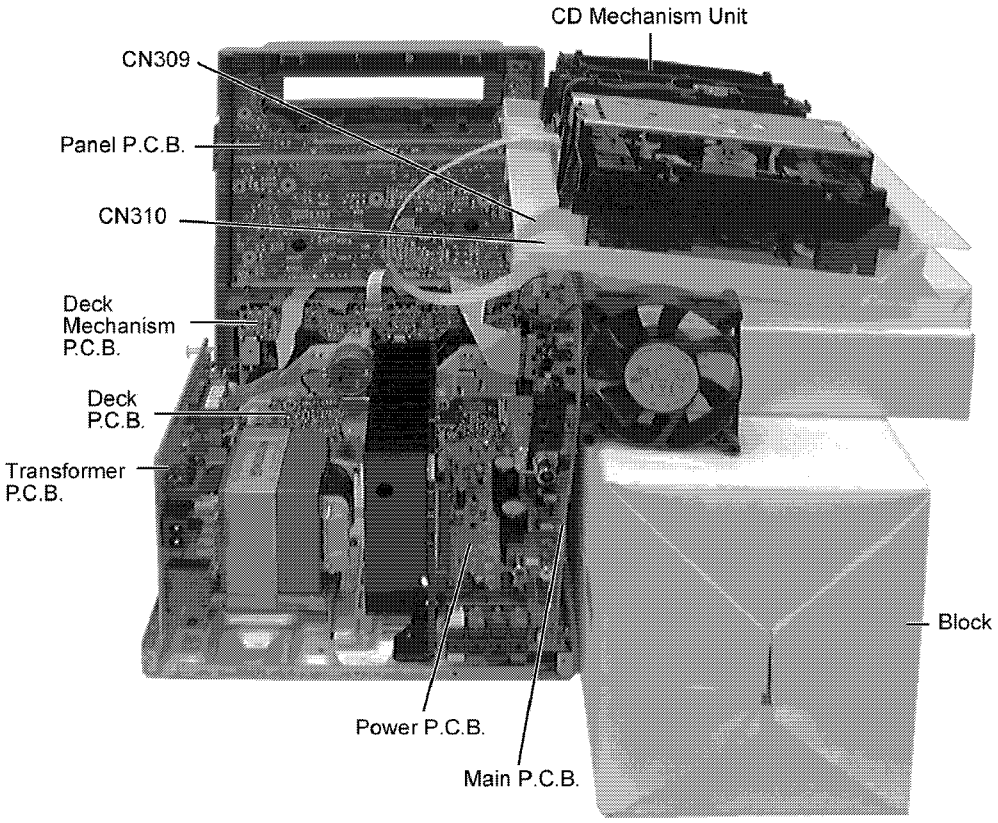

11.3. Checking the Panel, Tact Switch, Deck & Deck Mechanism P.C.B.

1. Remove Top Cabinet and Rear Panel.
2. Remove CD Lid.
3. Remove CD Mechanism Unit.
4. Remove volume knob at front panel.
5. Remove Panel P.C.B. & Tact Switch P.C.B.
6. Remove Deck Mechanism Unit.
7. Use the extension cable (REEX0310 - 10 Pins) to reconnect (CP600) Panel P.C.B. and (CN971) Deck Mechanism P.C.B.

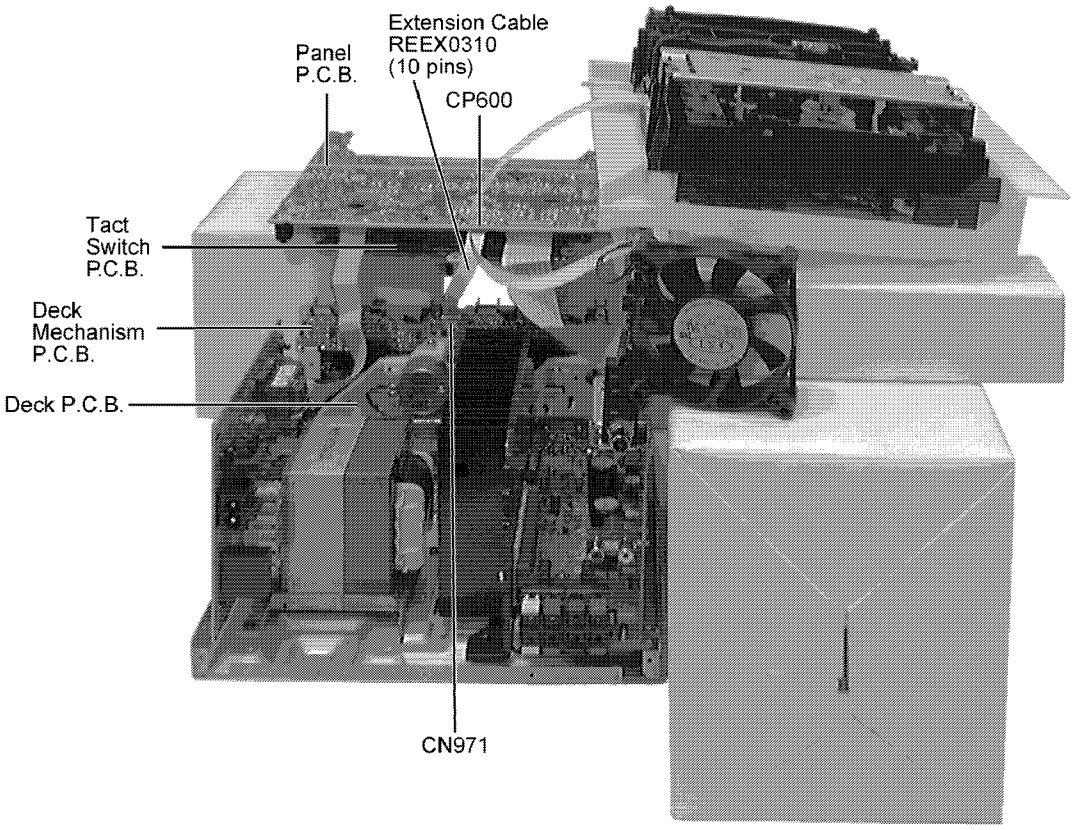

Service Tools	
Extension FFC Panewl P.C.B. - Deck Mechanism P.C.B.	REEX0310 (10 Pins)

12 Description of Error Code

12.1. Abnormality detection for Deck Mechanism block

No.	Abnormal Items	Error Display	Method of Detection
1	MODE SW abnormal	H01	Normal operation during mecha transition, MODE SW abnormal is memorized. The content of abnormality can be confirmed in the abnormal detection mode explained in the later section.
2	REC INH SW abnormal	H02	The contect of abnormality can be confirmed in the abnormal detection mode explained in the later section.
3	HALF SW abnormal	H03	The contect of abnormality can be confirmed in the abnormal detection mode explained in the later section.
4	Reel pulse abnormal	F01	The contect of abnormality can be confirmed in the abnormal detection mode explained in the later section.

12.2. Abnormality detection for CD/Changer block

No.	Abnormal Items	Error Display	Method of Detection
1	REST SW abnormal	F15	Under normal operation (Self-Diagnostic Mode inclusive), this error occurs when the REST SW ON is not detected within the specified time and shall be memorized.
2	Transmission error between CD servo LSI and micon	F26	Under normal operation (Self-Diagnostic Mode inclusive), this error occurs when the selection is set to CD and SENSE='H' is detected and SENSE='L' is not detected within a fail safe time (20ms) after system command transmission was sent.
3	CLAMP SW abnormal	F16	Refer to CR20 control specification section 5-2 [ERROR CODE] table M-0A error is detected.
4	BOTTOM SW abnormal	F17	Refer to CR20 control specification section 5-2 [ERROR CODE] table M-09 error is detected.
5	POSITION SW abnormal	F27	Refer tp CR20 control specification section 5-2 [ERROR CODE] table M-05 ~ M-08 error is detected.
6	SW1 abnormal	F28	Refer to CR20 control specification section 5-2 [ERROR CODE] table M-02 ~ M-08 error is detected.
7	SW2 abnormal	F29	Refer to CR20 control specification section 5-2 [ERROR CODE] table M-02 ~ M-08 error is detected.
8	OPEN SW abnormal	H15	Refer to CR20 control specification section 5-2 [ERROR CODE] table M-01 error is detected.

12.3. Power Supply related error detection

No.	Abnormal Items	Error Display	Method of Detection
1	POWER AMP output abnormal	F61	During normal operation, if DCDET 1/2 becomes 'L', normal POWER OFF process shall not be executed, PCNT shall be switched to 'L' immediately. GOODBYE shall not be displayed and the error display F61 will be displayed instead. 2 seconds after the F61 display, ECONO shall be set to 'L' and FL display shall be turned off. The error content shall be memorized when the abnormality occurs and can be displayed in the C-mecha self-diagnostic mode described later.

13 Self-Diagnostic Function

13.1. Self-diagnostic display

This unit is equipped with a self-diagnostic display function which, if a problem occurs, will display an error code corresponding to the problem.

Use this function when performing maintenance on the unit.

13.2. How to enter the Self-Diagnostic Function

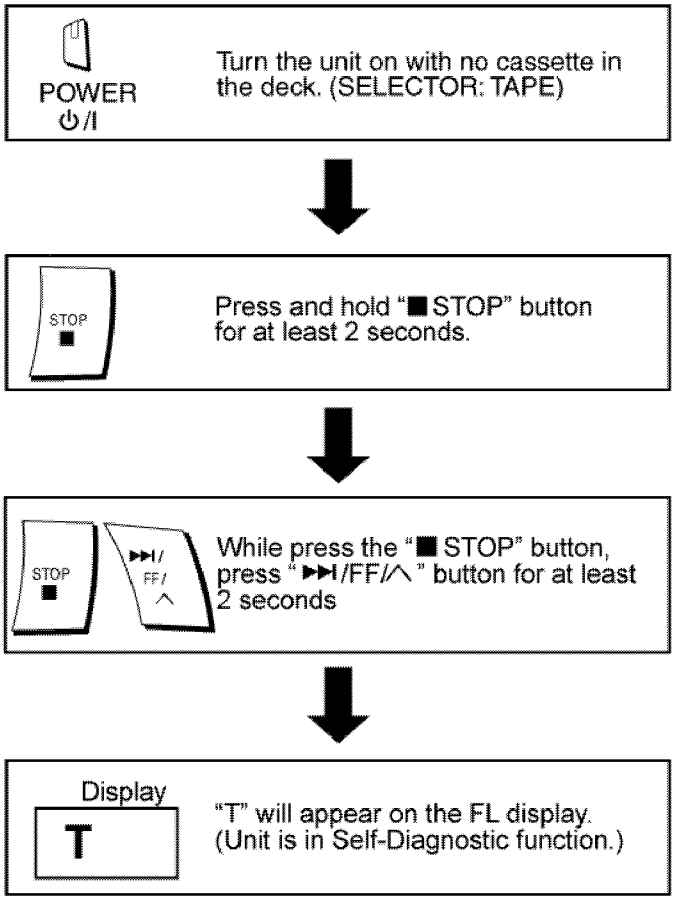

13.3. Cassette Mechanism Test (For error code H01, H02, H03, F01, F02)

1. Press "TAPE, DECK 1/2" to select Deck 2.
2. Load a cassette tape with the erasure prevention tab, remove from left side only and close the cassette holder.
3. Press "FAST FORWARD MEMORY" (Tape will be stop after 2 seconds)
4. Load a cassette tape with the erasure prevention tab, remove from right side only and close the cassette holder.
5. Press "REVERSE FM MODE/BP" (Tape will be stop after 2 seconds)
6. Load a pre-recorded tape with both side record tabs intact and close the cassette holder.
7. Press "PLAY/TUNE/TIME ADJ UP" (After TPS function, tape will stop automatically)
8. Press "REC/STOP" (Tape will not move)
9. Press "STOP/TUNE MODE" to indicate Error code.
   - If several problem exist, error code will change each time when "■ /STOP" is pressed.
     (e.g. H01 → H03 → F01 .....etc.)
10. Press "TAPE, DECK 1/2" to select Deck 1.
11. Repeat step 2 to 9 to test Deck 1. (Tape Deck 1 will not check H02 because of no recording function)

13.4. CD Mechanism Test (F15, F26, F16, F17, F27, F28, F29, H15)

1. Press “CD”.
2. Press “OPEN/CLOSE (1)” and place a CD.
3. Press “OPEN/CLOSE (1)” to close the tray.
4. Press “OPEN/CLOSE (5)” and wait until the tray is open.
5. Press “OPEN/CLOSE (1)” and remove the CD.
6. Press “OPEN/CLOSE (1)” to close the tray.
7. Press “■/STOP” to indicate Error Code.
   - If several problem exist, error code will change each time when “■/STOP” is pressed. (e.g. F15 → F26 → F16 ....etc).

13.5. To clear all Error code

1. Press “STOP/TUNE MODE” button for 5 seconds.
2. FL indicator shows “CLEAR” for 1 second and change to “T”.

13.6. How to get out from Self-Diagnostic function

1. Press “Power” button OFF.

13.7. Power Amplifier Failure (F61)

1. When power amplifier fail, F61 will indicate automatically.

14 CD Test Mode Function

This CD test mode is provided to check CD unit without connecting to changer loading mechanism. This mode shall operate CD PLAY with CD unit being connected only and CD Automatic Alignment result is shown on FL display.

14.1. How to set CD test mode

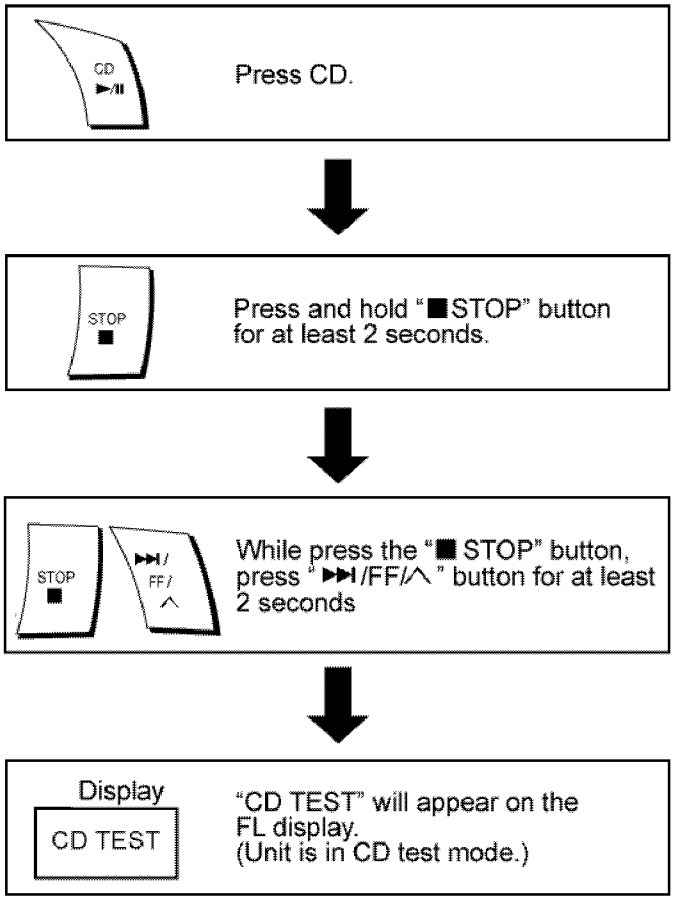

14.2. CD Automatically Adjustment result indication

Under CD test mode, pressing the numeric key '0' on the remote controller will display the auto adjustment result. FLOCK, TLOCK and CLVS status shall be shown as below:

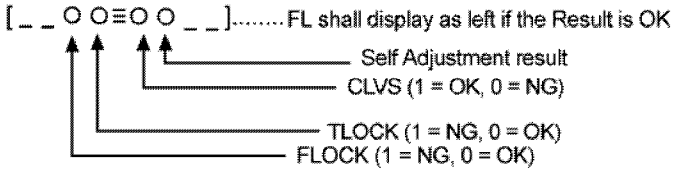

During the above display, executing CD PLAY will display auto adjustment result for CD PLAY mode.

15 Measurements and Adjustments

15.1. Cassette Deck Section

- Measurement Condition
  - Make sure head, capstan and press roller are clean.
  - Judgeable room temperature 20 ± 5 °C (68 ± 9°F)
- Measuring instrument
  - EVM (DC Electronic voltmeter)
  - Digital frequency counter
- Test Tape
  - Tape speed gain adjustment (3 kHz, -10 dB); QZZCWAT

15.1.1. Tape Speed Adjustment (Deck 1/2)

1. Set the tape edit button to "NORMAL" position.
2. Insert the test tape (QZZCWAT) to DECK 2 and playback (FWD side) the middle portion of it.
3. Adjust Motor VR (DECK 2) for the output value shown below.

   Adjustment target: 2940 ~ 3060 Hz (NORMAL speed)

4. After alignment, assure that the output frequency of the DECK 1 FWD are within ±60 Hz of the value of the output frequency of DECK 2 FWD.

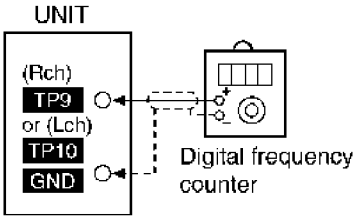

Fig.1

15.1.2. Bias and Erase Voltage Check

1. Set the unit "AUX" position.
2. Insert the Normal blank tape (QZZCRA) into DECK 2 and the unit to "REC" mode (use "● REC/STOP" key).
3. Measure and make sure that the output is within the standard value.

Bias voltage for Deck 2	14±4mV (Normal)
Erase voltage for Deck 2	80mV (Normal)

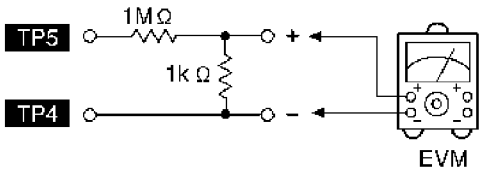

Fig.2

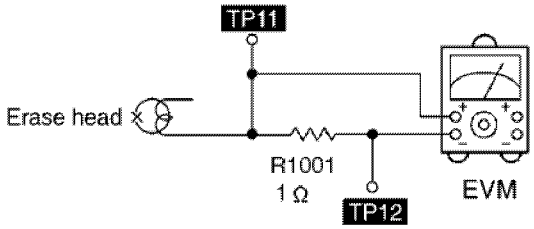

Fig.3

15.1.3. Bias Frequency Adjustment (Deck 1/2)

1. Set the unit to "AUX" position.
2. Insert the Normal blank tape (QZZCRA) into DECK 2 and set the unit to "REC" mode (● use "REC/STOP" key).
3. Adjust L1002 so that the output frequency is within the standard value.

   Standard Value: 97 ±8 kHz

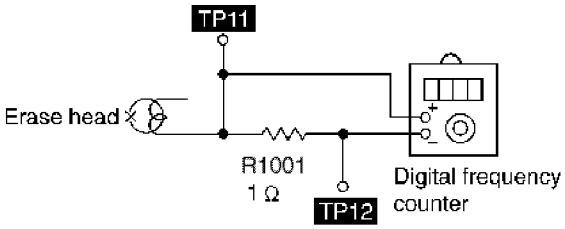

Fig.4

15.2. Tuner Section

15.2.1. AM-IF Alignment

1. Connect the instrument as shown in Fig.5.
2. Set the unit to AM mode.
3. Apply signal as shown in Fig. 5 from AM-SG.
4. Adjust Z102 so that the output frequency is maximized in Fig. 6.

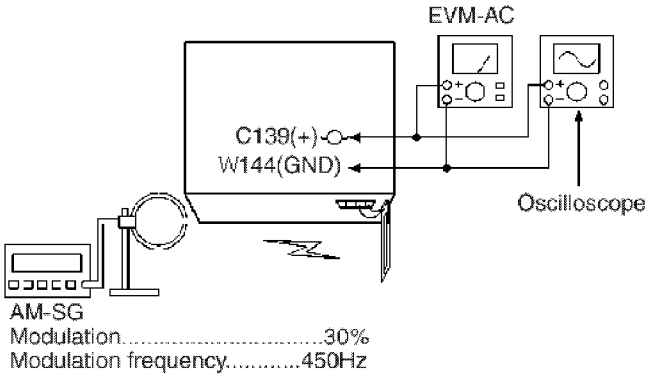

Fig.5

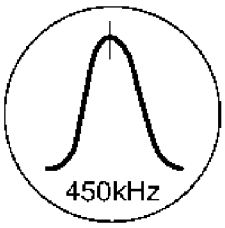

Fig.6

15.2.2. AM RF Adjustment

1. Connect the instrument as shown in Fig. 7.
2. Set the unit to AM mode.
3. Set AM-SG to 520kHz.
4. Receive 520kHz in the unit.
5. Adjust Z101 (OSC) so that the EVM-AC is maximized.
6. Set AM-SG to 600Hz.
7. Receive 600Hz in the unit.
8. Adjust Z101 (ANT) so that the EVM-SG is maximized.
9. Set AM-SG to 520kHz.
10. Receive 520kHz in the unit.
11. Adjust Z101 (OSC) so that the EVM-DC value is with 1.1±0.5V.

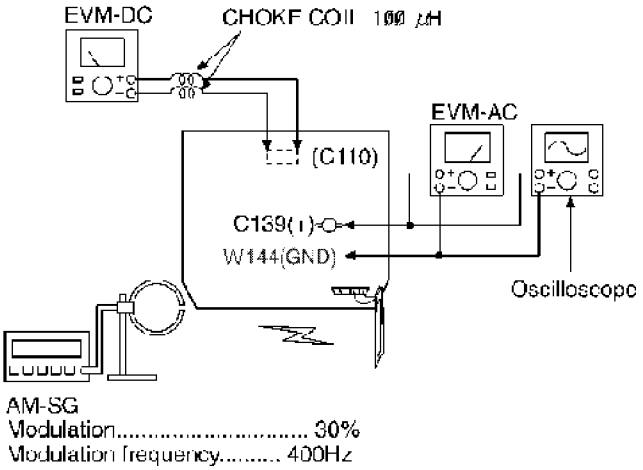

Fig.7

15.3. Alignment Points

15.3.1. Cassette Deck Section

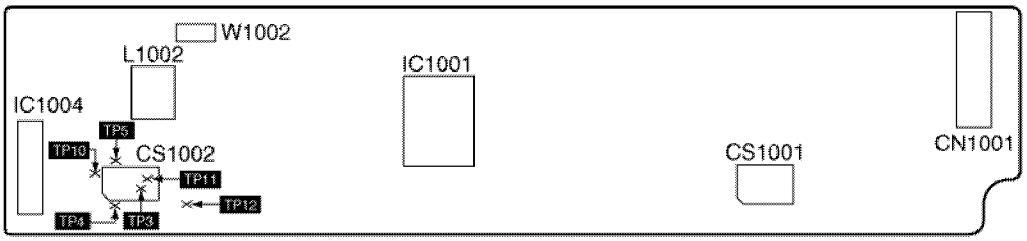

15.3.2. Adjustment Point

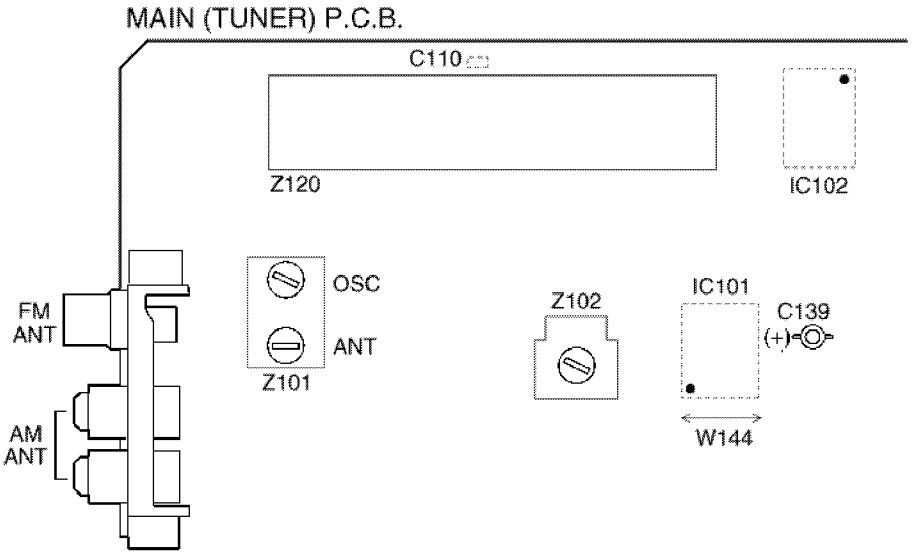

16 Block Diagram

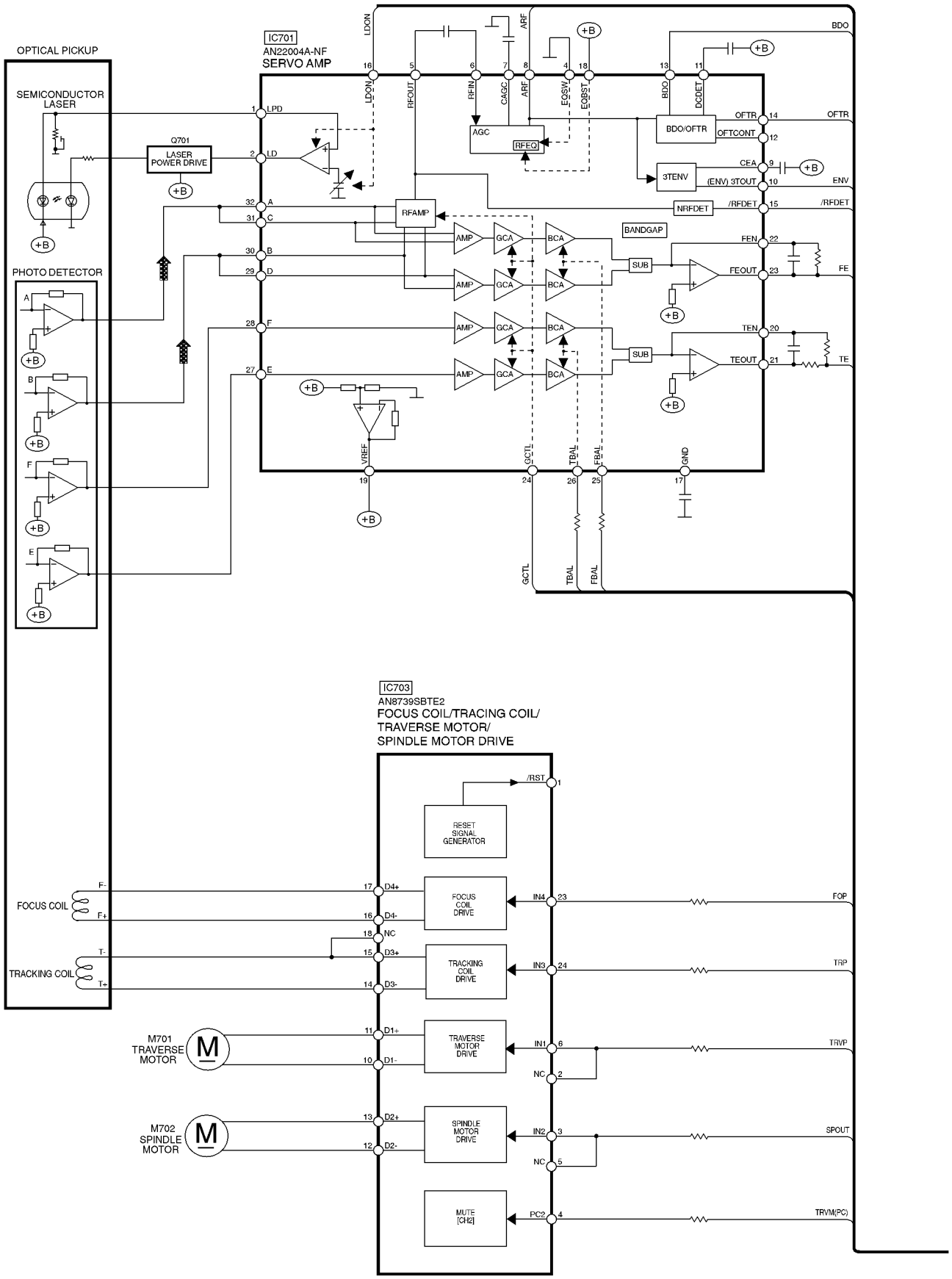

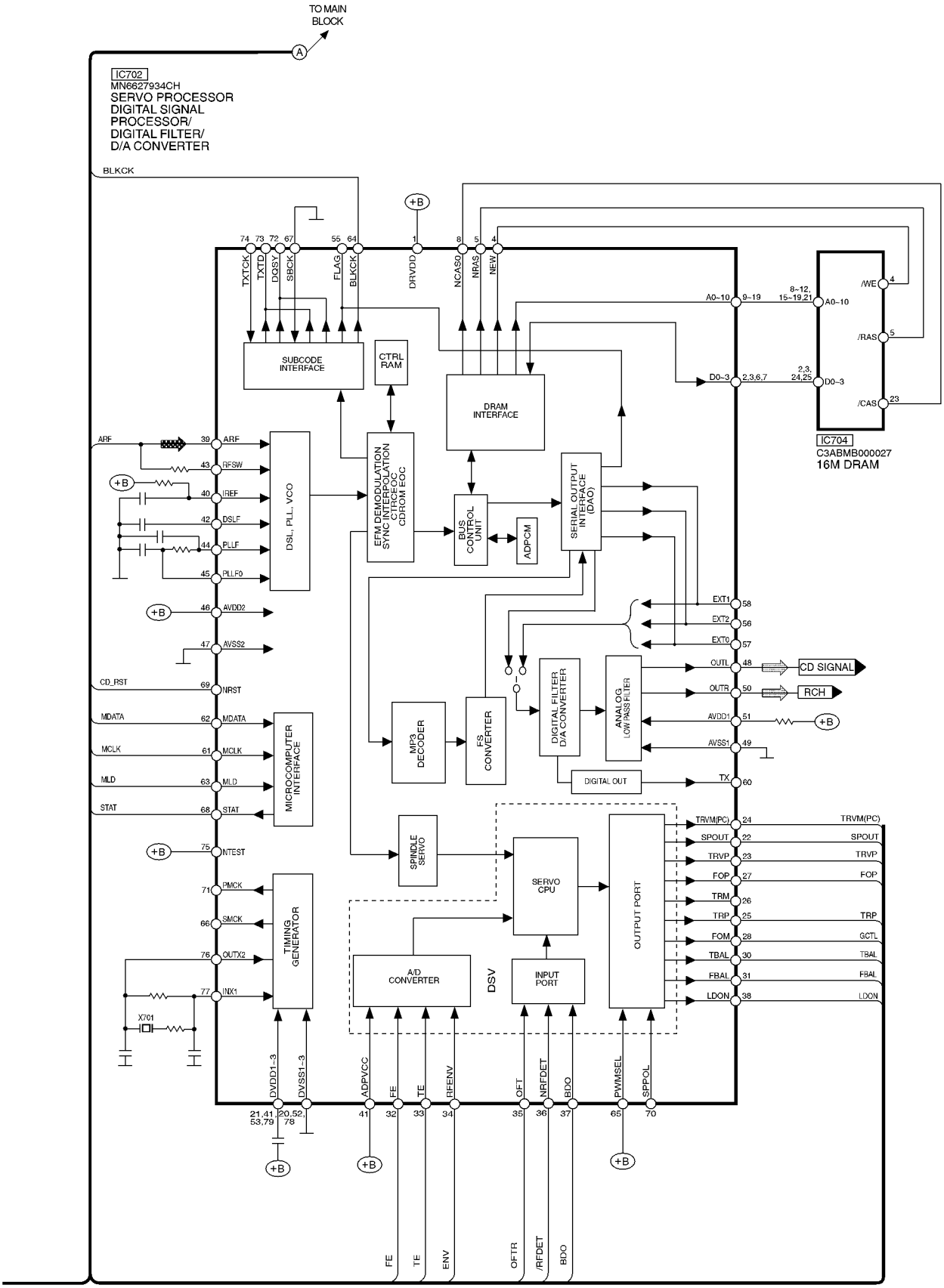
TO MAIN BLOCK
IC702
MN6627934CH
SERVO PROCESSOR
DIGITAL SIGNAL PROCESSOR/
DIGITAL FILTER/
D/A CONVERTER
BLKCK
TXTCK
TXTD
DQSY
SBCK
FLAG
DRVDD
NCAS0
NRAS
NEW
SUBCODE INTERFACE
CTRL RAM
DRAM INTERFACE
EFM DEMODULATION SYNC INTERPOLATION CTRCEOC CDROM EOC
BUS CONTROL UNIT
ADPCM
SERIAL OUTPUT INTERFACE (DAO)
DSL, PLL, VCO
ARF
RFSW
IREF
DSLF
PLLF
PLLF0
AVDD2
AVSS2
CD_RST
NRST
MDATA
MCLK
MLD
STAT
MICROCOMPUTER INTERFACE
NTEST
PMCK
SMCK
OUTX2
INX1
TIMING GENERATOR
X701
MP3 DECODER
FS CONVERTER
DIGITAL FILTER D/A CONVERTER
ANALOG LOW PASS FILTER
DIGITAL OUT
EXT1
EXT2
EXT0
OUTL
OUTR
AVDD1
AVSS1
TX
CD SIGNAL
RCH
SPINDLE SERVO
SERVO CPU
OUTPUT PORT
A/D CONVERTER
DSV
INPUT PORT
TRVM(PC)
SPOUT
TRVP
FOP
TRM
TRP
FOM
TBAL
FBAL
LDON
GCTL
DVDD1~3
DVSS1~3
ADPVCC
FE
TE
RFENV
OFT
NRFDET
BDO
PWMSEL
SPPOL
ENV
OFTR
/RFDET
A0~10
D0~3
/WE
/RAS
/CAS
IC704
C3ABMB000027
16M DRAM

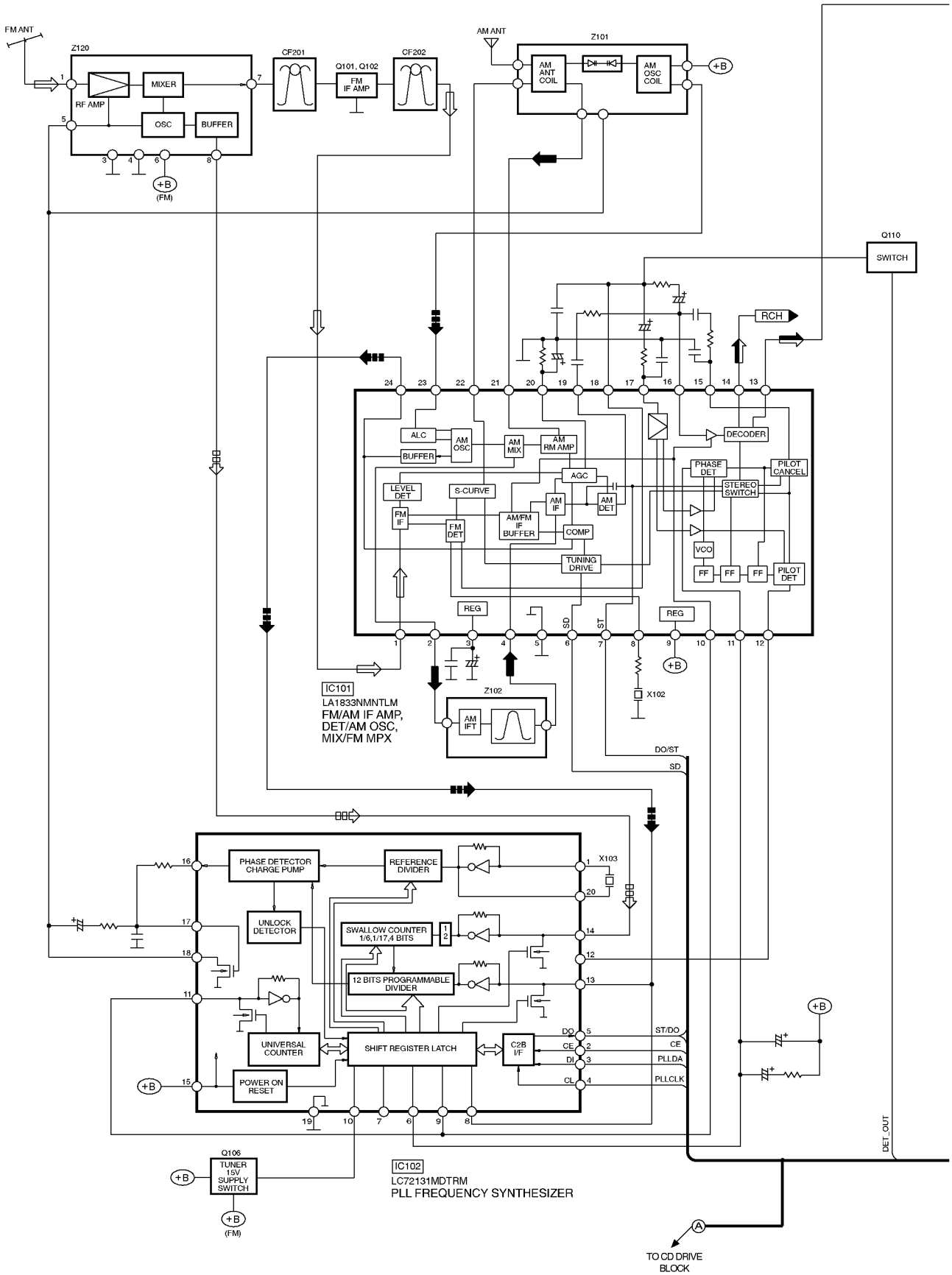
FM ANT
Z120
MIXER
RF AMP
OSC
BUFFER
CF201
Q101, Q102
FM IF AMP
CF202
AM ANT
Z101
AM ANT COIL
AM OSC COIL
+B
(FM)
Q110
SWITCH
RCH
ALC
AM OSC
AM MIX
AM RM AMP
BUFFER
DECODER
PHASE DET
PILOT CANCEL
AGC
STEREO SWITCH
LEVEL DET
S-CURVE
AM IF
AM DET
FM IF
FM DET
AM/FM IF BUFFER
COMP
VCO
TUNING DRIVE
FF
PILOT DET
REG
SD
ST
X102
IC101
LA1833NMNTLM
FM/AM IF AMP,
DET/AM OSC,
MIX/FM MPX
Z102
AM IFT
DO/ST
SD
PHASE DETECTOR CHARGE PUMP
REFERENCE DIVIDER
X103
UNLOCK DETECTOR
SWALLOW COUNTER 1/6,1/17,4 BITS
12 BITS PROGRAMMABLE DIVIDER
UNIVERSAL COUNTER
SHIFT REGISTER LATCH
C2B I/F
POWER ON RESET
DO
CE
DI
CL
ST/DO
CE
PLLDA
PLLCLK
Q106
TUNER 15V SUPPLY SWITCH
IC102
LC72131MDTRM
PLL FREQUENCY SYNTHESIZER
DET_OUT
TO CD DRIVE BLOCK

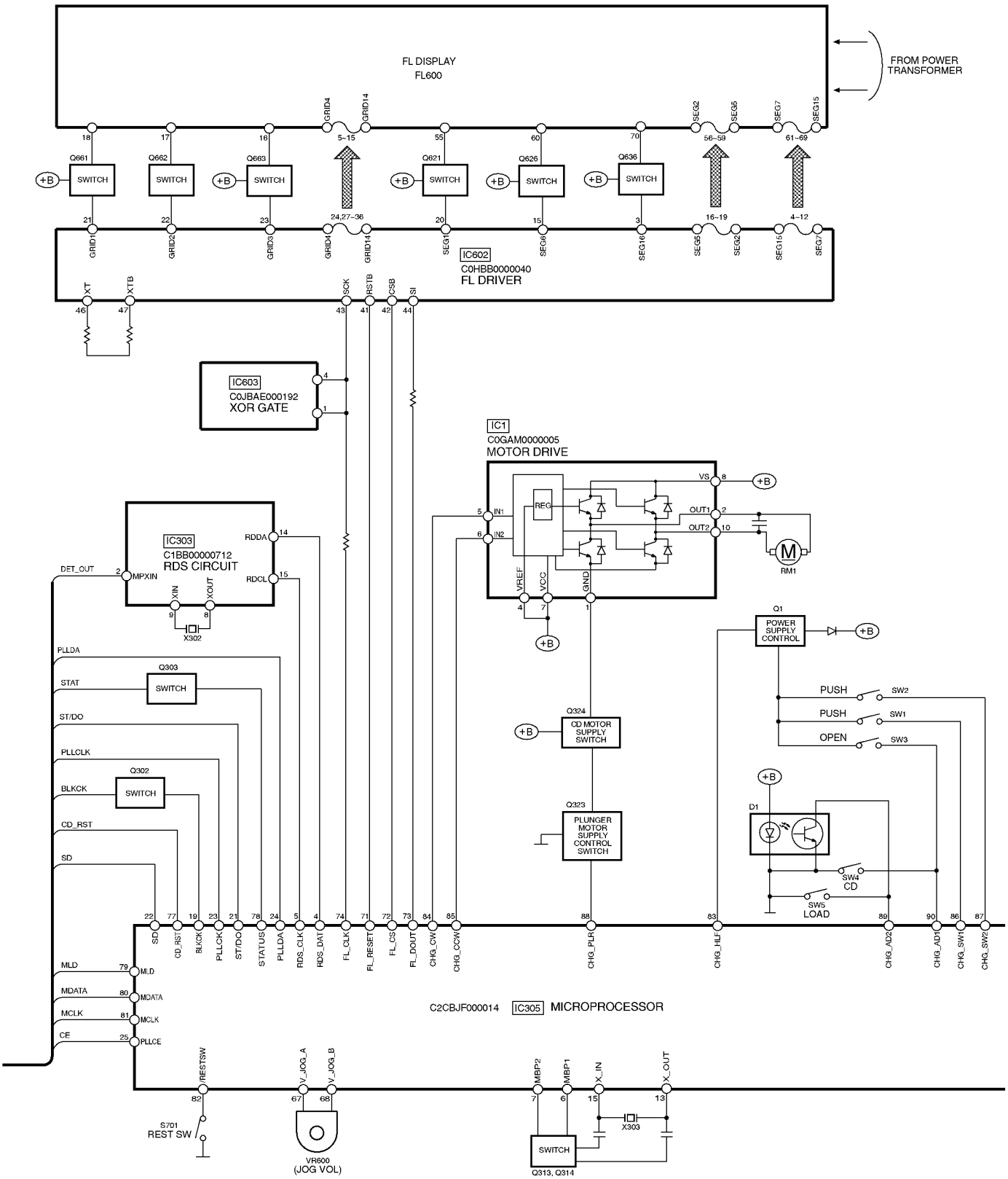
FL DISPLAY
FL600
FROM POWER TRANSFORMER
GRID4
GRID14
SEG2
SEG5
SEG7
SEG15
5~15
56~59
61~69
Q661
Q662
Q663
Q621
Q626
Q636
SWITCH
+B
24,27~36
16~19
4~12
GRID1
GRID2
GRID3
GRID4
GRID14
SEG1
SEG6
SEG16
SEG5
SEG6
SEG15
SEG7
IC602
C0HBB0000040
FL DRIVER
XT
XTB
SCK
RSTB
CSB
SI
IC603
C0JBAE000192
XOR GATE
IC1
C0GAM0000005
MOTOR DRIVE
VS
IN1
IN2
REG
OUT1
OUT2
VREF
VCC
GND
RM1
IC303
C1BB00000712
RDS CIRCUIT
RDDA
RDCL
MPXIN
XIN
XOUT
X302
DET_OUT
PLLDA
STAT
ST/DO
PLLCLK
BLKCK
CD_RST
SD
Q303
Q302
Q1
POWER SUPPLY CONTROL
PUSH
SW2
SW1
OPEN
SW3
Q324
CD MOTOR SUPPLY SWITCH
Q323
PLUNGER MOTOR SUPPLY CONTROL SWITCH
D1
SW4
CD
SW5
LOAD
MLD
MDATA
MCLK
CE
PLLCE
STATUS
RDS_CLK
RDS_DAT
FL_CLK
FL_RESET
FL_CS
FL_DOUT
CHG_CW
CHG_CCW
CHG_PLR
CHG_HLF
CHG_AD2
CHG_AD1
CHG_SW1
CHG_SW2
C2CBJF000014
IC305
MICROPROCESSOR
/RESTSW
V_JOG_A
V_JOG_B
MBP2
MBP1
X_IN
X_OUT
S701
REST SW
VR600
(JOG VOL)
X303
Q313, Q314

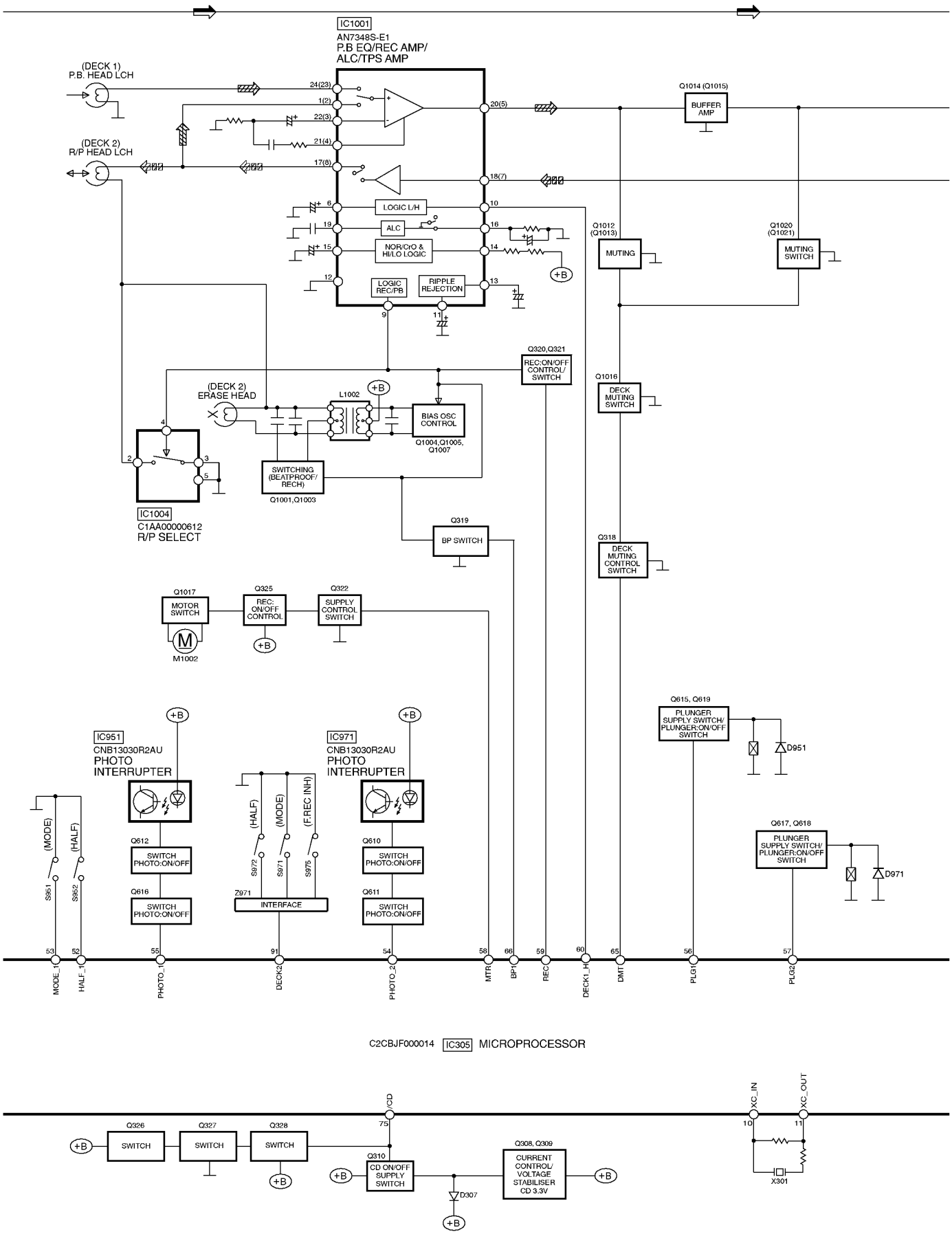
IC1001
AN7348S-E1
P.B EQ/REC AMP/
ALC/TPS AMP
(DECK 1)
P.B. HEAD LCH
(DECK 2)
R/P HEAD LCH
LOGIC L/H
ALC
NOR/CrO &
HI/LO LOGIC
LOGIC
REC/PB
RIPPLE
REJECTION
Q1014 (Q1015)
BUFFER
AMP
Q1012
(Q1013)
MUTING
Q1020
(Q1021)
MUTING
SWITCH
Q320,Q321
REC:ON/OFF
CONTROL/
SWITCH
Q1016
DECK
MUTING
SWITCH
(DECK 2)
ERASE HEAD
L1002
BIAS OSC
CONTROL
Q1004,Q1005,
Q1007
SWITCHING
(BEATPROOF/
RECH)
Q1001,Q1003
IC1004
C1AA00000612
R/P SELECT
Q319
BP SWITCH
Q318
DECK
MUTING
CONTROL
SWITCH
Q1017
MOTOR
SWITCH
M1002
Q325
REC:
ON/OFF
CONTROL
Q322
SUPPLY
CONTROL
SWITCH
IC951
CNB13030R2AU
PHOTO
INTERRUPTER
IC971
CNB13030R2AU
PHOTO
INTERRUPTER
(MODE)
(HALF)
S951
S952
Q612
SWITCH
PHOTO:ON/OFF
Q616
SWITCH
PHOTO:ON/OFF
(HALF)
(MODE)
(F.REC INH)
S972
S971
S975
Z971
INTERFACE
Q610
SWITCH
PHOTO:ON/OFF
Q611
SWITCH
PHOTO:ON/OFF
Q615, Q619
PLUNGER
SUPPLY SWITCH/
PLUNGER:ON/OFF
SWITCH
D951
Q617, Q618
PLUNGER
SUPPLY SWITCH/
PLUNGER:ON/OFF
SWITCH
D971
MODE_1
HALF_1
PHOTO_1
DECK2
PHOTO_2
MTR
BP1
REC
DECK1_H
DMT
PLG1
PLG2
C2CBJF000014 IC305 MICROPROCESSOR
/CD
XC_IN
XC_OUT
Q326
SWITCH
Q327
SWITCH
Q328
SWITCH
Q310
CD ON/OFF
SUPPLY
SWITCH
D307
Q308, Q309
CURRENT
CONTROL/
VOLTAGE
STABILISER
CD 3.3V
X301

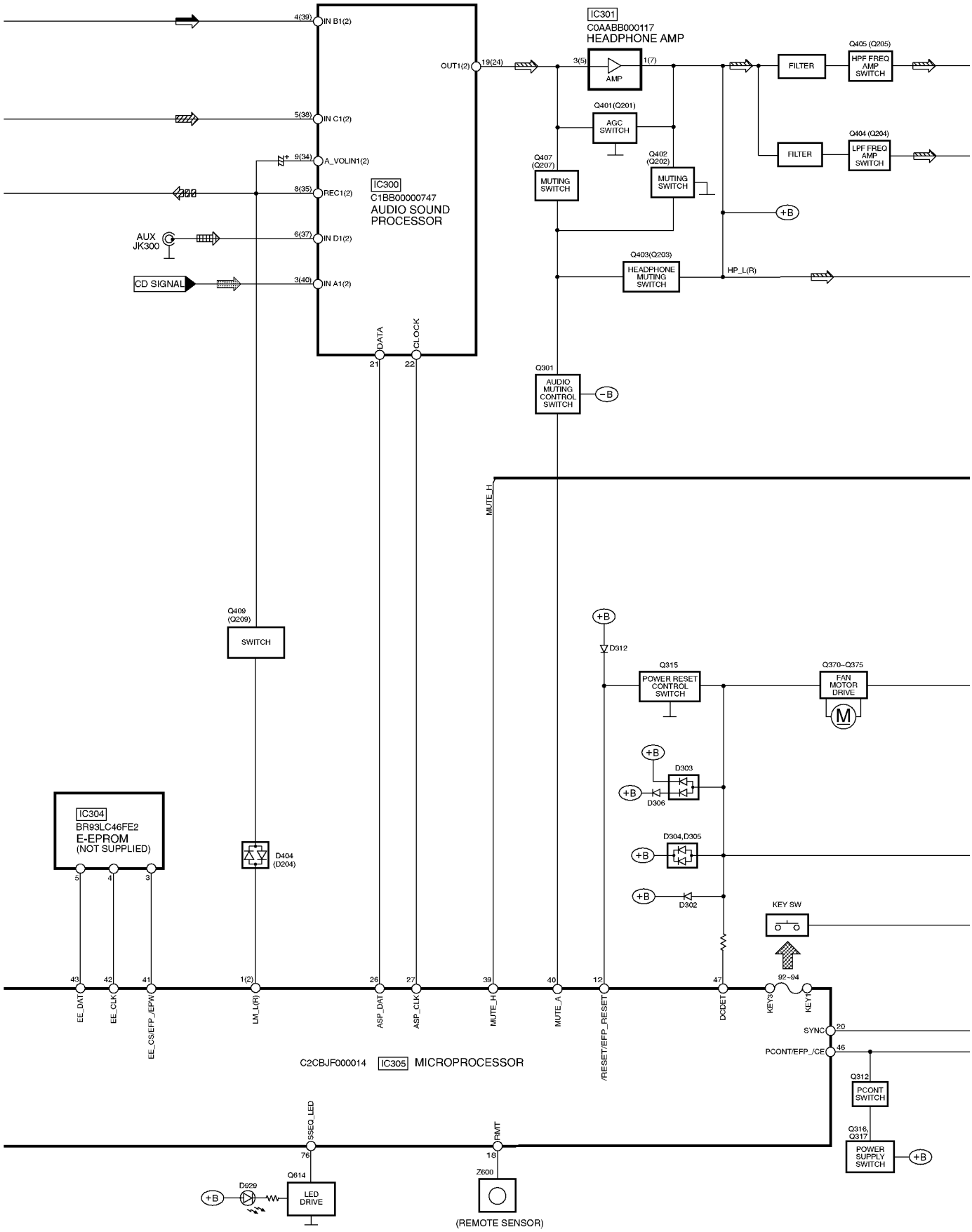
IC301
C0AABB000117
HEADPHONE AMP
AMP
IC300
C1BB00000747
AUDIO SOUND PROCESSOR
IN B1(2)
IN C1(2)
A_VOLIN1(2)
REC1(2)
IN D1(2)
IN A1(2)
OUT1(2)
AUX JK300
CD SIGNAL
DATA
CLOCK
FILTER
HPF FREQ AMP SWITCH
LPF FREQ AMP SWITCH
AGC SWITCH
MUTING SWITCH
HEADPHONE MUTING SWITCH
HP_L(R)
AUDIO MUTING CONTROL SWITCH
MUTE_H
SWITCH
POWER RESET CONTROL SWITCH
FAN MOTOR DRIVE
IC304
BR93LC46FE2
E-EPROM
(NOT SUPPLIED)
KEY SW
EE_DAT
EE_CLK
EE_CS/EFP_/EPW
LM_L(R)
ASP_DAT
ASP_CLK
MUTE_A
/RESET/EFP_RESET
DCDET
KEY3
KEY1
SYNC
PCONT/EFP_/CE
C2CBJF000014
IC305
MICROPROCESSOR
PCONT SWITCH
POWER SUPPLY SWITCH
SSEQ_LED
RMT
LED DRIVE
(REMOTE SENSOR)

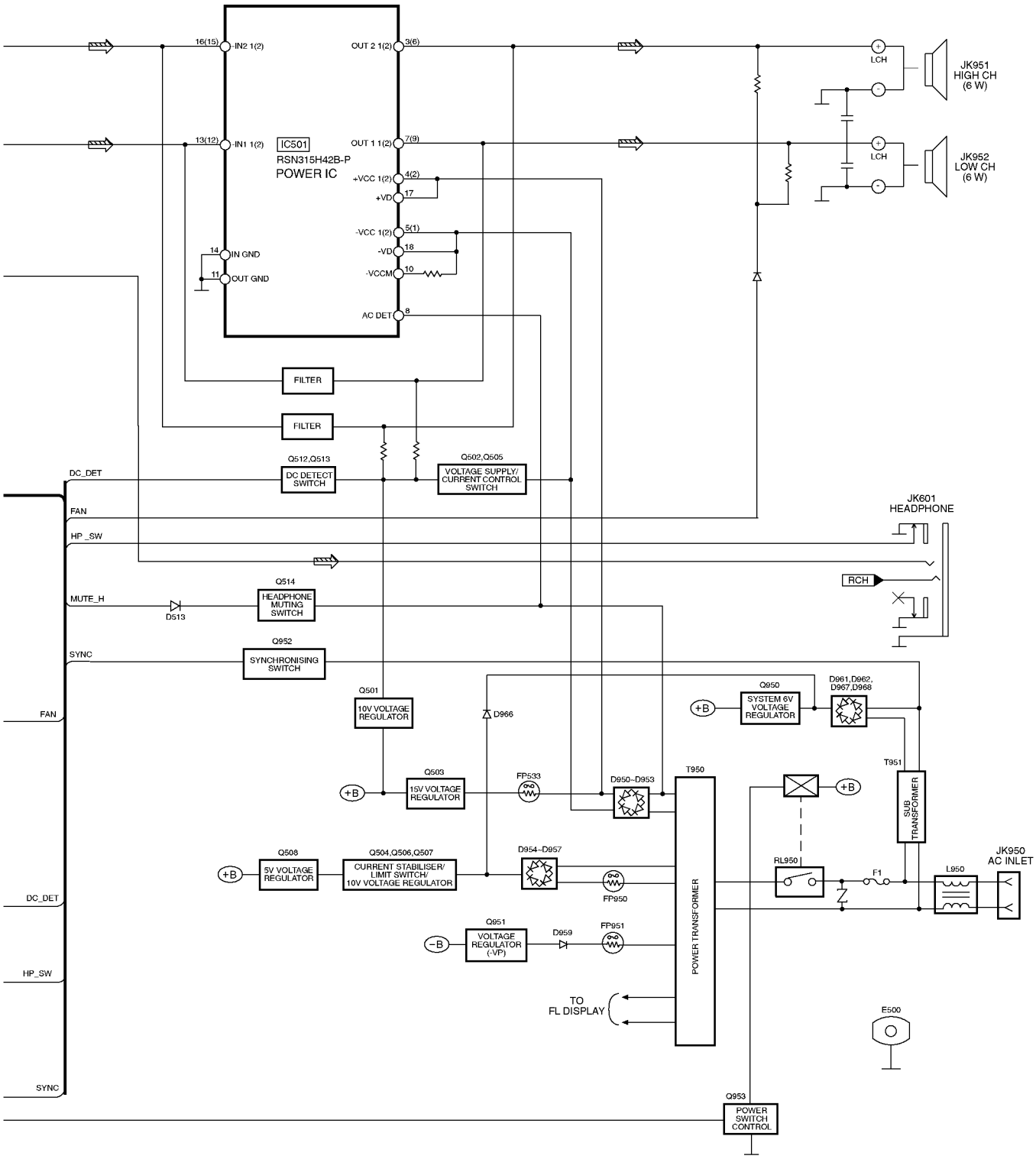

SIGNAL LINES

MAIN SIGNAL LINE	CD SIGNAL LINE	AM SIGNAL LINE	PLAYBACK SIGNAL LINE
FM OSC SIGNAL LINE	AM OSC SIGNAL LINE	FM & AM SIGNALS LINE	RECORDING SIGNAL LINE
FM SIGNAL LINE	AUX SIGNAL LINE	CD-DA SIGNAL LINE	
( ) Indicates the Pin No. of Right Channel		NOTE : Signal Lines are applicable to the Left Channel only	

17 Schematic Diagram

(All schematic diagrams may be modified at any time with the development of the new technology)

Note:

SW1	: Push switch
SW2	: Push switch
SW3	: Open switch
SW4	: CD switch
SW5	: Load switch
S601	: Open/ Close switch
S602	: CD 1 switch
S603	: CD 2 switch
S604	: CD 3 switch
S605	: CD 4 switch
S606	: CD 5 switch
S612	: Power switch
S613	: SSEQ switch
S614	: Preset switch
S615	: Rec switch
S616	: Deck 1/2 switch
S701	: Rest switch
S901	: Rew switch
S902	: Tuner switch
S903	: CD switch
S904	: FF switch
S905	: Stop switch
S906	: Deck 2 switch
S907	: Tape switch
S908	: AUX switch
S909	: Deck 1 switch
S910	: Display switch
S951	: Mode switch
S952	: Half switch
S971	: Mode switch
S972	: Half switch
S975	: Recinh_F switch
VR600	: VR Volume Jog

- The voltage value and waveforms are the reference voltage of this unit measured by DC electronic voltmeter (high impedance) and oscilloscope on the basis of chassis. Accordingly, there may arise some error in voltage values and waveformsdepending upon the internal impedance of the tester or the measuring unit.

No mark : Playback << >> : Rec < > : FM
(( )) : CD

- **Importance safety notice :**

  Components identified by ⚠ mark have special characteristics important for safety. Furthermore, special parts which have purposes of fire-retardant (resistors), high-quality sound (capacitors), low-noise (resistors), etc. are used. Whenreplacing any of components, be sure to use only manufacturer´s specified parts shown in the parts list.

Caution !

IC, LSI and VLSI are sensitive to static electricity.

Secondary trouble can be prevented by taking care during repair.

- Cover the parts boxes made of plastics with aluminium foil.
- Put a conductive mat on the work table.
- Ground the soldering iron.
- Do not touch the pins of IC, LSI or VLSI with fingers directly.

17.1. (A) CD Servo Circuit

SCHEMATIC DIAGRAM - 1

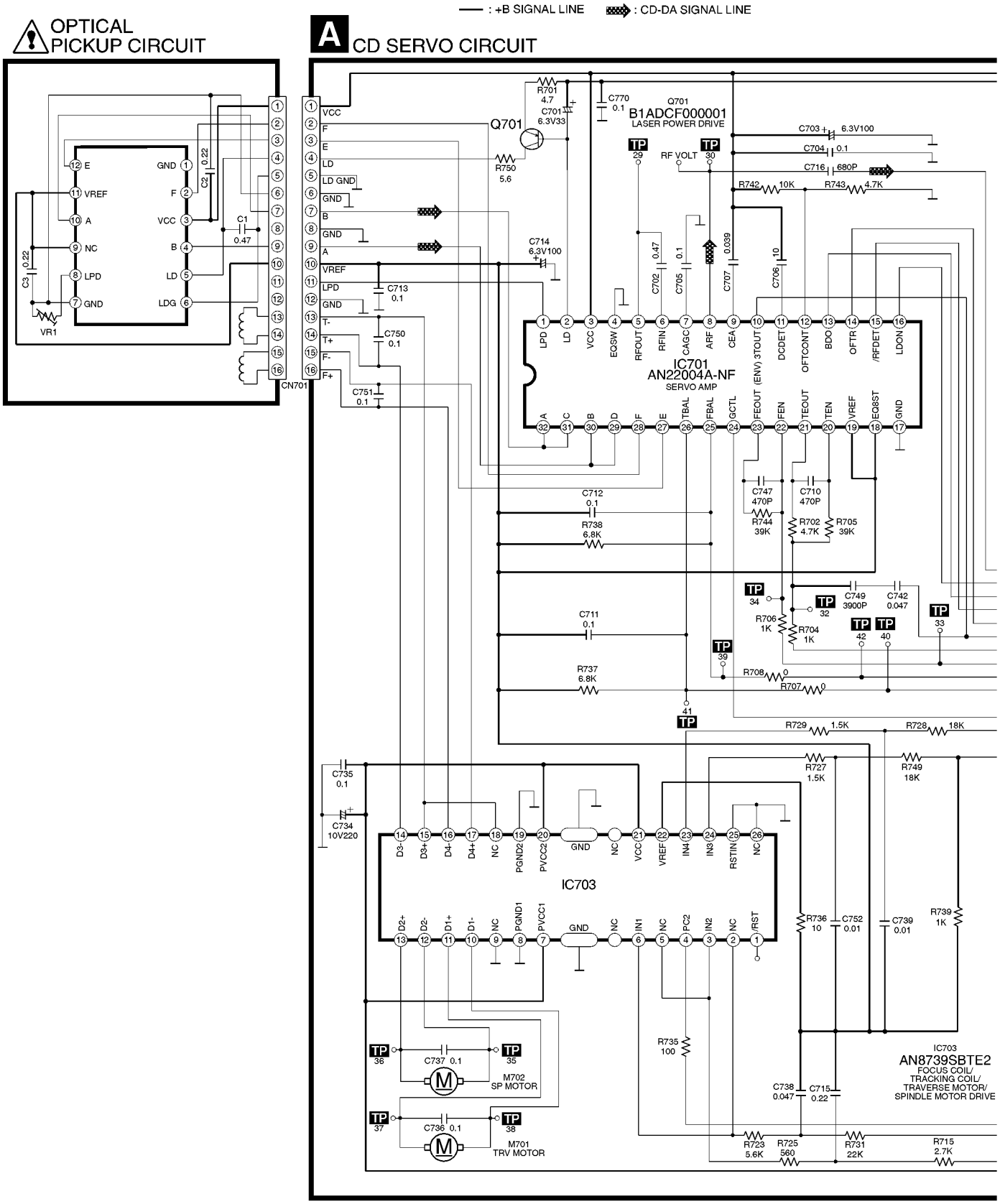

SCHEMATIC DIAGRAM - 2

—— : +B SIGNAL LINE : CD-DA SIGNAL LINE : CD SIGNAL LINE

A CD SERVO CIRCUIT

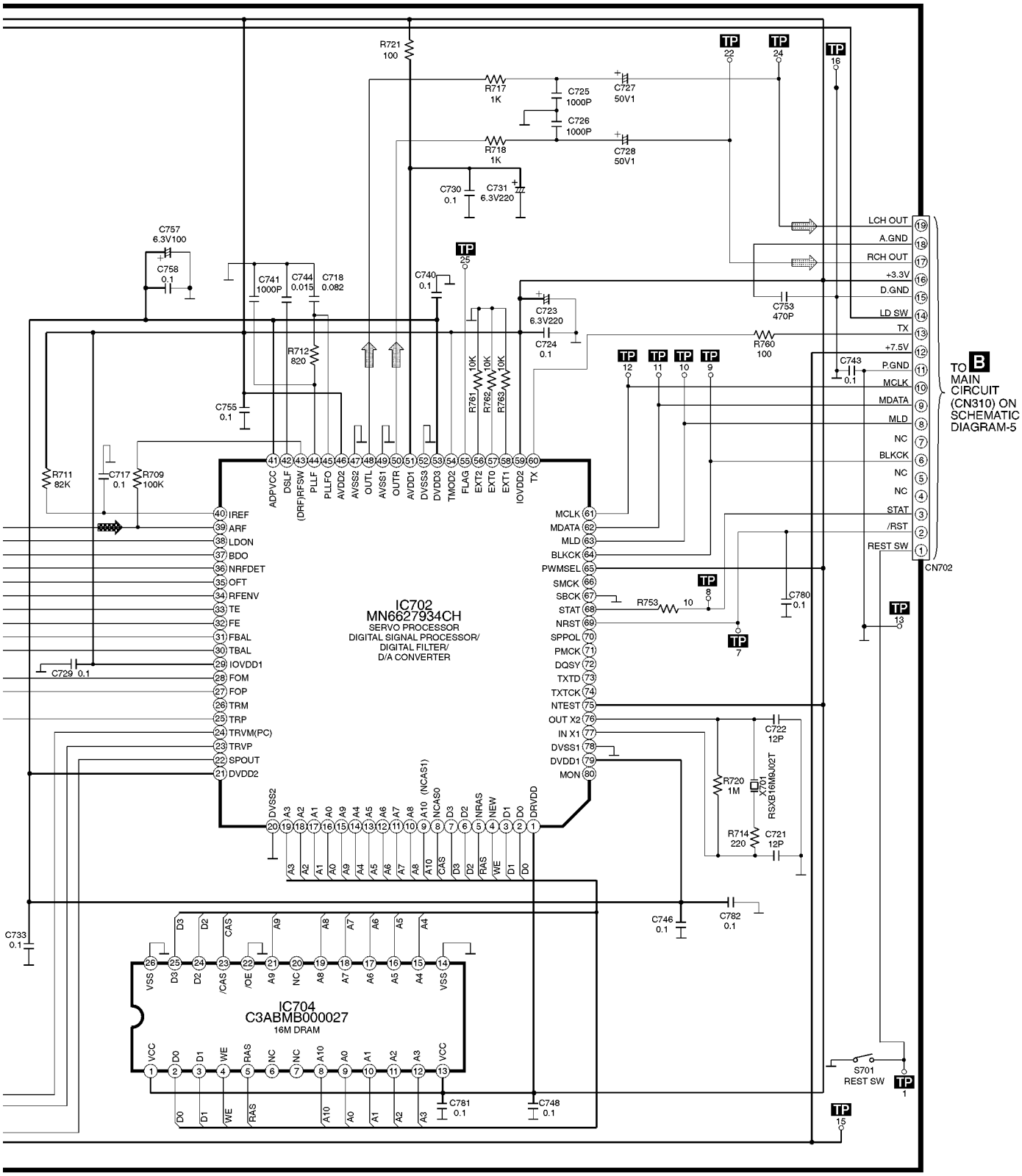

17.2. (B) Tuner/Main Circuit

SCHEMATIC DIAGRAM - 3

: +B SIGNAL LINE
: FM/AM SIGNAL LINE
: FM SIGNAL LINE
: FM OSC SIGNAL LINE
: AM SIGNAL LINE
: AM OSC SIGNAL LINE

B TUNER/MAIN CIRCUIT

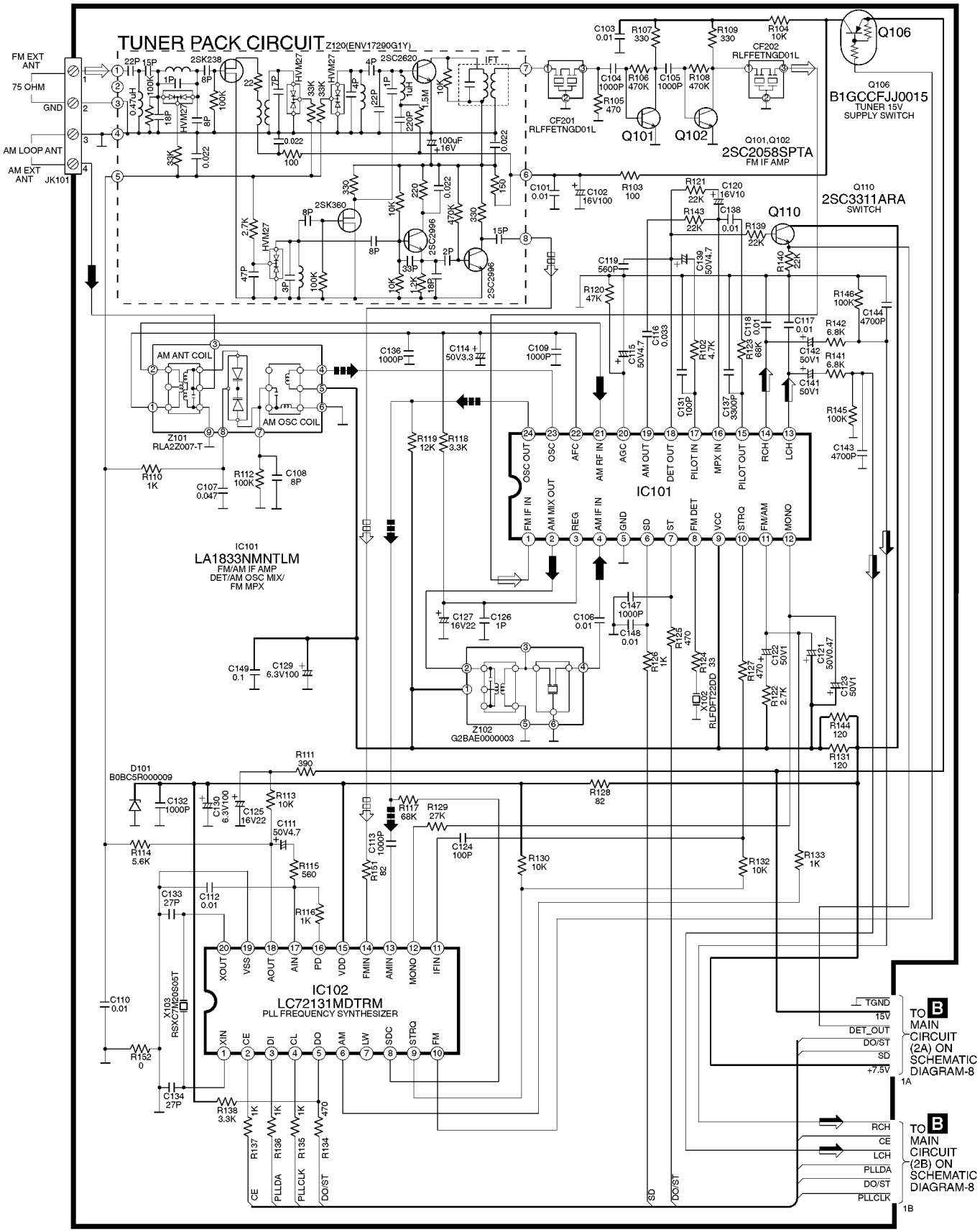

17.3. (B) Main Circuit

SCHEMATIC DIAGRAM - 4

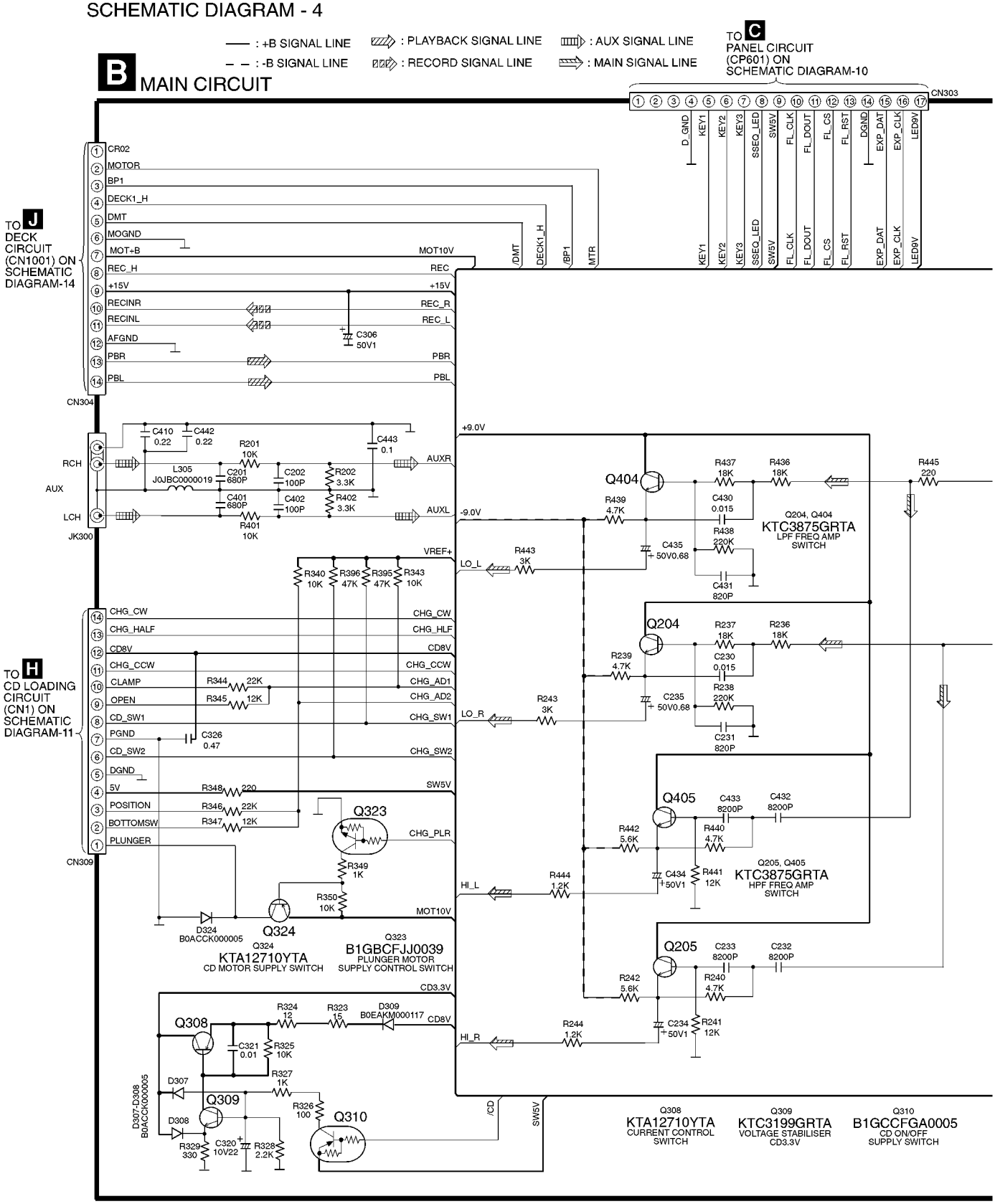

SCHEMATIC DIAGRAM - 5

—— : +B SIGNAL LINE
– – : -B SIGNAL LINE
: CD SIGNAL LINE
: MAIN SIGNAL LINE

B MAIN CIRCUIT

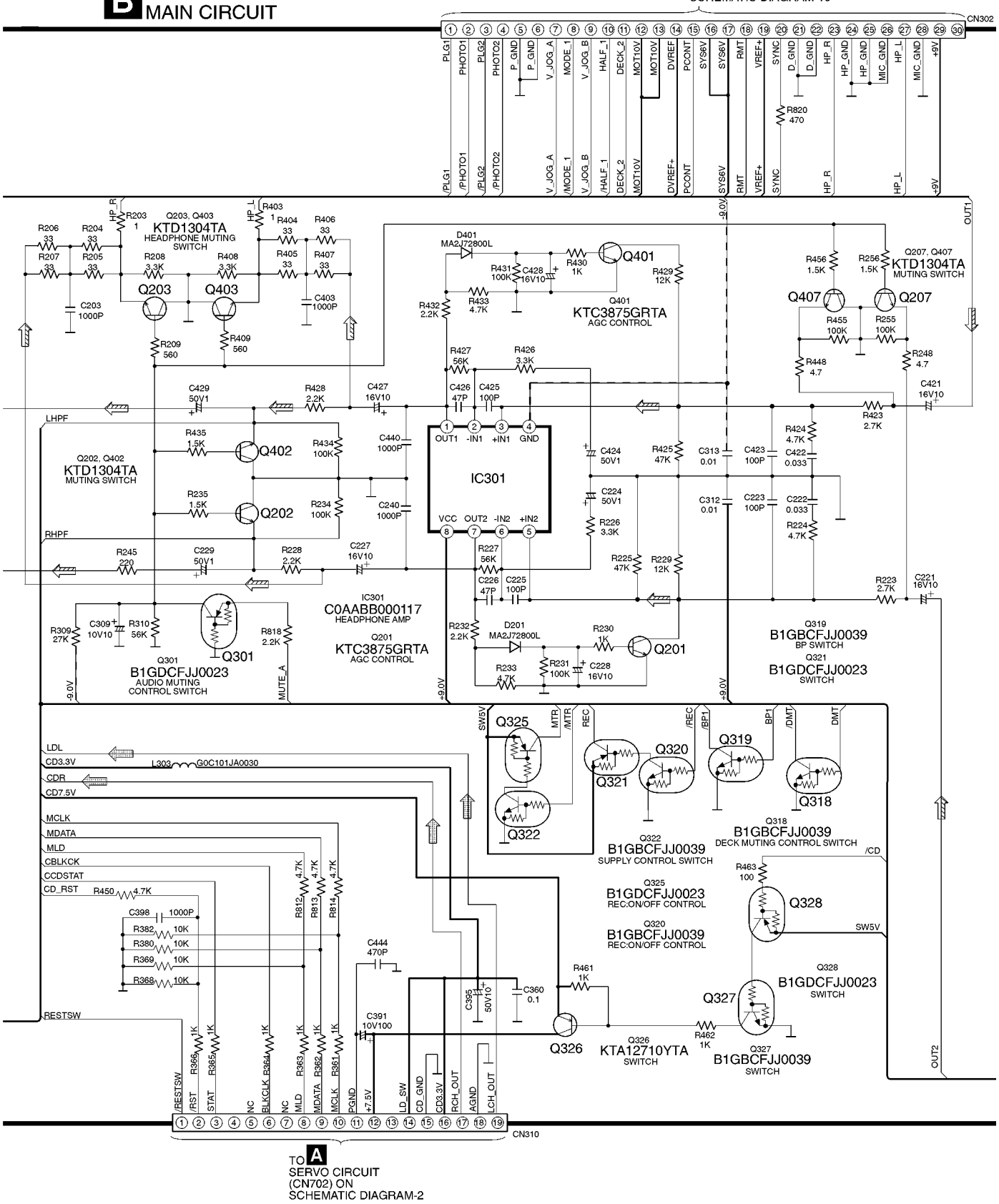

SCHEMATIC DIAGRAM - 6

—— : +B SIGNAL LINE

B MAIN CIRCUIT

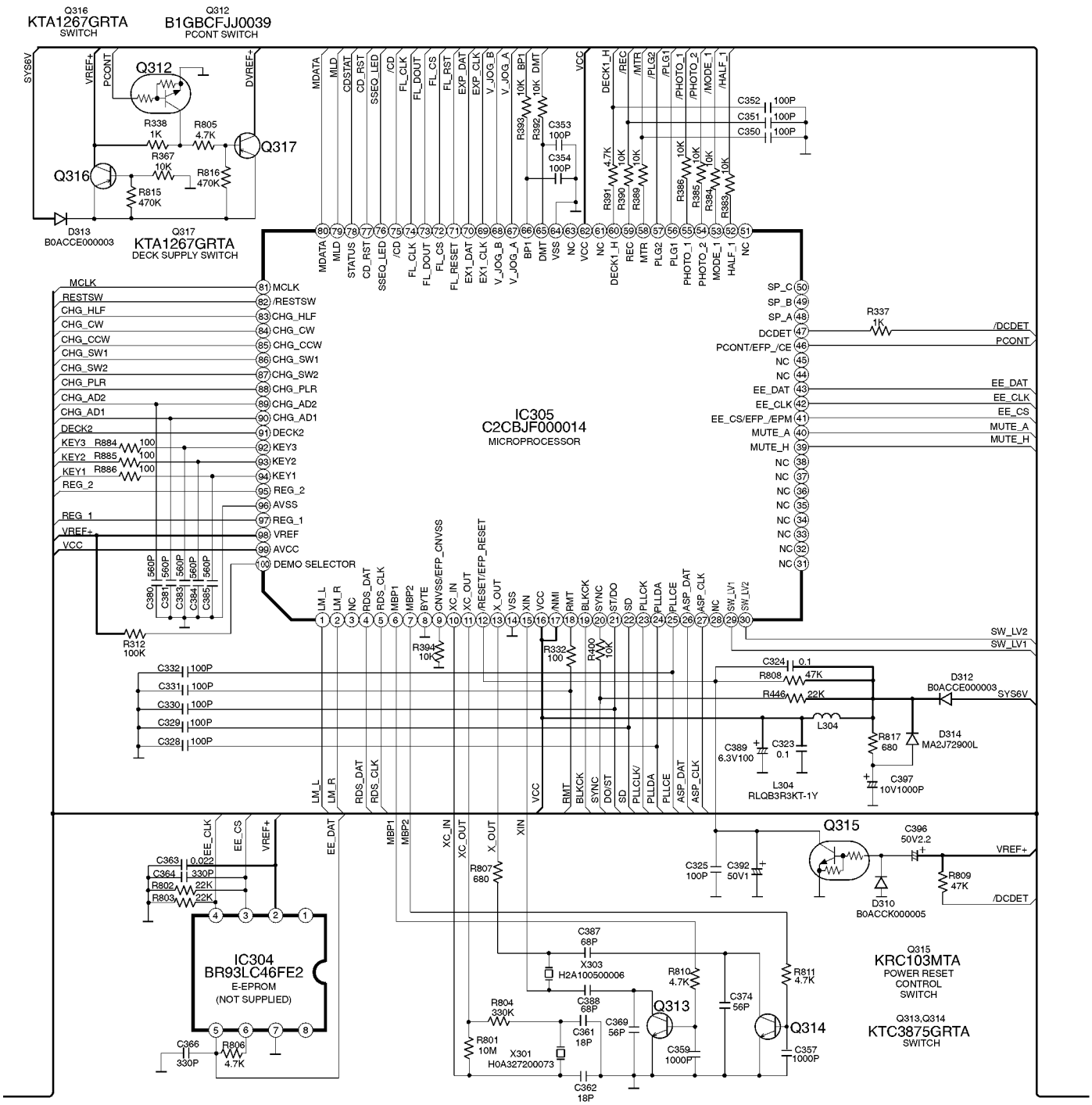

SCHEMATIC DIAGRAM - 7

—— : +B SIGNAL LINE

– – : -B SIGNAL LINE

B MAIN CIRCUIT

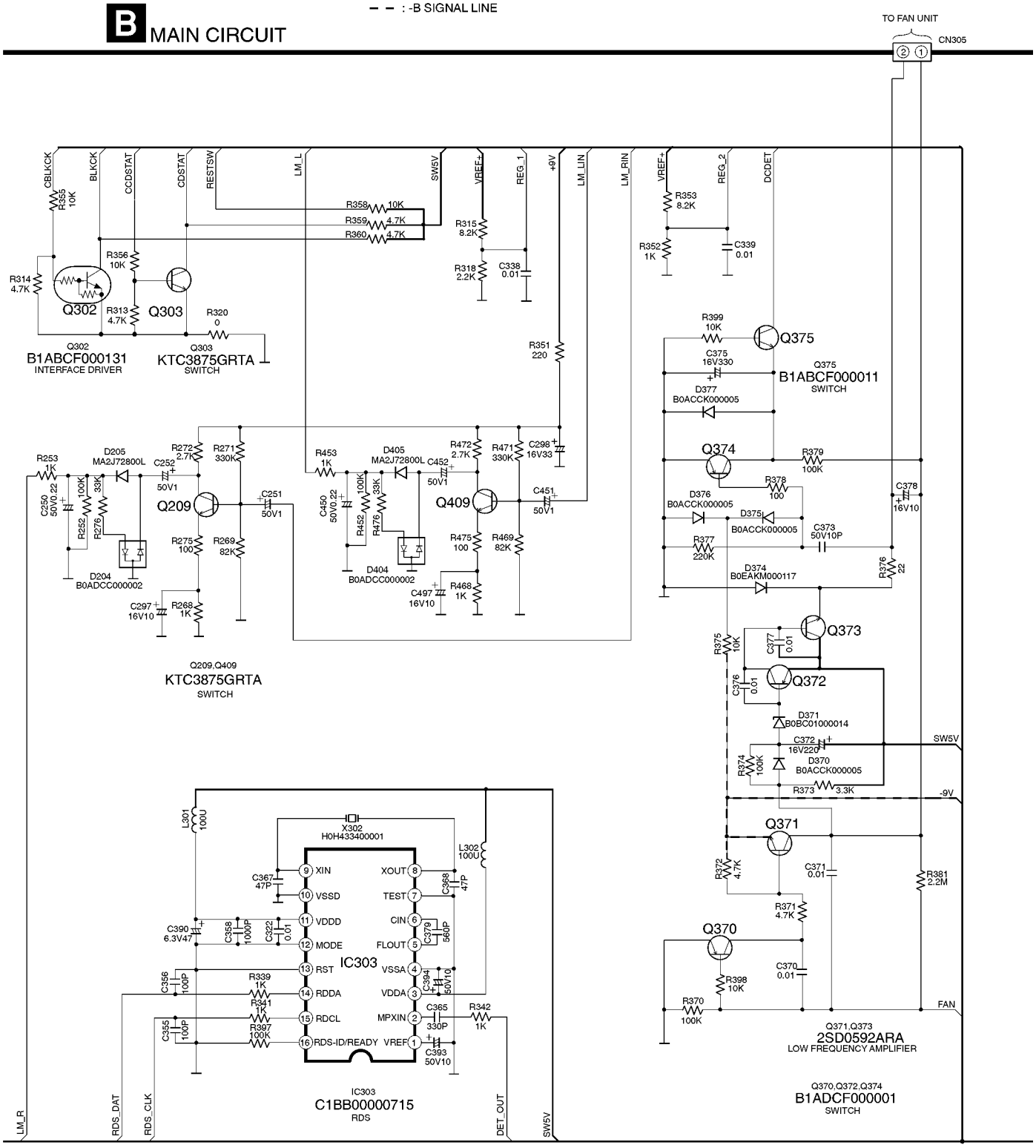

SCHEMATIC DIAGRAM - 8

: +B SIGNAL LINE
: -B SIGNAL LINE
: AUX SIGNAL LINE
: CD SIGNAL LINE
: FM/AM SIGNAL LINE
: MAIN SIGNAL LINE
: PLAYBACK SIGNAL LINE
: RECORD SIGNAL LINE

B MAIN CIRCUIT

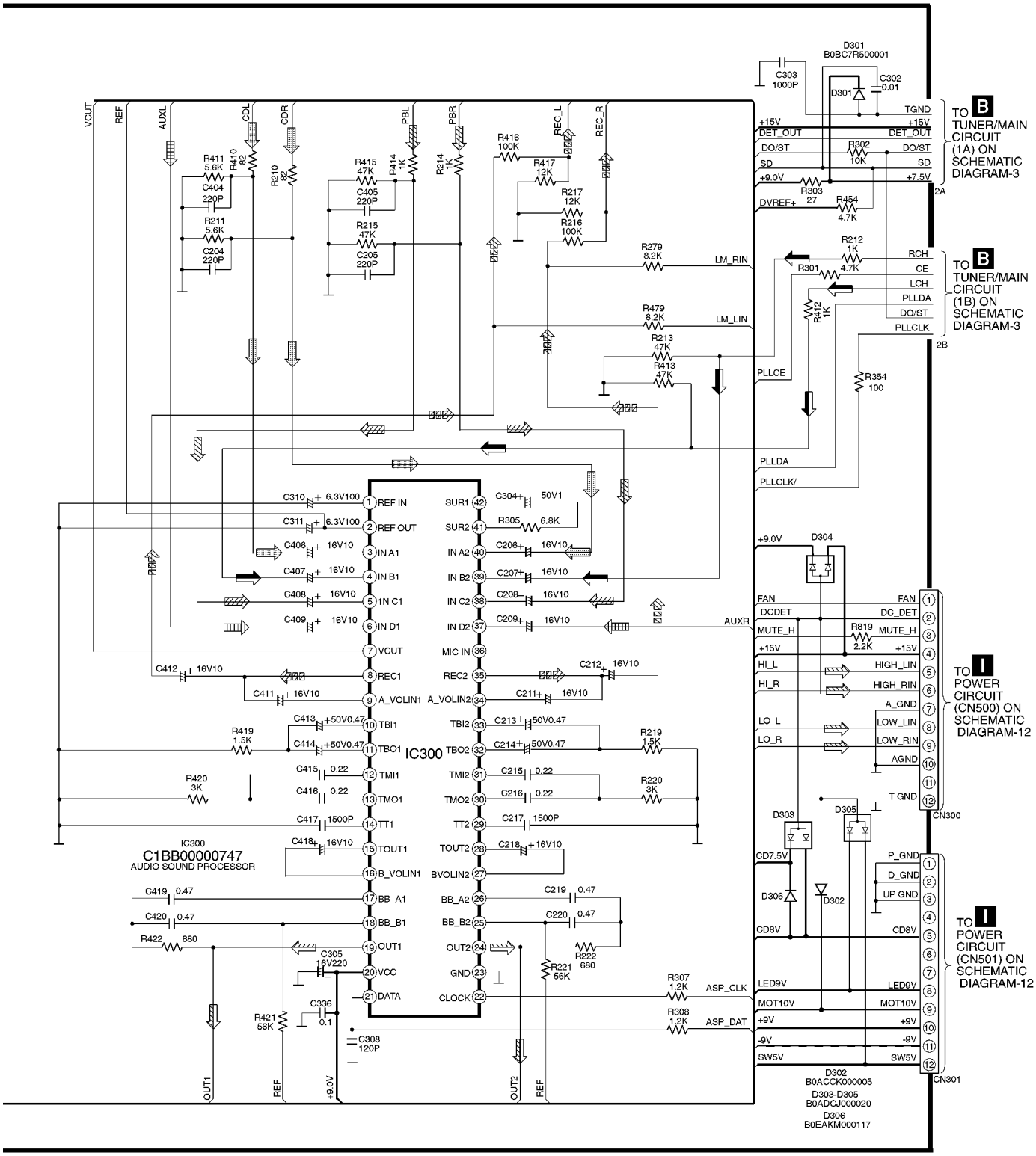

17.4. (C) Panel Circuit & (D) Tact Switch Circuit

SCHEMATIC DIAGRAM - 9

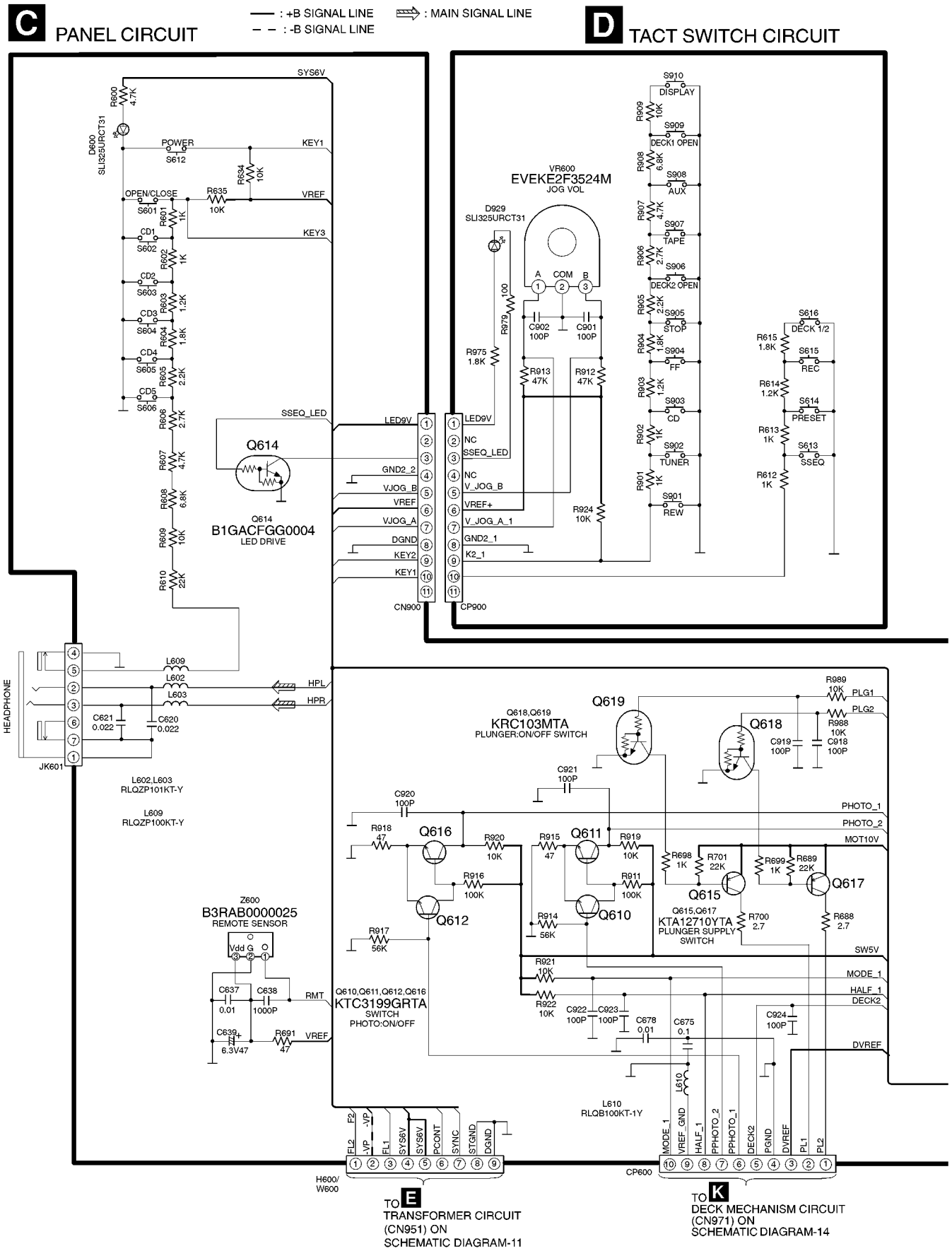

SCHEMATIC DIAGRAM - 10

C PANEL CIRCUIT

—— : +B SIGNAL LINE – – : -B SIGNAL LINE ⇨ : MAIN SIGNAL LINE

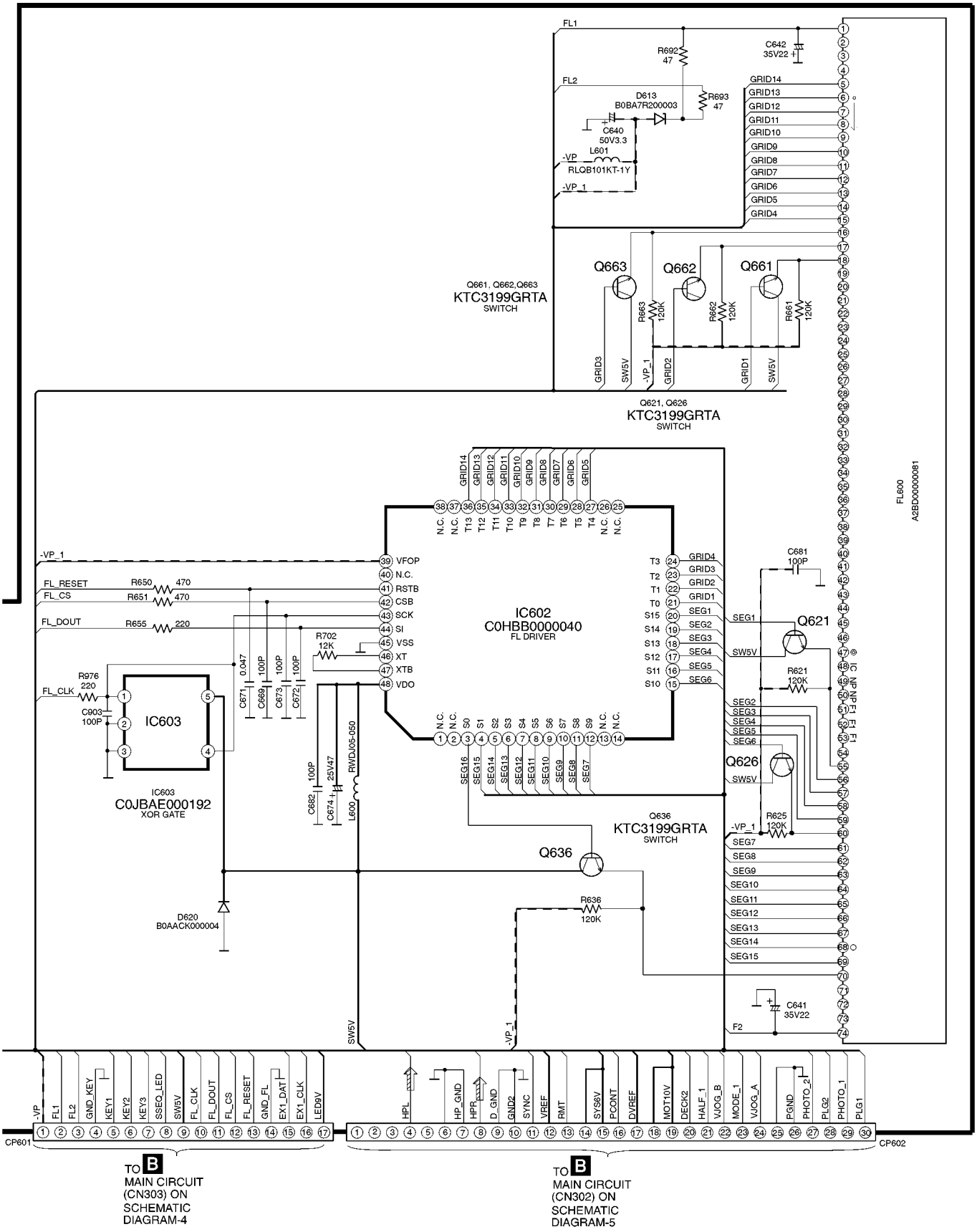

TO B MAIN CIRCUIT (CN303) ON SCHEMATIC DIAGRAM-4

TO B MAIN CIRCUIT (CN302) ON SCHEMATIC DIAGRAM-5

17.5. (E) Transformer Circuit, (F) CD Detect Circuit, (G) Spindle Position Circuit & (H) CD Loading Circuit

SCHEMATIC DIAGRAM - 11

—— : +B SIGNAL LINE – – : -B SIGNAL LINE

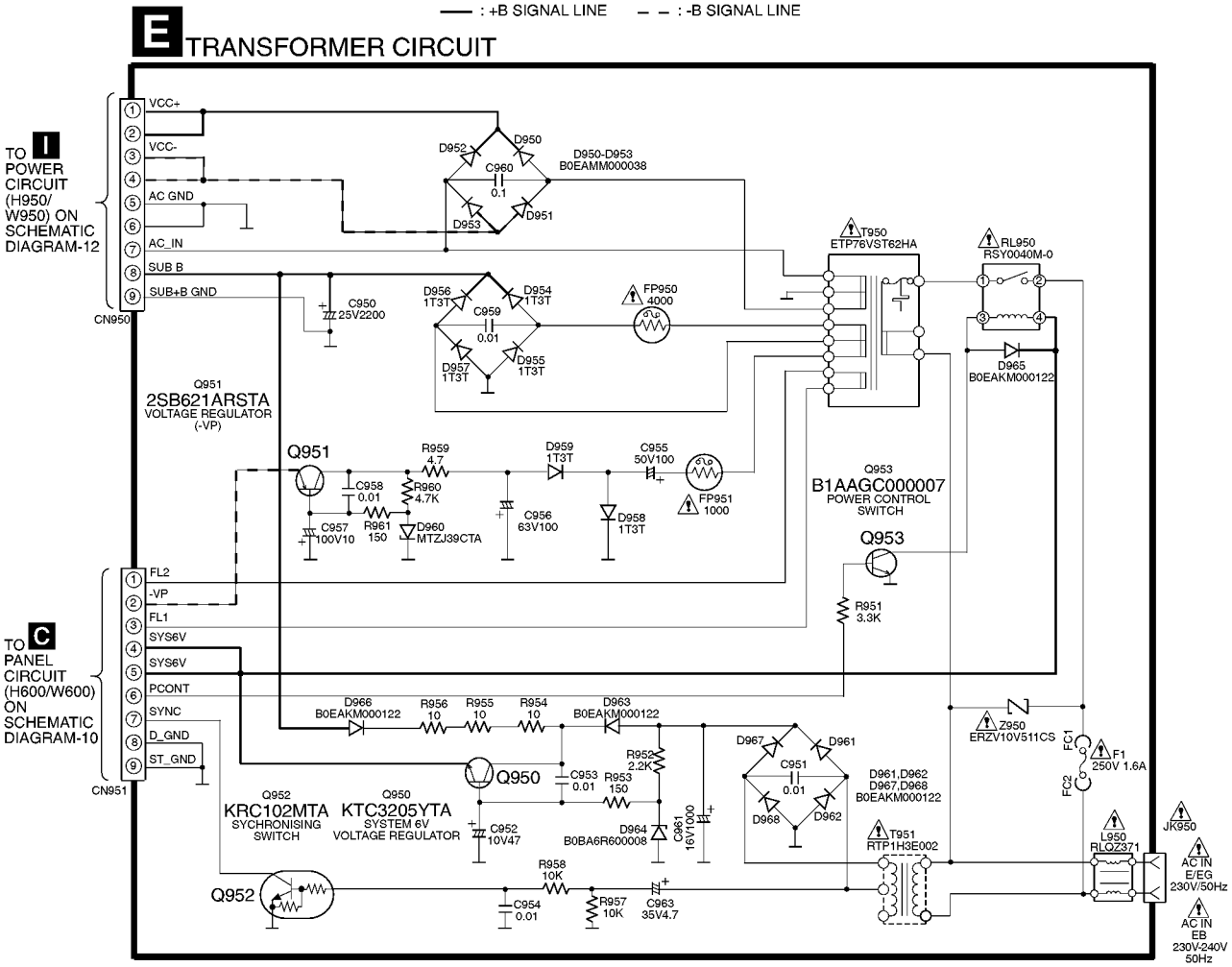

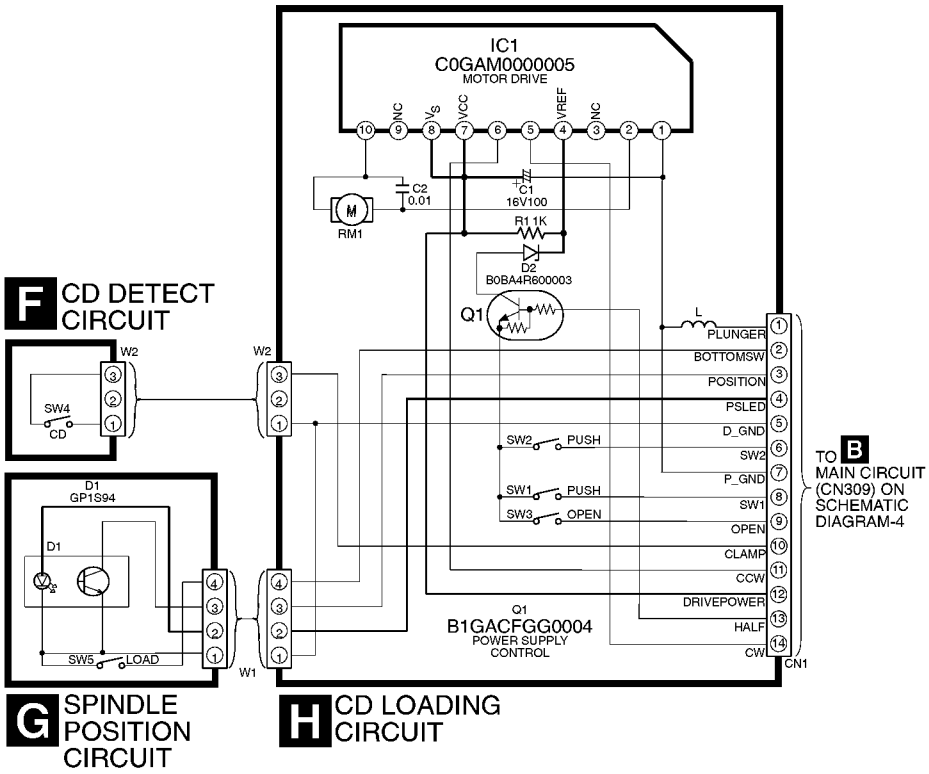

17.6. (I) Power Circuit

SCHEMATIC DIAGRAM - 12

—— : +B SIGNAL LINE – – : -B SIGNAL LINE ⇨ : MAIN SIGNAL LINE

I POWER CIRCUIT

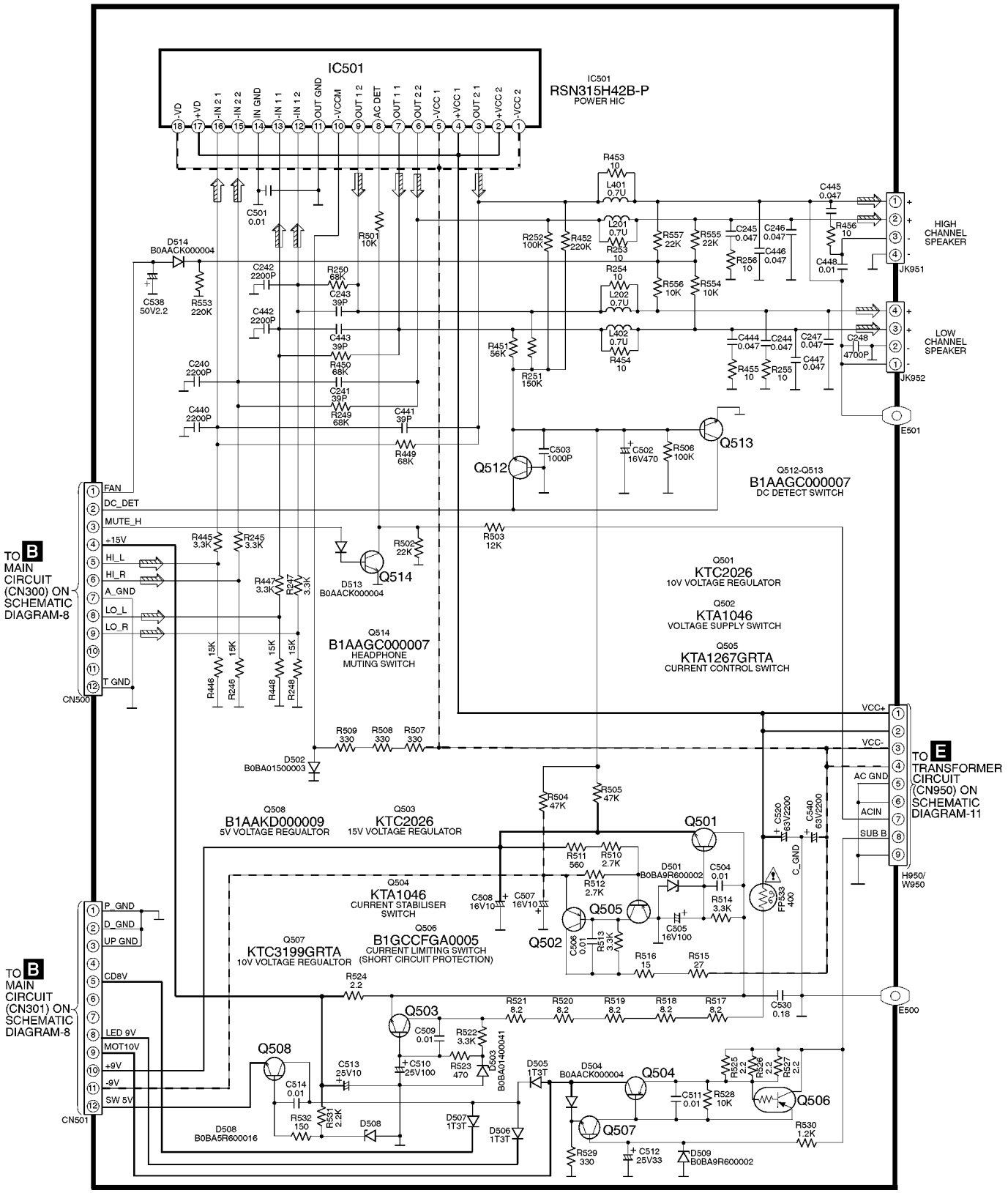

17.7. (J) Deck Circuit & (K) Mechanism Circuit

SCHEMATIC DIAGRAM -13

—— : +B SIGNAL LINE

: PLAYBACK SIGNAL LINE

: RECORD SIGNAL LINE

J DECK CIRCUIT

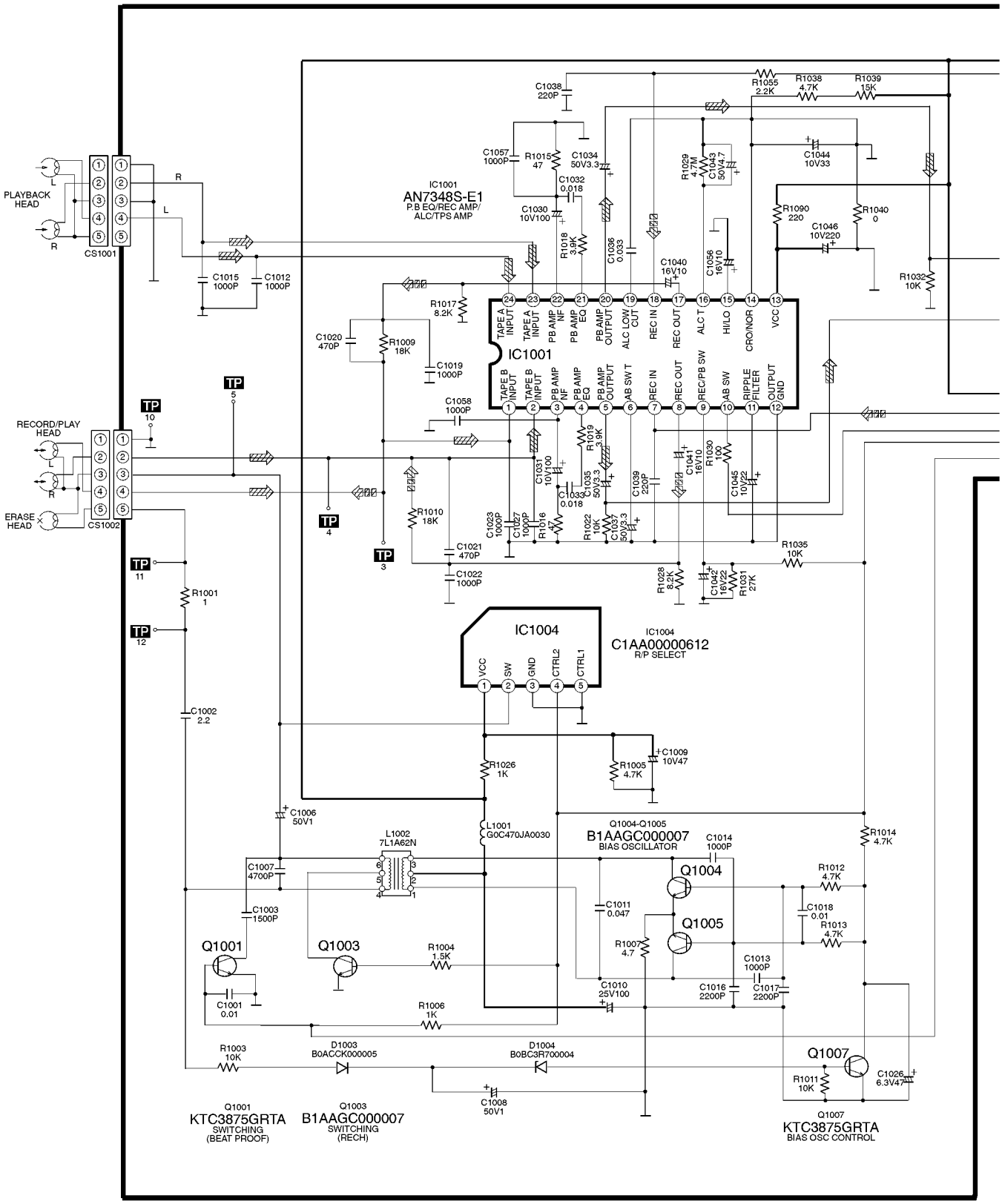

SCHEMATIC DIAGRAM - 14

—— : +B SIGNAL LINE

▨ : PLAYBACK SIGNAL LINE

▨ : RECORD SIGNAL LINE

J DECK CIRCUIT

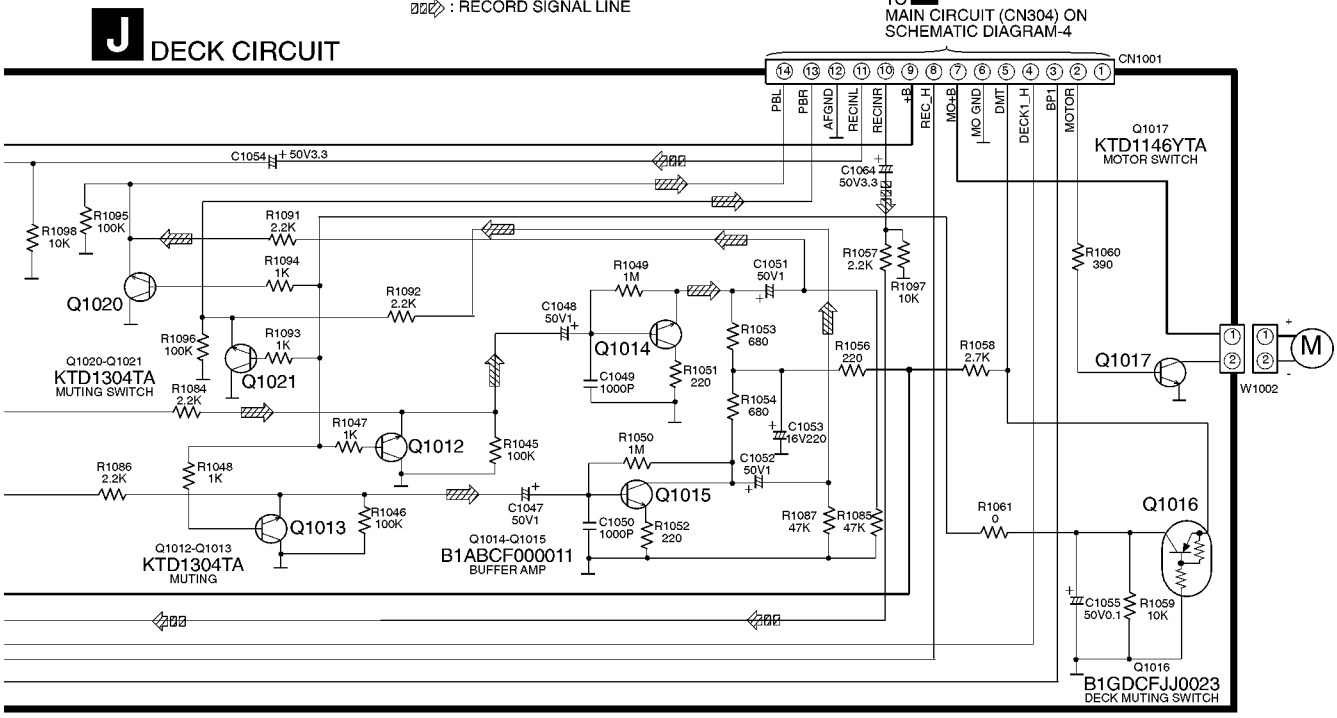

K DECK MECHANISM CIRCUIT

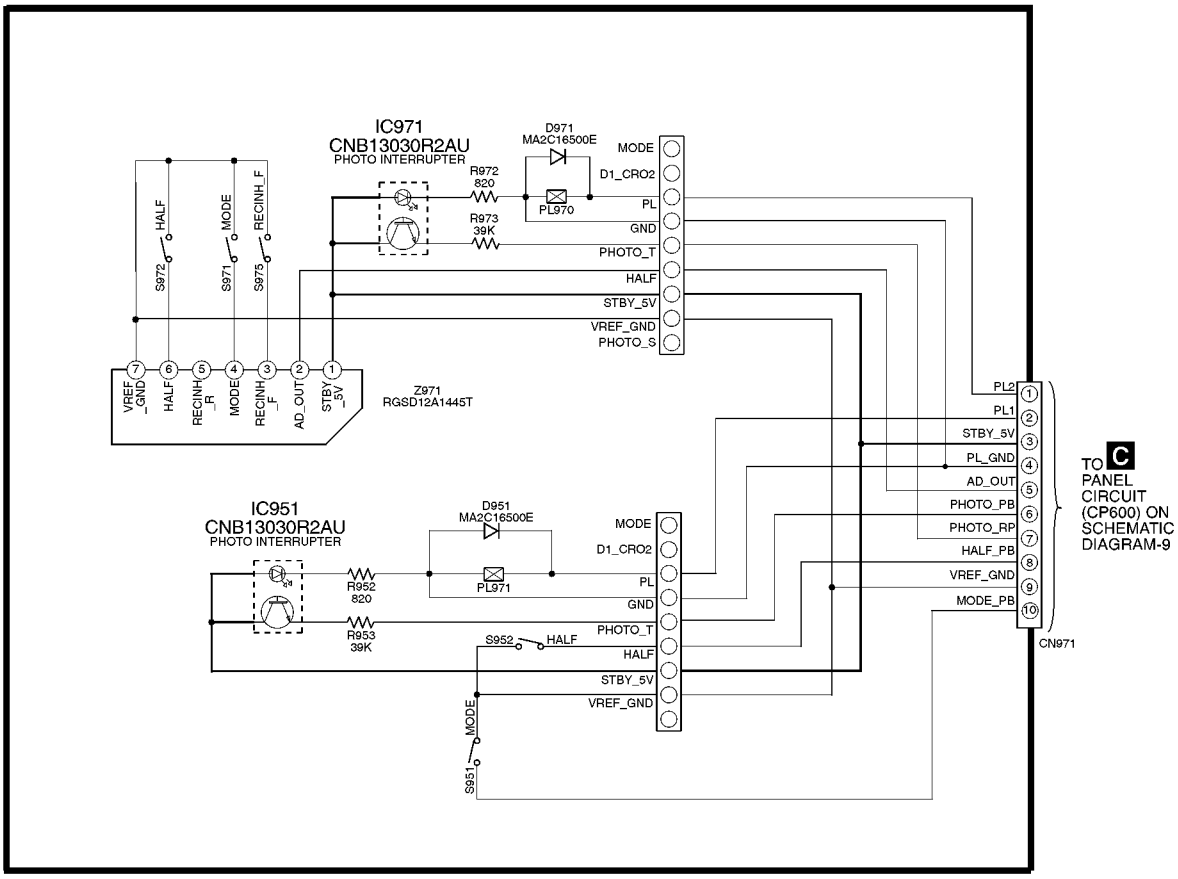

18 Printed Circuit Board

Note: Circuit board diagrams may be modified at any time with the development of new technology.

18.1. (A) CD Servo P.C.B.

A CD SERVO P.C.B (REPX0405A)

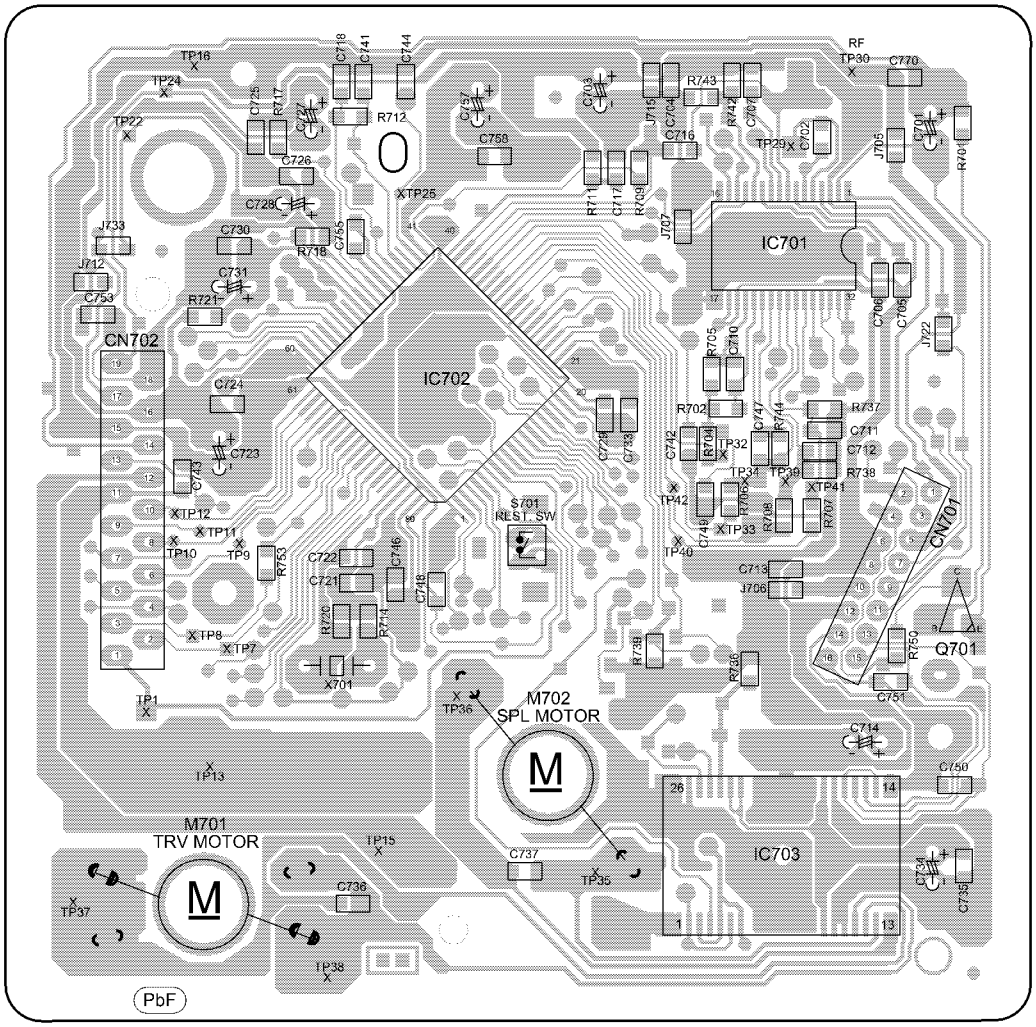

(SIDE A)

A B C D E F G

1 2 3 4 5 6 7 8 9

A CD SERVO P.C.B (REPX0405A)

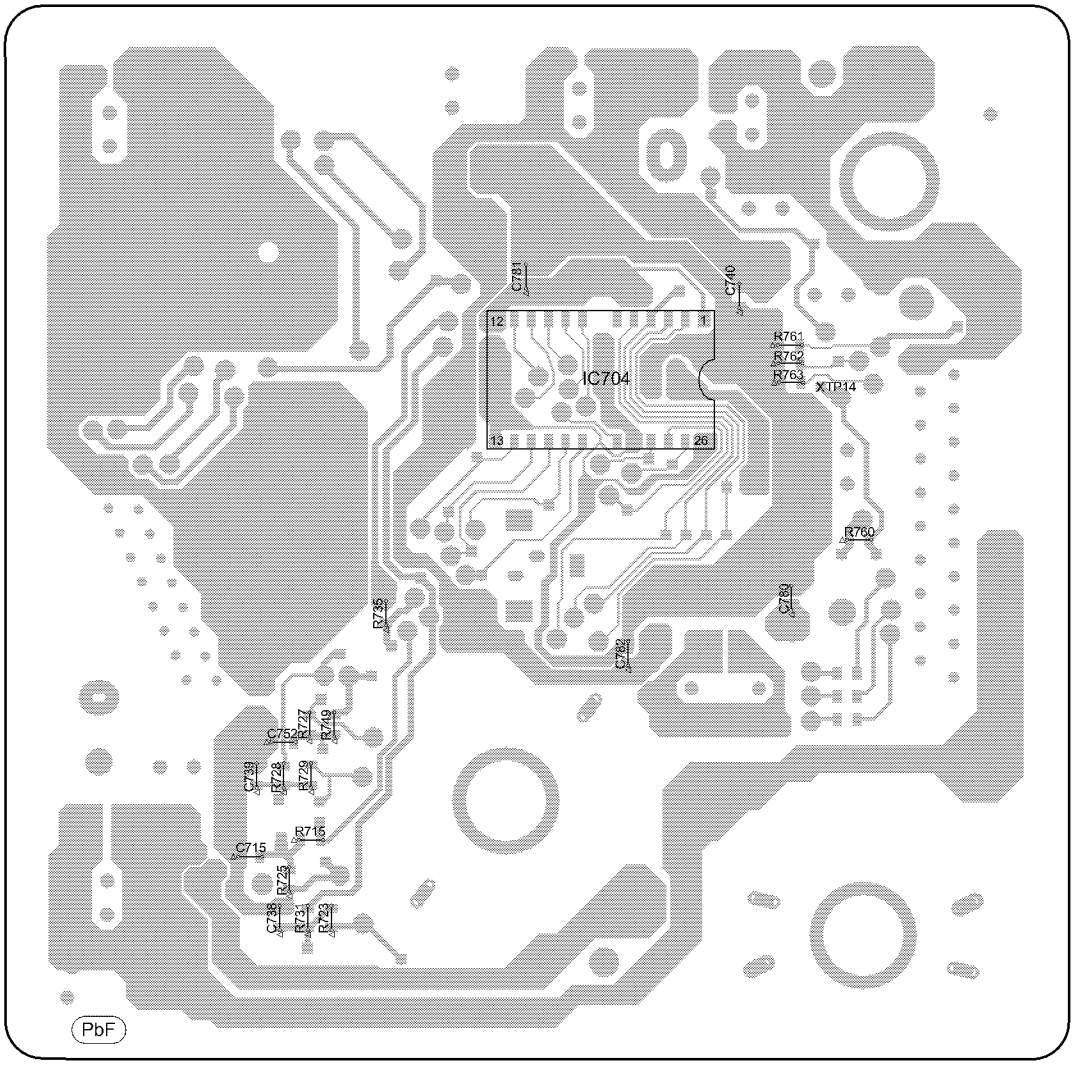

(SIDE B)

18.2. (B) Main/ Tuner P.C.B.

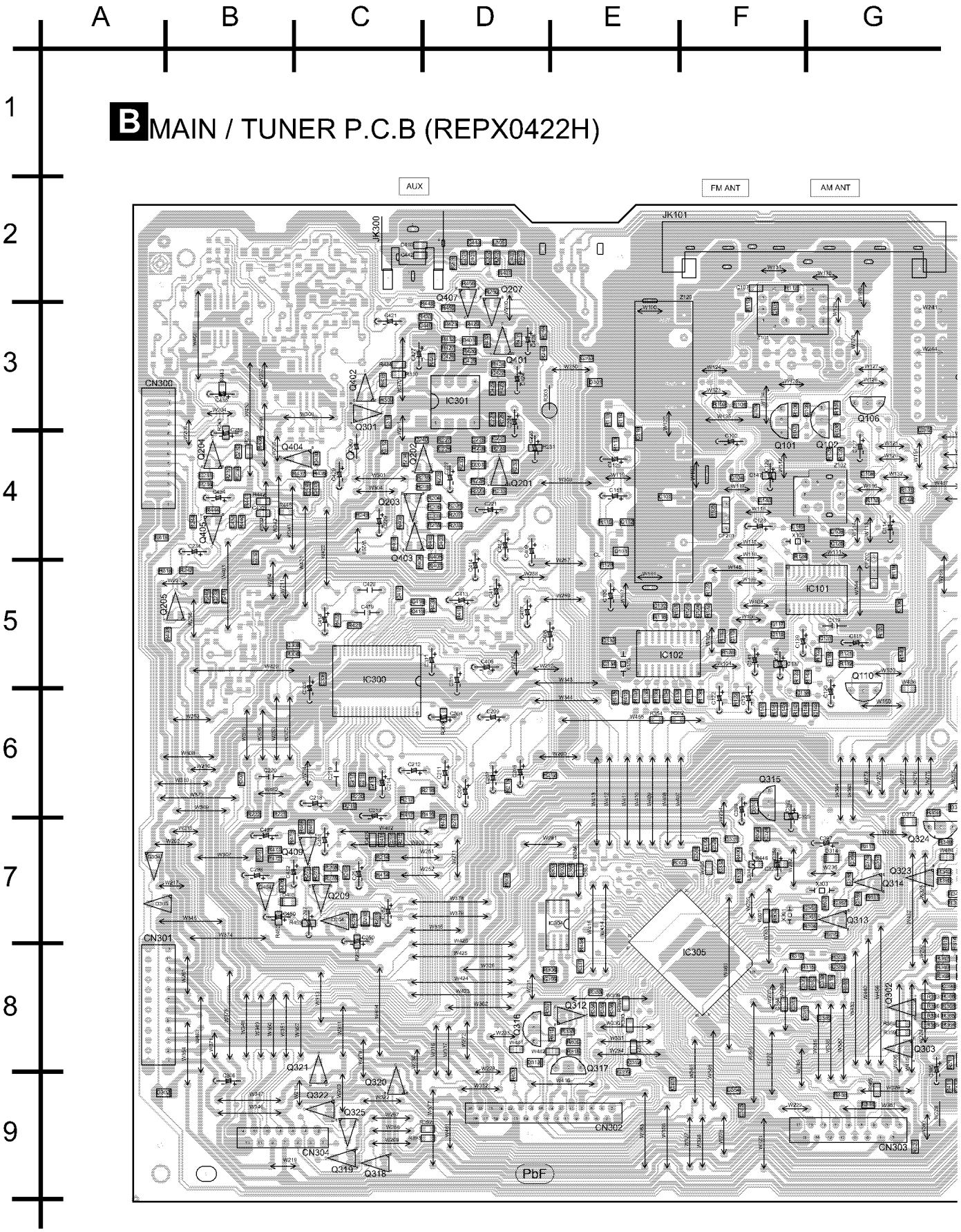

G H I J K L M

AM ANT

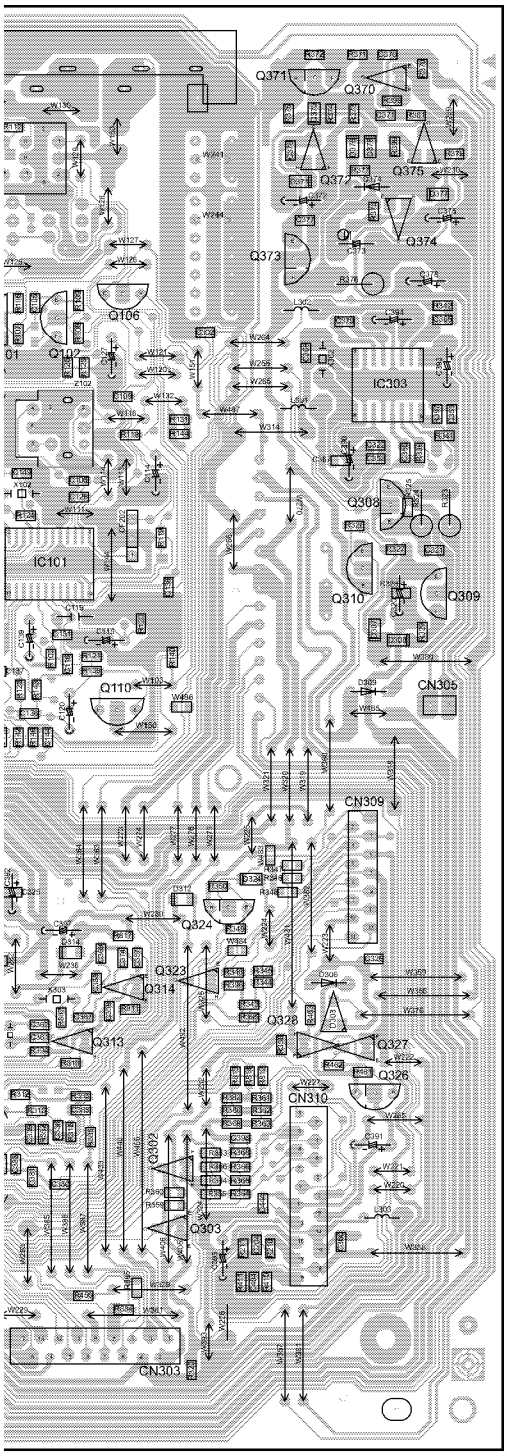

18.3. (C) Panel P.C.B.

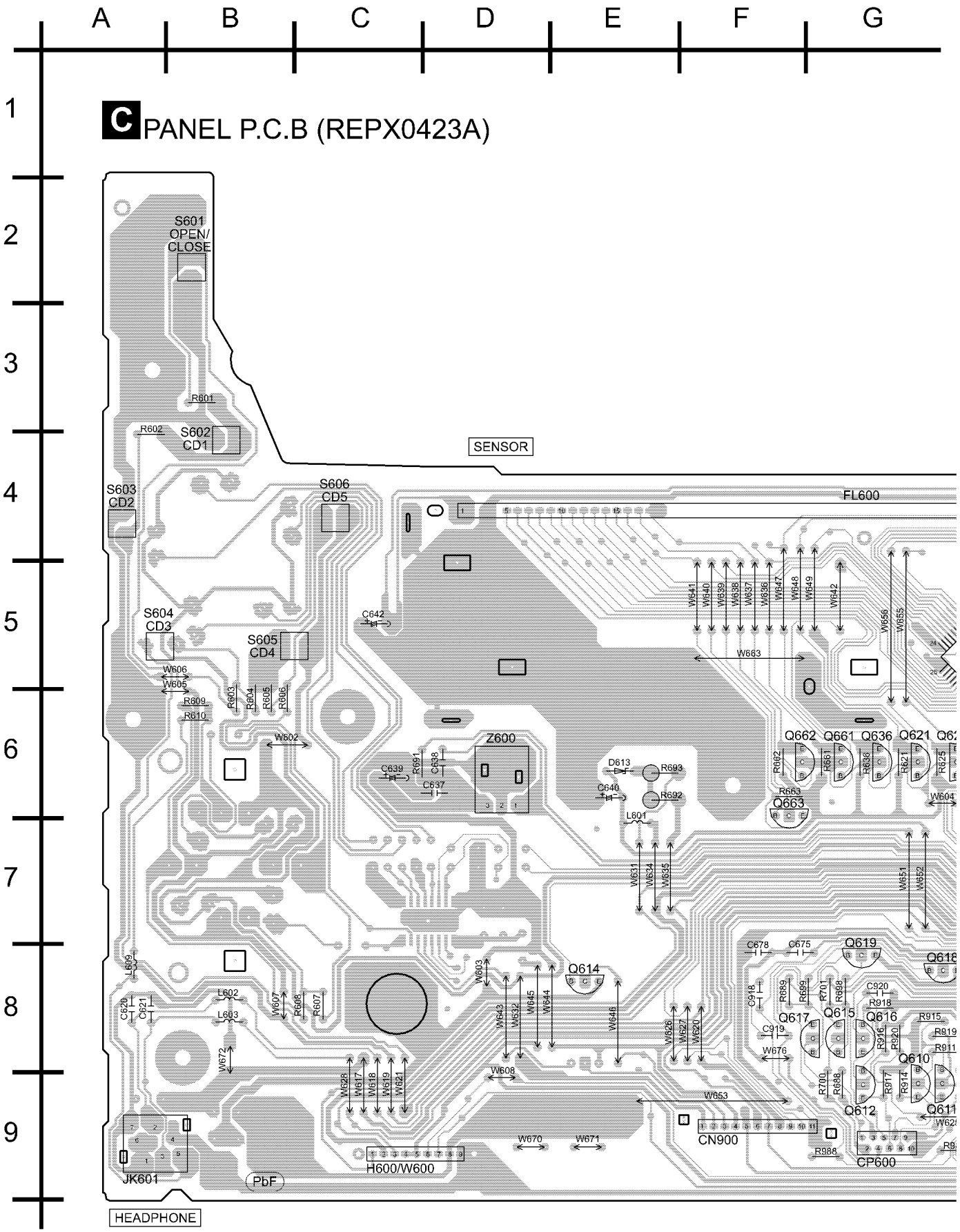

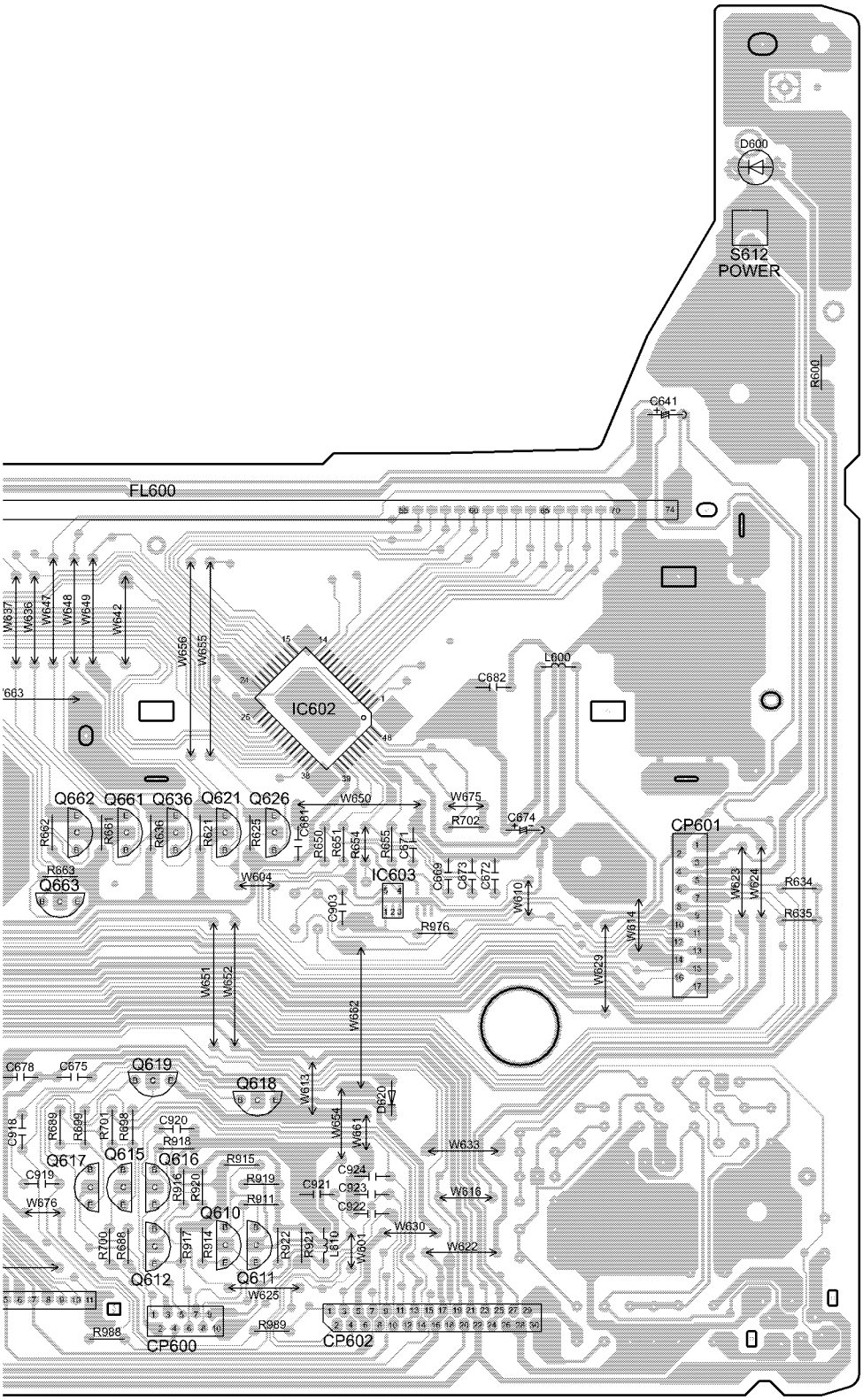
G
H
I
J
K
L
M
D600
S612
POWER
R600
C641
FL600
W637
W636
W647
W648
W649
W642
W656
W655
IC602
C682
L600
Q662
Q661
Q636
Q621
Q626
W650
W675
R702
C674
CP601
R662
R661
R636
R621
R625
C681
R650
R651
R654
R655
C671
C669
C673
C672
R663
Q663
W604
IC603
C903
R976
W610
W623
W624
R634
R635
W614
W629
W651
W652
W662
C678
C675
Q619
Q618
W613
D620
W654
W661
W633
C918
R699
R696
R701
R698
C920
R918
Q617
Q615
Q616
R915
R919
C924
C921
C923
W616
C919
R916
R920
R911
C922
W676
Q610
W630
R700
R688
R917
R914
R922
R921
L610
W601
W622
Q612
Q611
W625
R988
R989
CP600
CP602

18.4. (D) Tact Switch P.C.B.

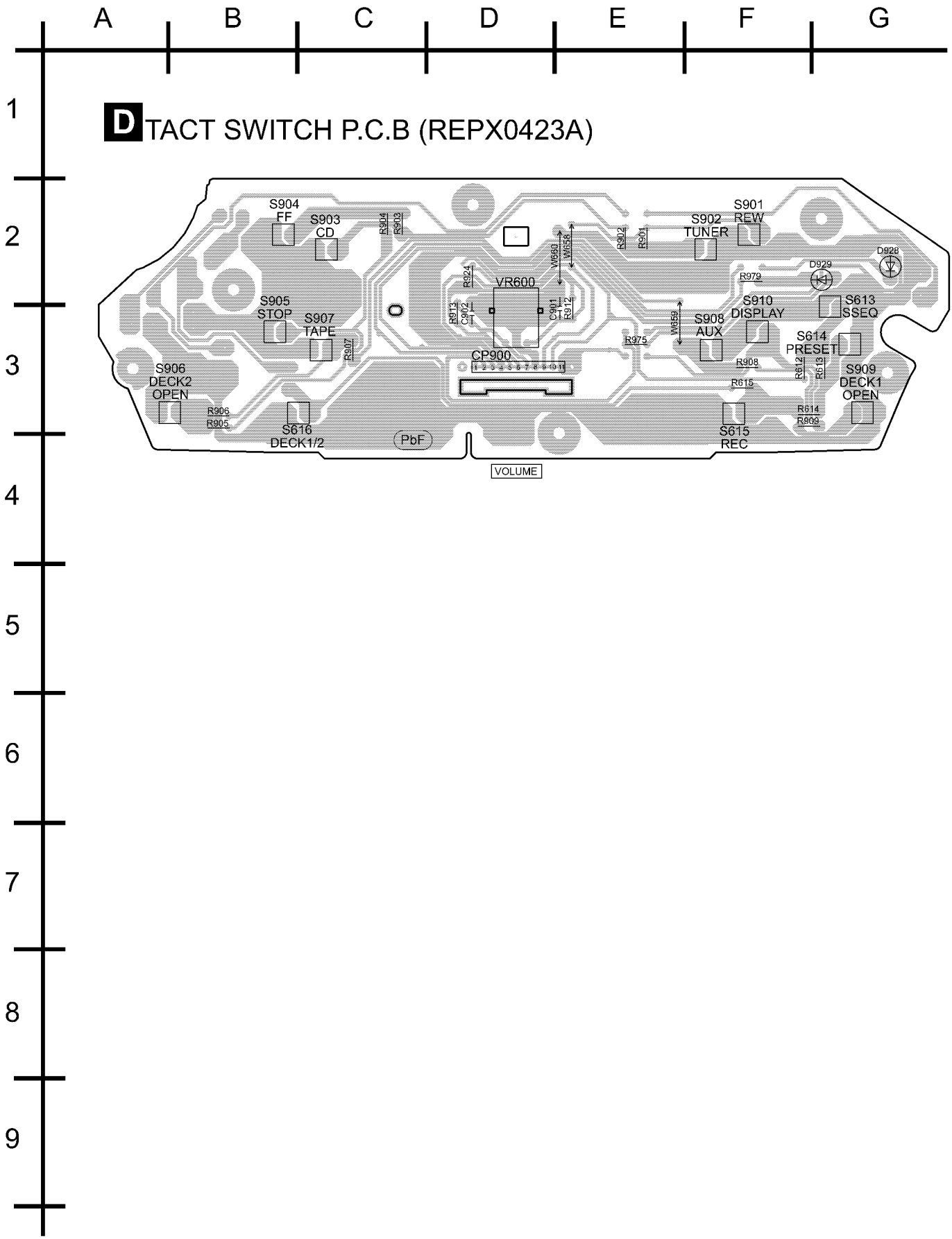

18.5. (E) Transformer P.C.B.

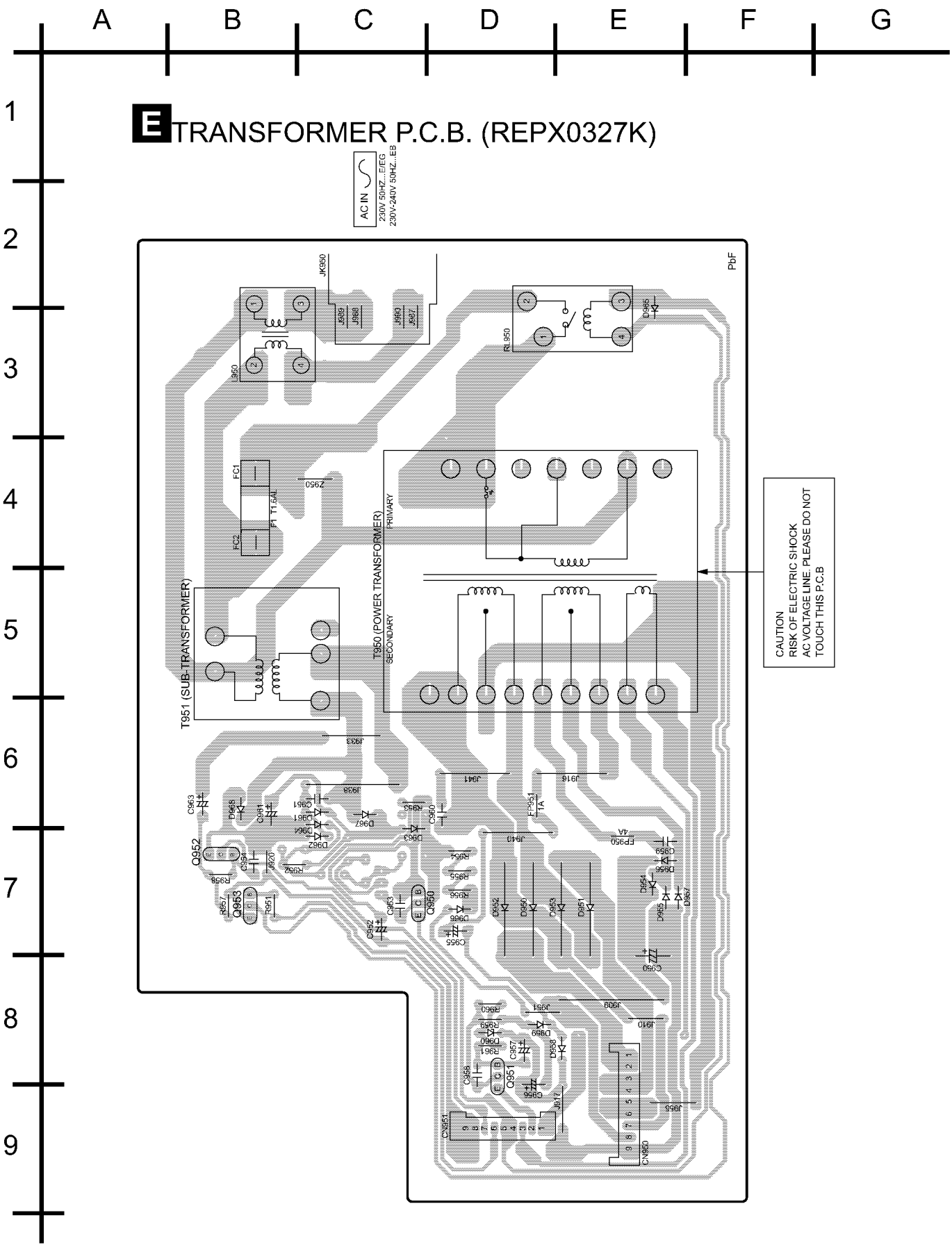

18.6. (F) CD Detect P.C.B., (G) Spindle Position P.C.B. and (H) CD Loading P.C.B.

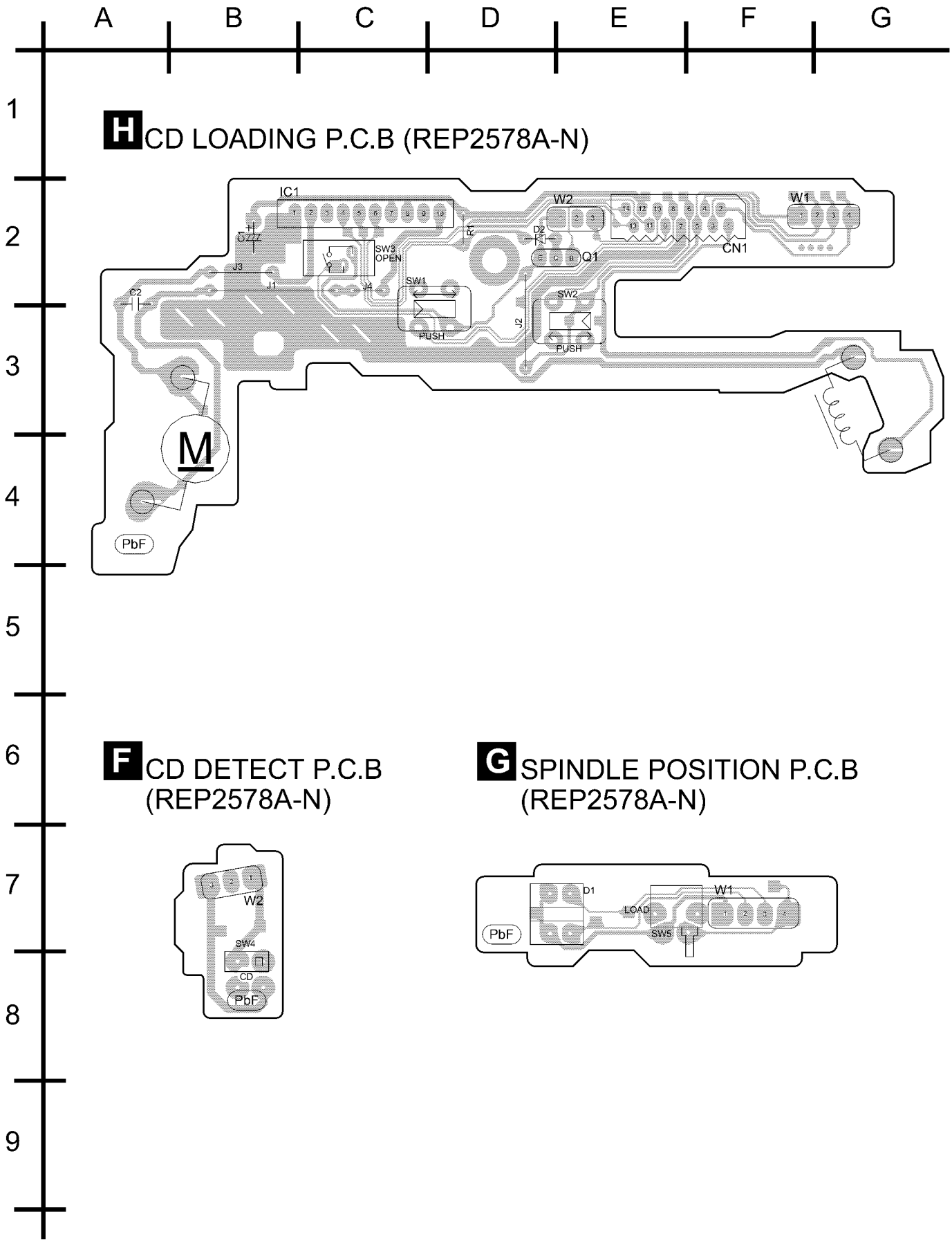

18.7. (I) Power P.C.B.

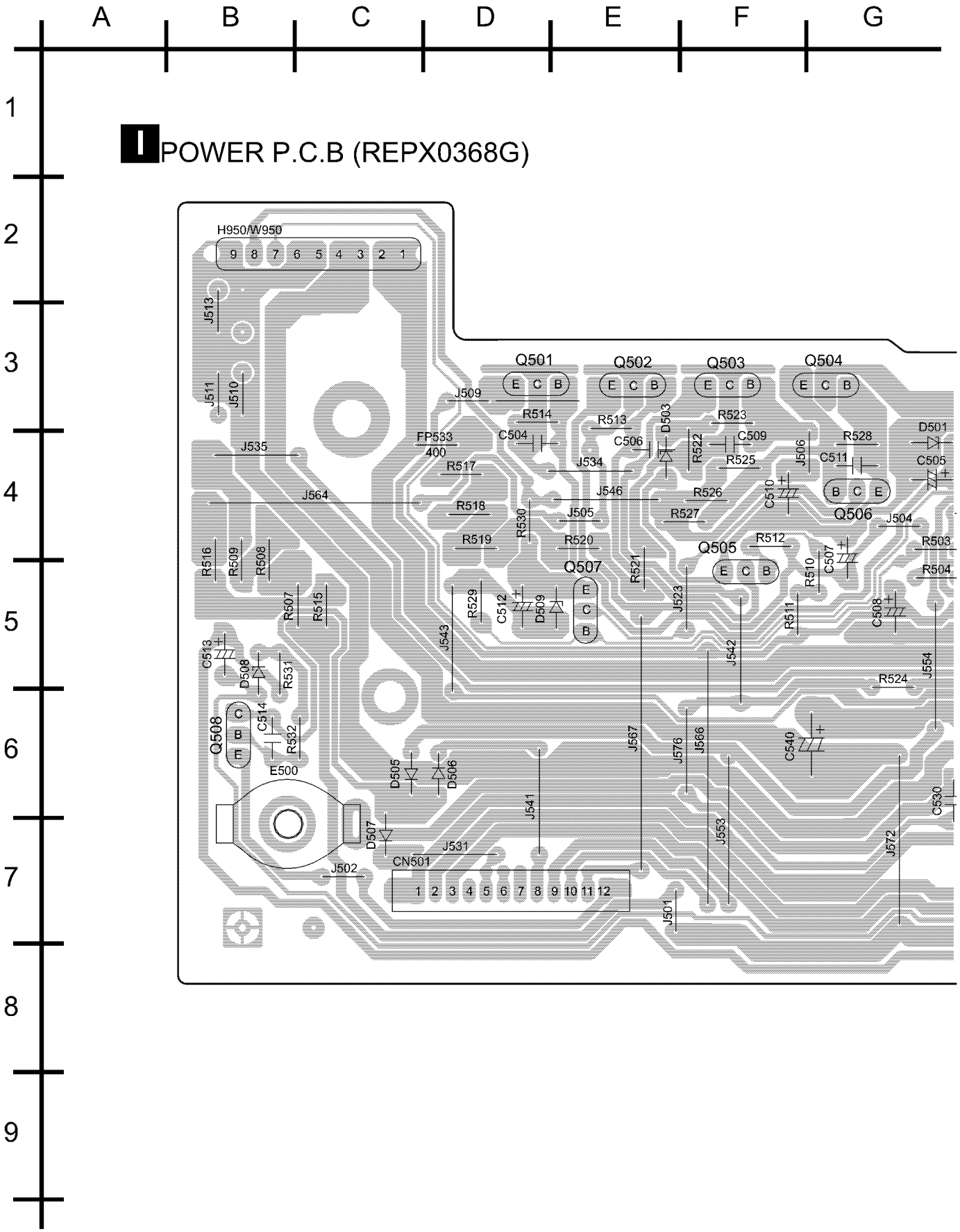

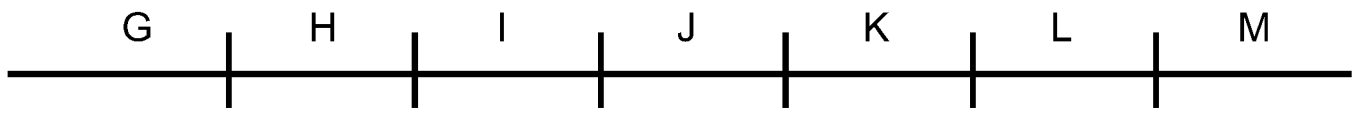

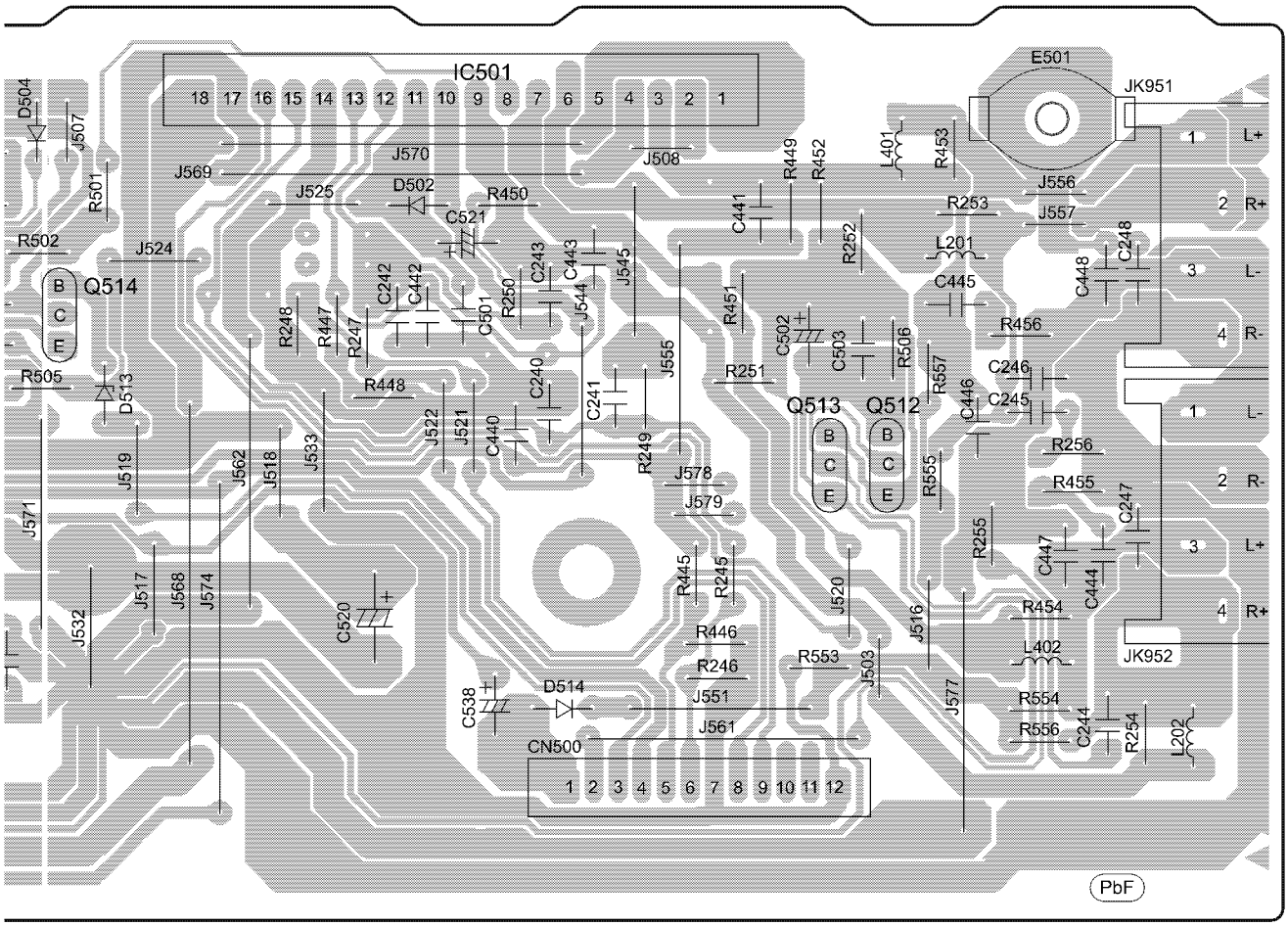

HIGH CH SPEAKERS

LOW CH SPEAKERS

18.8. (J) Deck P.C.B. & (K) Deck Mechanism P.C.B.

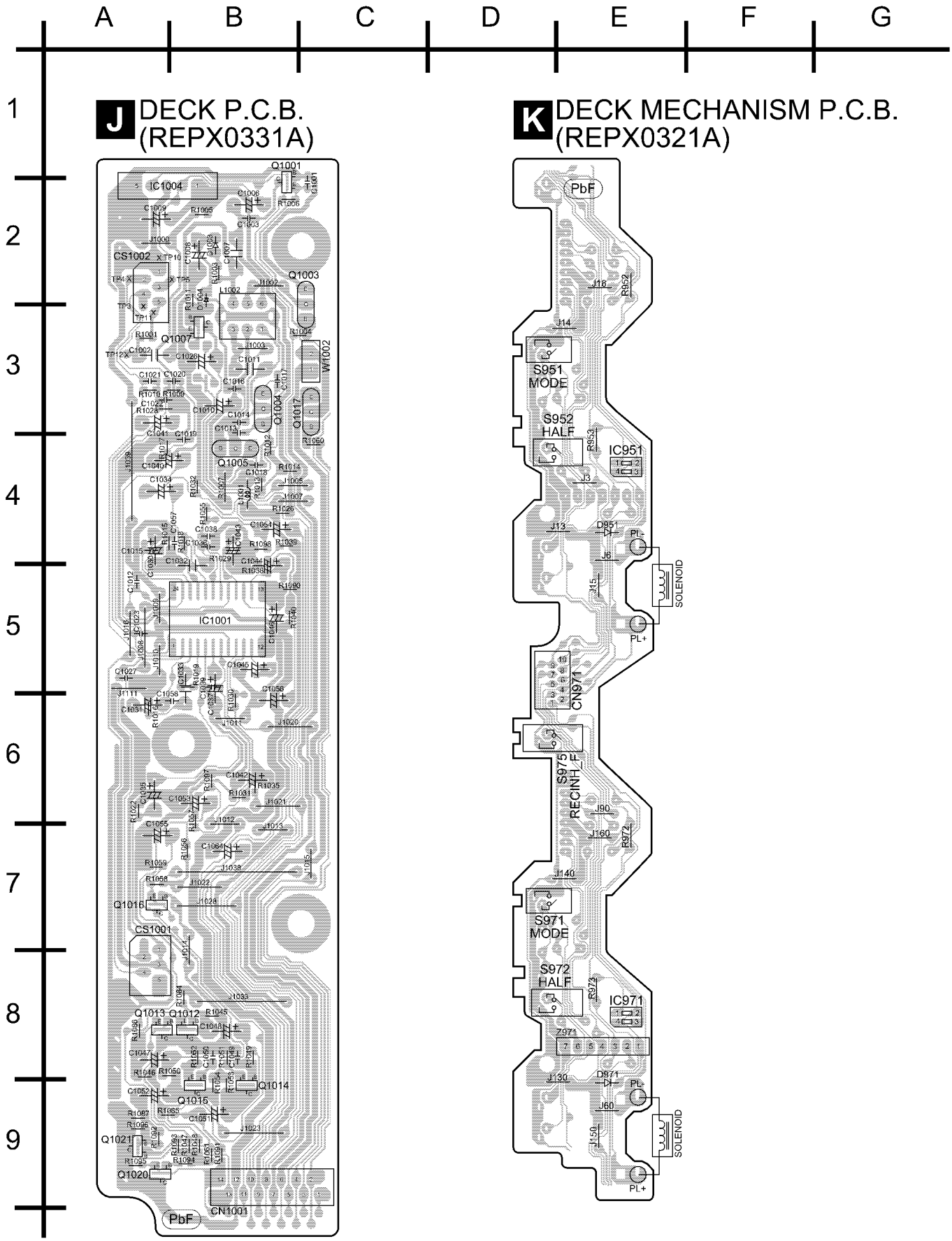

19 Wiring Connection Diagram

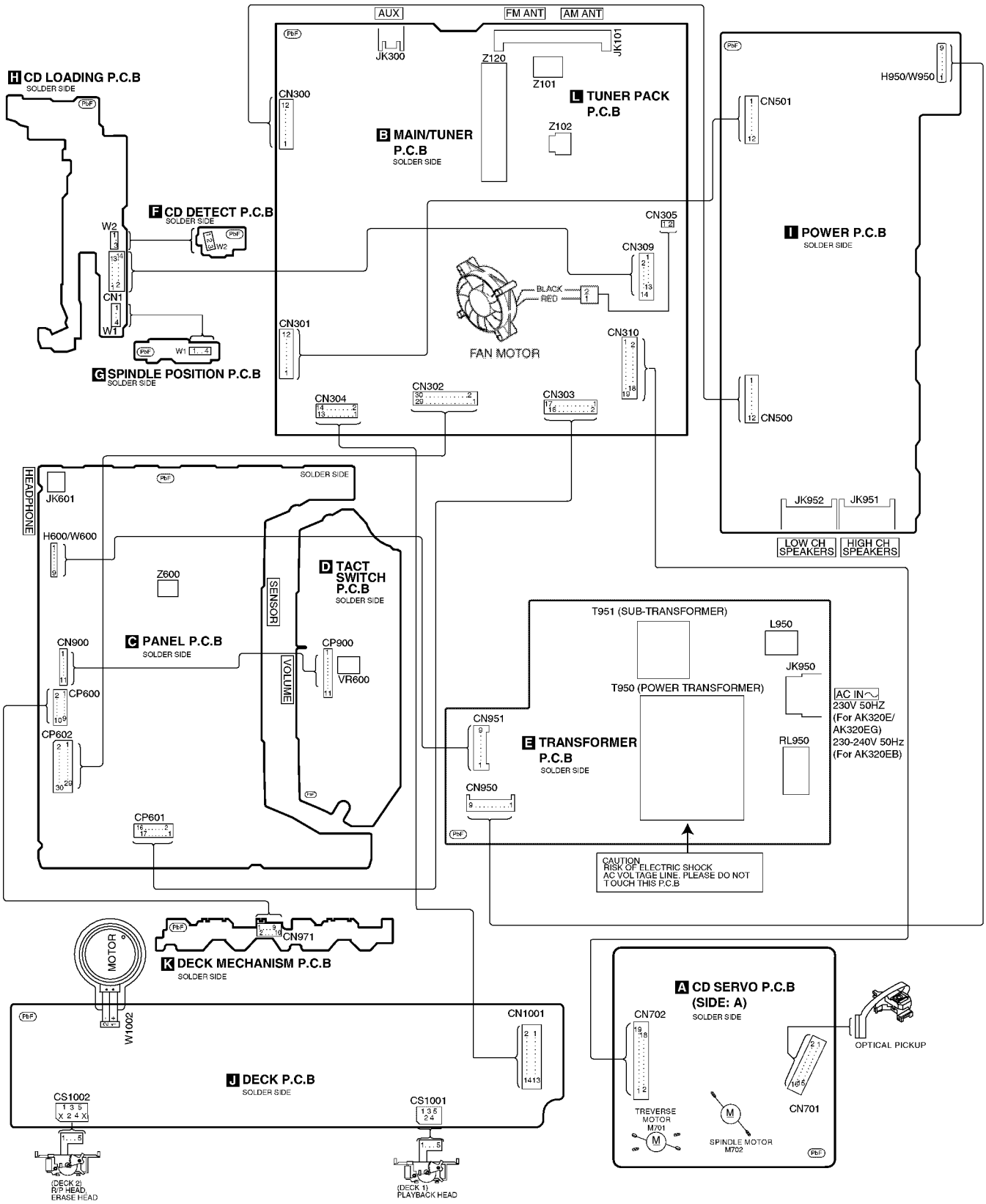

20 Illustration of IC's, Transistors and Diodes

C2CBJF000014 (100P) C0HBB0000040 (48P) MN6627934CH (80P) 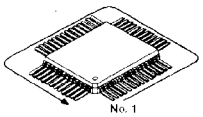	AN7348S-E1 (24P) AN22004A-NF (32P) C1BB00000747 (42P) C1BB00000715 (16P) C3ABMB000027 (26P) LA1833NMNTLM (24P) LC72131MDTRM (20P) 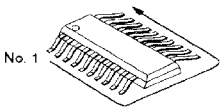		C1AA00000612 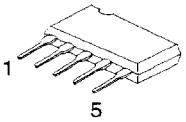	C0GAM0000005 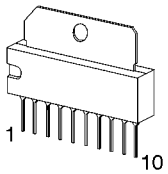	BR93LC46F22 C0AABB000117 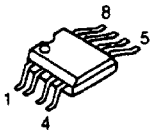
CNB13030R2AU 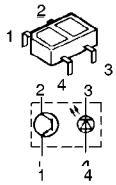	AN8739SBTE2 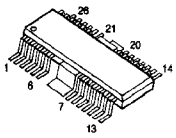	RSN315H42B-P 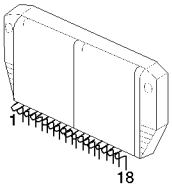	C0JBAE000192 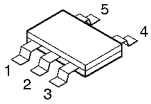	KRC102MTA KRC103MTA 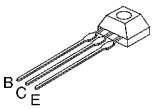	KTC2026 KTA1046 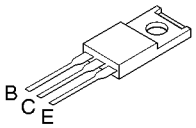
2SB621ARSTA B1AAKD000009 B1GCCFGA005 C1GCCFJJ0015 KTA12710YTA KTC3205YTA KTD1146YTA 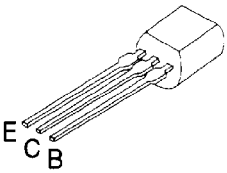		B1AAGC000007 KTA1267GRTA KTC3199GRTA B1GACFGG0004 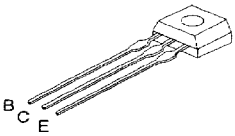		B1ABCF000011 B1ABCF000131 B1GBCFNA0019 B1GBCFJJ0039 B1GDCFJJ0023 KTC3875GRTA KTD1304TA B1ADCF000001 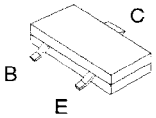	
2SC3311ARA 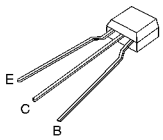	2SC2058SPTA 	GP1S94 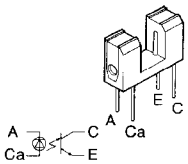	B0ACCE000003 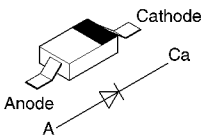	MAJ72900L 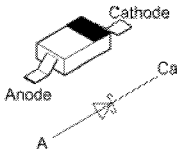	B0BC7R500001 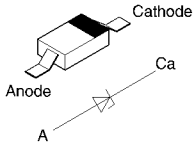
2SD0592ARA 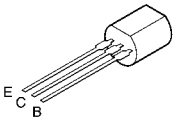	B0AACK000004 MA2J72800L MA2C16500E 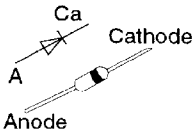		B0BA6R600008 B0BA7R200003 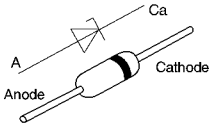	B0BA01500003 B0BA9R600002 B0BA5R600016 B0BA01400041 MTZJ39CTA 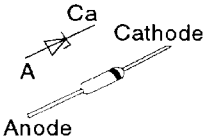	
B0BA4R600003 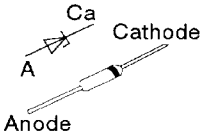	1T3T B0EAKM000122 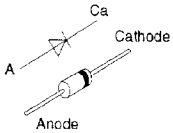	B0EAKM000117 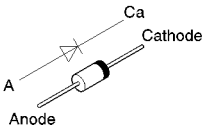	B0ADCC000002 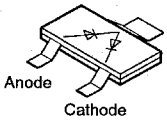	SLI325URCT31 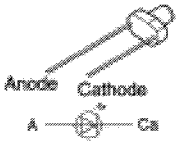	B0ADCJ000020 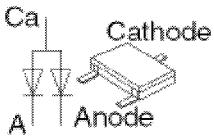
B0BC3R700004 B0ACCK000005 B0BC5R000009 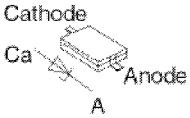					

21 Terminal Function of IC's

21.1. IC701 (AN22004A-NF) Head Amplifier

Pin No.	Mark	I/O	Function
1	LPD	I	APC Amp input
2	LD	I	APC Amp output
3	VCC	I	Power supply
4	EQSW	I	Focus signal input terminal 1
5	RFOUT	I	RF summing output
6	RFIN	I	AGC input
7	CAGC	O	AGC Control
8	ARF	O	AGC output
9	CEA	I	Detector's input
10	3TOUT	I	3 T output
11	DCDET	I	Capacitor for HPF amp connection
12	OFTCONT	O	Capacitor 4 OFTR connection
13	BDO	I	BDO output ("H": Drop_out)
14	OFTR	O	OFTR output
15	/RFDET	O	NRFDET output ("L" : detection)
16	LDON	O	Power-down input
17	GND	-	GND
18	EQ8ST	O	OFTR/BDO
19	VREF	-	VREF
20	TEN	I	TE Amp input
21	TEOUT	I	TE Amp output
22	FEN	I	FE Amp input
23	FEOUT	O	FE Amp output
24	GCTL	O	GCTL
25	FBAL	I/O	Focus Balance Control
26	TBAL	O	Tracking balance Control
27	E	I	Tracking balance control
28	F	I	Focus balance control
29	D	I	
30	B	I	
31	C	I	
32	A	I	

21.2. IC702 (MN6627934CH) Servo Processor/ Digital Signal Processor/ Digital Filter/ D/A Converter

Pin No.	Mark	I/O	Function
1	DRVDD	-	Power supply for DRAM interface (Pin 2 to 19 and 80)
2	D0	I/O	DRAM data I/O signal 0
3	D1	I/O	DRAM data I/O signal 1
4	NEW	O	DRAM write enable signal
5	NRAS	I/O	DRAM RAS control signal
6	D2	I/O	DRAM data I/O signal 2
7	D3	I/O	DRAM data I/O signal 3
8	NCAS0	O	DRAM CAS control signal 0
9	A10	O	DRAM CAS control signal 10
10	A8	O	DRAM address signal 8
11	A7	O	DRAM address signal 7
12	A6	O	DRAM address signal 6
13	A5	O	DRAM address signal 5
14	A4	O	DRAM address signal 4
15	A9	O	DRAM address signal 9
16	A0	O	DRAM address signal 0
17	A1	O	DRAM address signal 1
18	A2	O	DRAM address signal 2
19	A3	O	DRAM address signal 3
20	DVSS2	-	Ground for digital circuits
21	DVDD2	-	Power supply for digital cirfcuits
22	SPOUT	O	Spindle motor drive signal output (absolute value output)
23	TRVP	O	Traverse drive output (positive polarity output)
24	TRVM	O	Traverse drive output (negative porarity output)
25	TRP	O	Tracking drive output (positive polarity output)
26	TRM	O	Tracking drive output (negative polarity output)
27	FOP	O	Focus drive output (positive polarity output)
28	FOM	O	Focus drive output (negative polarity output)
29	IOVDD1	-	Power supply for I/O
30	TBAL	O	Tracking balance adjustment output
31	FBAL	O	Focus balance adjustment output
32	FE	I	Focus error signal input (analog input)
33	TE	I	Tracking error signal input (analog input)
34	RFENV	I	RF envelope signal input (analog input)
35	OFT	I	Off-track signaL input High: Off-track)
36	NRFDET	I	RF detection signal input Low: detection
37	BDO	I	Dropout signal input High: Dropout
38	LDON	O	Laser ON signal output High: ON
39	ARF	I	RF signal input
40	IREF	I	Reference current input
41	ADPVCC	I	Voltage input for supply voltage monitor (analog input)
42	DSLF	O	DSL loop filter
43	RFSW	I	DSL loop filter
44	PLLF	O	PLL loop filter
45	PLLFO	O	PLL loop filter
46	AVDD2	-	Power supply for analog circuits (for DSL, PLL and A/D)
47	AVSS2	-	Ground for analog circuits (for DSL, PLL and A/D)
48	OUTL	O	L-ch audio output
49	AVSS1	-	Ground for analog circuits (for audio output stage)
50	OUTR	O	R-ch audio output
51	AVDD1	-	Power supply for analog circuits (for audio output stage)
52	DVSS3	-	Ground for digital circuits
53	DVDD3	-	Power supply for digital circuit
54	TMOD2	I	Test input pin Low: Normal
55	FLAG	O	Flag signal output
56	EXT2	I/O	Expansion I/O port 2
57	EXT0	I/O	Expansion I/O port 0
58	EXT1	I/O	Expansion I/O port 1
59	IOVDD2	I	Power supply for I/O
60	TX	O	Digital audio interface output signal
61	MCLK	I	Micro controller command clock signal input (Latches data at the rising adge)

Pin No.	Mark	I/O	Function
62	MDATA	I	Micro controller command data signal input
63	MLD	I	Micro controller command load signal input Low: Load
64	BLKCK	O	Subcode block clock signal (f=75 Hz in normal-speed playback mode)
65	PWMSEL	I	PWM output mode selection input Low: Direct High: 3-state
66	SMCK	O	4.2336 MHz/ 8.4672 MHz clock signal output
67	SBCK	I	Clock input for subcode serial output
68	STAT	O	Status signal output
69	NRST	I	Reset input Low: Reset
70	SPPOL	O	Spindle motor drive signal output (polarity output)
71	PMCK	O	88.2-kHz clock signal output
72	DQSY	O	Pack signal output for CD-TEXT data
73	TXTD	O	CD-TEXT data signal output
74	TXTCK	O	External clock signal input for CD-TEXT register
75	NTEST	I	Test input pin High: Normal
76	OUT X2	O	Crystal oscillator circuit output pin (f=16.9355 MHz, 33.8688 MHZ)
77	IN X1	I	Crystal oscillator circuit output pin (f=16.9355 MHz, 33.8688 MHZ)
78	DVSS1	I	Ground for digital circuits
79	DVDD1	I	Power supply for digital circuits
80	MON	O	Monitor for evaluation

21.3. IC703 (AN8739SBTE2) Focus Coil/ Tracking Coil/ Traverse Motor/ Spindle Motor Driver

Pin No.	Mark	I/O	Function
1	/RST	O	RESET output terminal
2	NC	-	N.C.
3	IN2	I	Motor drive (2) input
4	PC2	I	Turntable motor drive signal (“L” :ON)
5	NC	-	N.C.
6	IN1	I	Motor driver (1) input
7	PVCC1	I	Power supoply (1) for driver
8	PGND1	-	Ground connection (1) for driver
9	NC	-	N.C.
10	D1-	O	Motor driver (1) reverse-action output
11	D1+	O	Motor driver (1) forward-action output
12	D2-	O	Motor driver (2) reserse-action output
13	D2+	O	Motor driver (2) forward-action output
14	D3-	O	Motor driver (3) reverse-action output
15	D3+	O	Crystal oscillating circuit input (f = 16.9344MHz)
16	D4-	O	Motor driver (4) reverse-action output
17	D4+	O	Motor driver (4) forward-action output
18	NC	-	N.C.
19	PGND2	-	Ground connection (2) for driver
20	PVCC2	-	Power supply (2) for driver
21	VCC	-	Power supply terminal
22	VREF	-	Reference voltage input
23	IN4	I	Motor driver (4) input
24	IN3	I	Motor driver (3) input
25	RSTIN	I	Reset terminal
26	NC	-	N.C.

21.4. IC305 (C2CBJF000014) System Microprocessor

Pin No.	Mark	I/O	Function
1	LM_1/SPE_IN	O	Level meter left (for AK320) /SPEANA Input (for AK520) NC (for AK220)
2	LM_2	O	Level meter right (for AK320)/ NC (for AK520/220)
3	NC	-	No connection
4	RDS_DAT	I	RDS data input (for AK320)/ NC for AK520/220)
5	RDS_CLK	I	RDS clock input (for AK320) NC (for AK520/220)
6	MBP1	O	Microcomputer beat proof output 1 (CONTROL)
7	MBP2	O	Micro computer beat proof output 2 (CONTROL)
8	BYTE	-	External data bus width select input (Connect to ground)
9	CNVSS/EFP_PGM/O E/MD	-	Flash mode terminal (Connect to ground)
10	XCIN	-	32.768 kHz sub clock
11	XCOUT	-	32.768 kHz sub clock
12	/RESET/EFP_RESET	I	Reset input (ACTIVE L)
13	XOUT	O	10 MHz main clock
14	Vss	-	Ground (0V)
15	XIN	-	10 MHz main clock
16	Vcc	-	Power supply (+5V)
17	/NMI	-	Connect to Vcc (+5V)
18	RMT	I	Remote control input
19	BLKCK	I	CD block clock input (Inverted)
20	SYNC	I	AC failure detect input
21	ST/DO	I	Tuner IF data/ stereo input
22	SD	I	Tuner signal detect input
23	PLLCK	O	Tuner PLL clock output
24	PLLDA	O	Tuner PLL data output
25	PLLCE	O	Tuner PLL Chip Enable
26	ASP_DAT	O	ASP data
27	ASP_CLK	O	ASP clock
28	NC	-	No connection
29	SW_LVL1	-	Sub Woofer Level 1 (AK520 only)/ No connection (AK320/220)
30	SW_LVL2	-	Sub Woofer Level 2 (AK520 only)/ No connection (AK320/220)
31	NC/ EFP_TxD1	-	No connection
32	NC/ EFP_RxD1	-	No connection
33	NC/EFP_SCLK	-	No connection
34	NC/ EFP_BUSY	-	No connection
35	NC	-	No connection
36	NC	-	No connection
37	NC	-	No connection
38	NC	-	No connection
39	MUTE_H	O	HIC mute
40	MUTE_A	O	Audio mute
41	EE_CS/EFP_/EPM	O	EEPROM chip select
42	EE_CLK	O	EEPROM clock
43	EE_DAT	I/O	EEPROM data
44	NC	-	No connection

Pin No.	Mark	I/O	Function
45	NC	-	No connection
46	PCONT/EFP_/CE	O	Main transformer control output
47	DCDET	I	DC detect input
48	SP_A	O	Speana control output A
49	SP_B	O	Speana control output B
50	SP_C	O	Speana control output C
51	NC	-	No connection
52	HALF_1	I	Deck 1 half playback input
53	MODE_1	I	Deck 1 mode playback input
54	PHOTO_2	I	Rotation detection signal (Deck 2)
55	PHOTO_1	I	Rotation detection signal (Deck 1)
56	PLG1	O	Deck 1 plunger control
57	PLG2	O	Deck 2 plunger control
58	MTR	O	Deck motor control (“H” for motor ON)
59	REC	O	H when record circuit is operating
60	DECK1_H	O	H when DECK 1 P/B head is selected
61	NC	-	No connection
62	Vcc	-	Power supply (+5V)
63	NC	-	No connection
64	Vss	-	Ground (0V)
65	DMT	O	Deck mute at mecha transition (“L” for MUTE ON)
66	BP1	O	AM beatproof 1 output (“H” for BP1 ON)
67	V_JOG_A	I	Volume Jog A
68	V_JOG_B	I	Volume Jog B
69	EX1_CLK	O	I/O expander clock output (for AK620) (Subwoofer and Jog LED control)
70	EX1_DAT	O	I/O expander data output (for AK520) (Subwoofer and jog LED control)
71	/FL_RESET	I	Reset input (ACTIVE L)
72	FL_CS	I/O	FL driver chip select
73	FL_DOUT	O	Serial data to FL driver (Output)
74	FL_CLK	I/O	Serial clock to FL driver
75	/CD	O	CD power control (Active low)
76	SSEQ_LED	O	Super Sound EQ LED
77	CD_RST	O	CD reset output
78	STATUS	I	CD Servo LSI status input
79	MLD	O	CD command load output
80	MDATA_OUT	O	CD command data output
81	MCLK	O	CD command clock output
82	/RESTSW	I	CD limit switch input for the most inner point (Active Low)
83	CHG_HLF	O	Changer half drive output
84	CHG_CW	O	Changer motor clockwise output
85	CHG_CCW	O	Changer motor counterclockwise output
86	CHG_SW1	I	CD changer switch 1 input
87	CHG_SW2	I	CD changer switch 2 input
88	CHG_PLR	O	Changer plunger output
89	CHG_AD2	I	Changer AD detecton input (Position/Bottom)
90	CHG_AD1	I	Changer AD detecton input (Open/Clamp)
91	DECK2	I	DECK CONDITION INPUT 2 (R_INHF/MODE2/R_INHR/HALF2)
92	KEY3	I	KEY3 INPUT
93	KEY2	I	KEY2 INPUT
94	KEY1	I	KEY1 INPUT
95	REG_2	I	Region setting 2
96	AVss	-	Analog power supply input (Connect to GND)
97	REG1	I	Region setting 1
98	VREF	-	Reference for A-D (5V)
99	AVcc	-	Analog power supply input

Pin No.	Mark	I/O	Function
100	DEMO SELECTOR	I	(H= default demo on, L= default demo off.)

22 Troubleshooting Guide

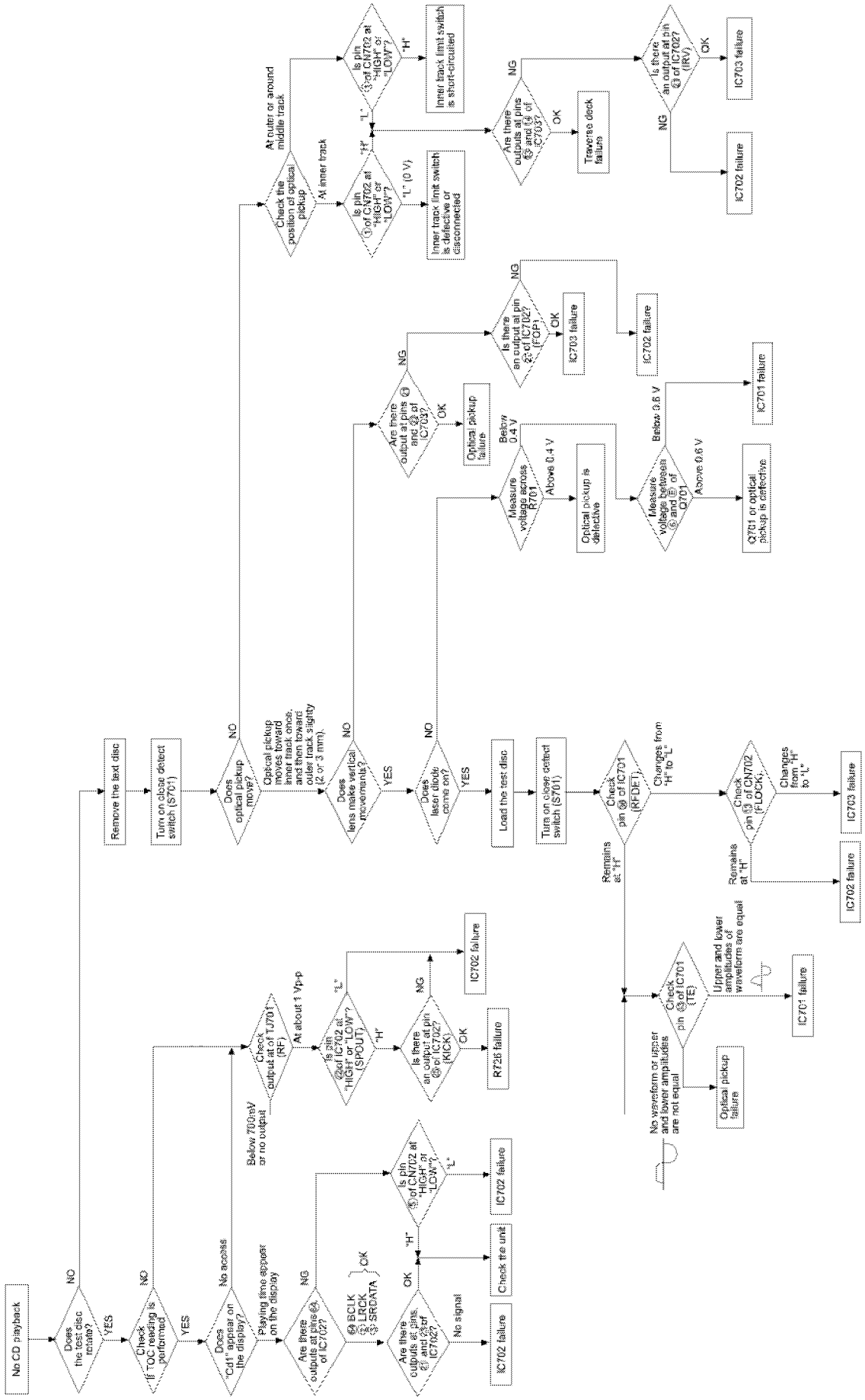

23 Parts Location and Replacement Parts List

Notes:

- Important safety notice:

  Components identified by ⚠ mark have special characteristics important for safety.

  Furthermore, special parts which have purposes of fire-retardent (resistors), high-quality sound (capacitors), low noise (resistors), etc are used.

  When replacing any of these components, be sure to use only manufacturer's specified parts shown in the parts list.
- The parenthesized indications in the Remarks columns specify the areas or colour. (Refer to the cover page for area or colour)

  Parts without these indications can be used for all areas.
- Warning: This product uses a laser diode. Refer to caution statements on "Precaution of Laser Diode".

  ACHTUNG:

  – Die Lasereinheit nicht zerlegen.

  – Die Lasereinheit darf nur gegen eine vom Hertsteller spezifizierte Einheit ausgetauscht werden.
- Capacitor values are in microfarads (μF) unless specified otherwise, P= Pico-farads (pF), F= Farads.
- Resistance values are in ohms, unless specified otherwise, 1K=1,000 (OHM).
- The marking (RTL) indicates that the Retention Time is limited for this items. After the discontinuation of this assembly in production, the item will continue to be available for a specific period of time. The retention period of a availabilityis dependent on the type of assembly, and in accordance with the laws governing part and product retention. After the end of this period, the assembly will no longer be available.
- [M] Indicates in the Remarks columns indicates parts supplied by **PAVCSG.**
- The "(SF)" mark denotes the standard part.
- Reference for O/I book languages are as follows:

Ar:	Arabic	Du:	Dutch	It:	Italian	Sp	Spanish
Cf:	Canadian French	En:	English	Ko:	Korean	Sw:	Swedish
Cz:	Czech	Fr:	French	Po:	Polish	Co:	Traditional Chinese
Da:	Danish	Ge:	German	Ru:	Russian	Cn:	Simplified Chinese
Pe:	Persian						

23.1. Deck Mechanism (RAA4502-S)

23.1.1. Deck Mechanism Parts Location

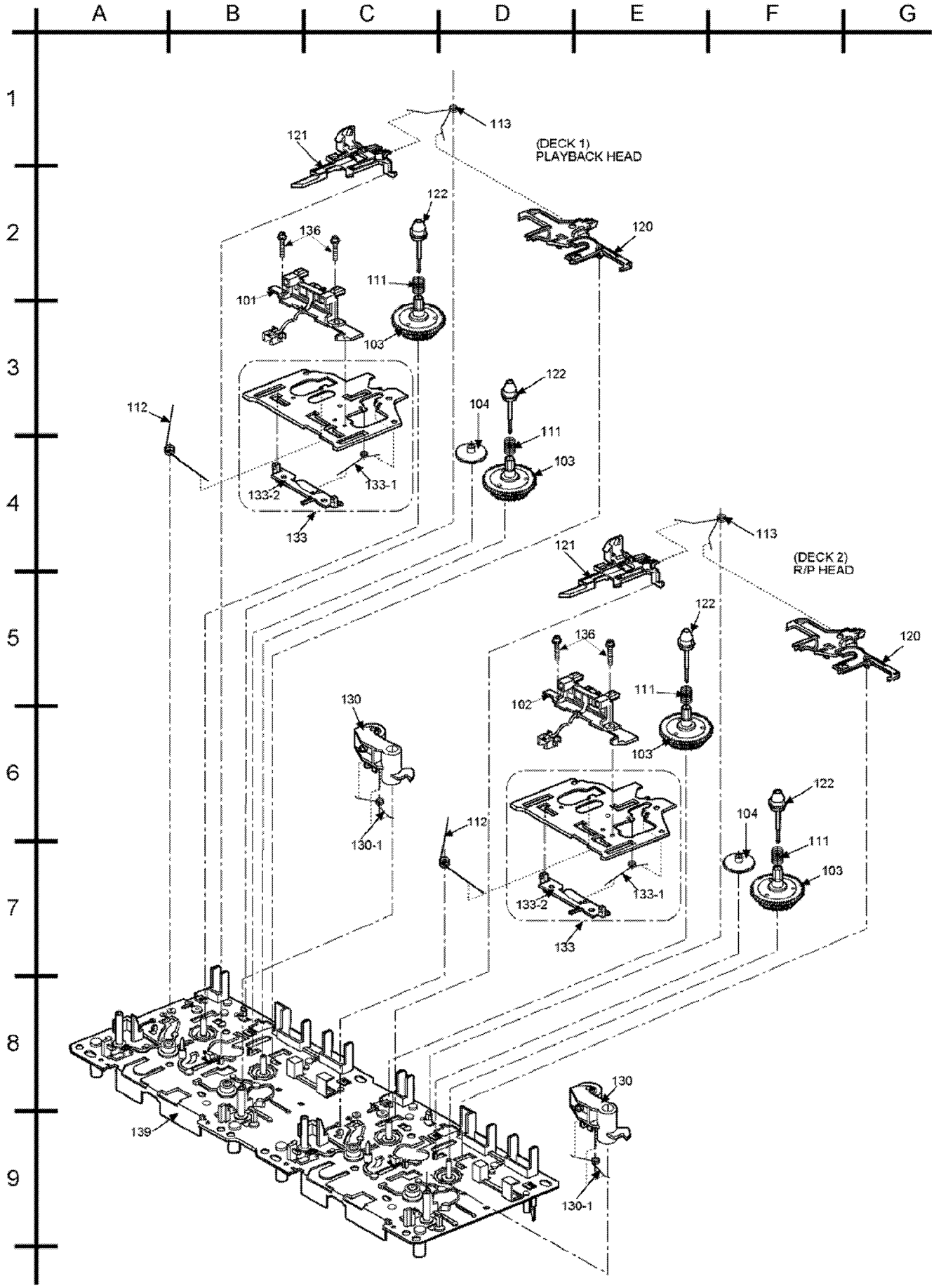

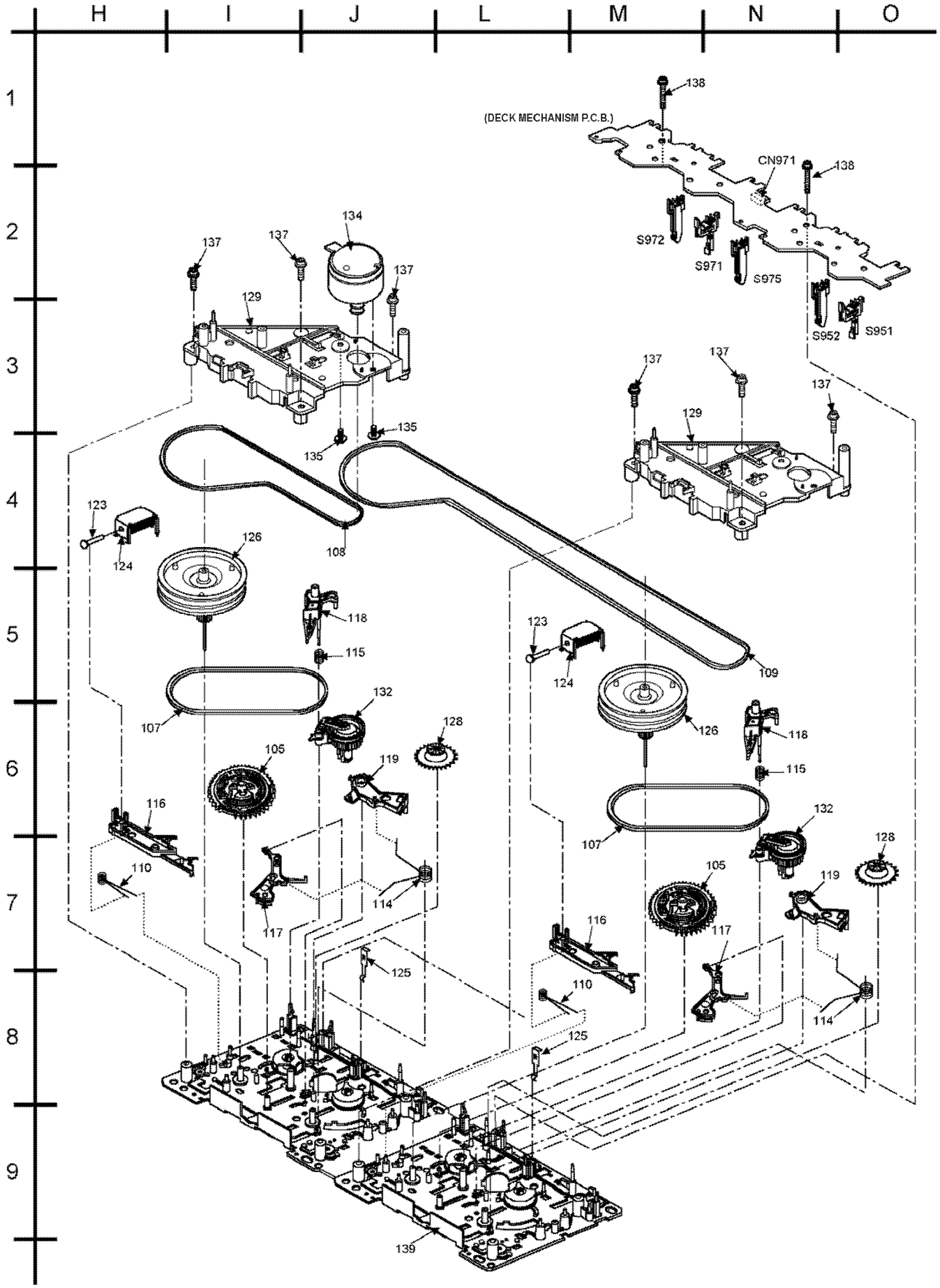
H
I
J
L
M
N
O
1
2
3
4
5
6
7
8
9
(DECK MECHANISM P.C.B.)
138
CN971
138
S972
S971
S975
S952
S951
134
137
137
137
129
135
135
137
137
137
129
123
124
126
108
118
115
123
124
109
107
132
128
126
118
105
119
115
116
107
132
128
110
105
119
114
117
116
117
125
110
114
125
139

23.1.2. Deck Mechanism Parts List

Ref. No.	Part No.	Part Name & Description	Remarks
		CASSETTE DECK	
101	RED0069	R/P HEAD BLOCK UNIT	[M]
102	RED0070	P/B HEAD BLOCK UNIT	[M]
103	RDG0300	REEL BASE GEAR	[M]
104	RDG0301	WINDING RELAY GEAR	[M]
105	RDK0026	MAIN GEAR	[M]
107	RDV0033-4	WINDING BELT	[M]
108	RDV0064	CAPSTAN BELT	[M]
109	RDV0071	CAPSTAN BELT B	[M]
110	RMB0312	TRIGGER LEVER SPRING	[M]
111	RMB0400	REEL SPRING	[M]
112	RMB0403	HEAB PANEL SPRING	[M]
113	RMB0404	BRAKE ROD SPRING	[M]
114	RMB0406	FR LEVER SPRING	[M]
115	RMB0408	THRUST SPRING	[M]
116	RML0370	TRIGGER LEVER	[M]
117	RML0371	FR LEVER	[M]
118	RML0372	WINDING LEVER	[M]
119	RML0374	EJECT LEVER	[M]
120	RMM0131	BRAKE ROD	[M]
121	RMM0133	EJECT ROD	[M]
122	RMQ0519	REEL HUB	[M]
123	RMS0398-1	MOVING CORE	[M]
124	RSJ0003	PLUNGER ASSY	[M]
125	RMC0061	PACK SPRING	[M]
126	RXF0061	FLYWHEEL F ASSY	[M]
128	RXG0040	FF RELAY GEAR ASSY	[M]
129	RMK0283A-J	SUB-CHASSIS	[M]
130	RXL0124	PINCH ROLLER F ASSY	[M]
130-1	RMB0401	PINCH ARM SPRING F	[M]
132	RXL0126	WINDING ARM ASSY	[M]
133	RXQ0412	HEAD PANEL ASSY	[M]
133-1	RMB0405	FR ROD SPRING	[M]
133-2	RMM0132	FR ROD	[M]
134	REM0088	CAP MOTOR ASSY	[M]
135	RHD26022	MOTOR SCREW	[M]
136	XTW2+5L	HEAD BLOCK UNIT SCREW	[M]
137	XTW26+10S	SUB-CHASSIS SCREW	[M]
138	XYC2+JF17	PCB EARTH SCREW	[M]
139	RFKJAA4501-S	CHASSIS ASSY	[M]

23.2. CD Loading Mechanism (RD-DAC026-S)

23.2.1. CD Loading Mechanism Parts Location

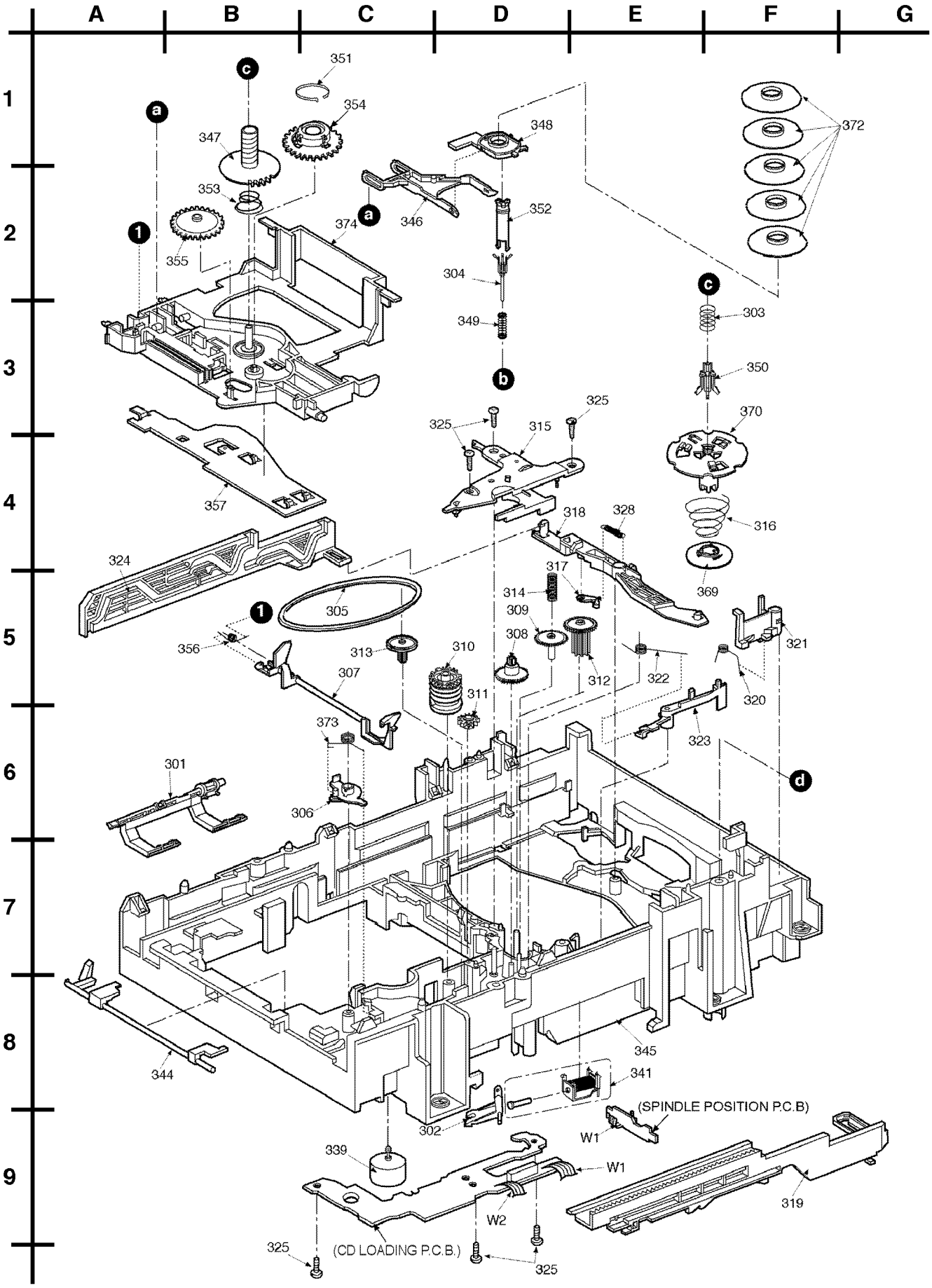

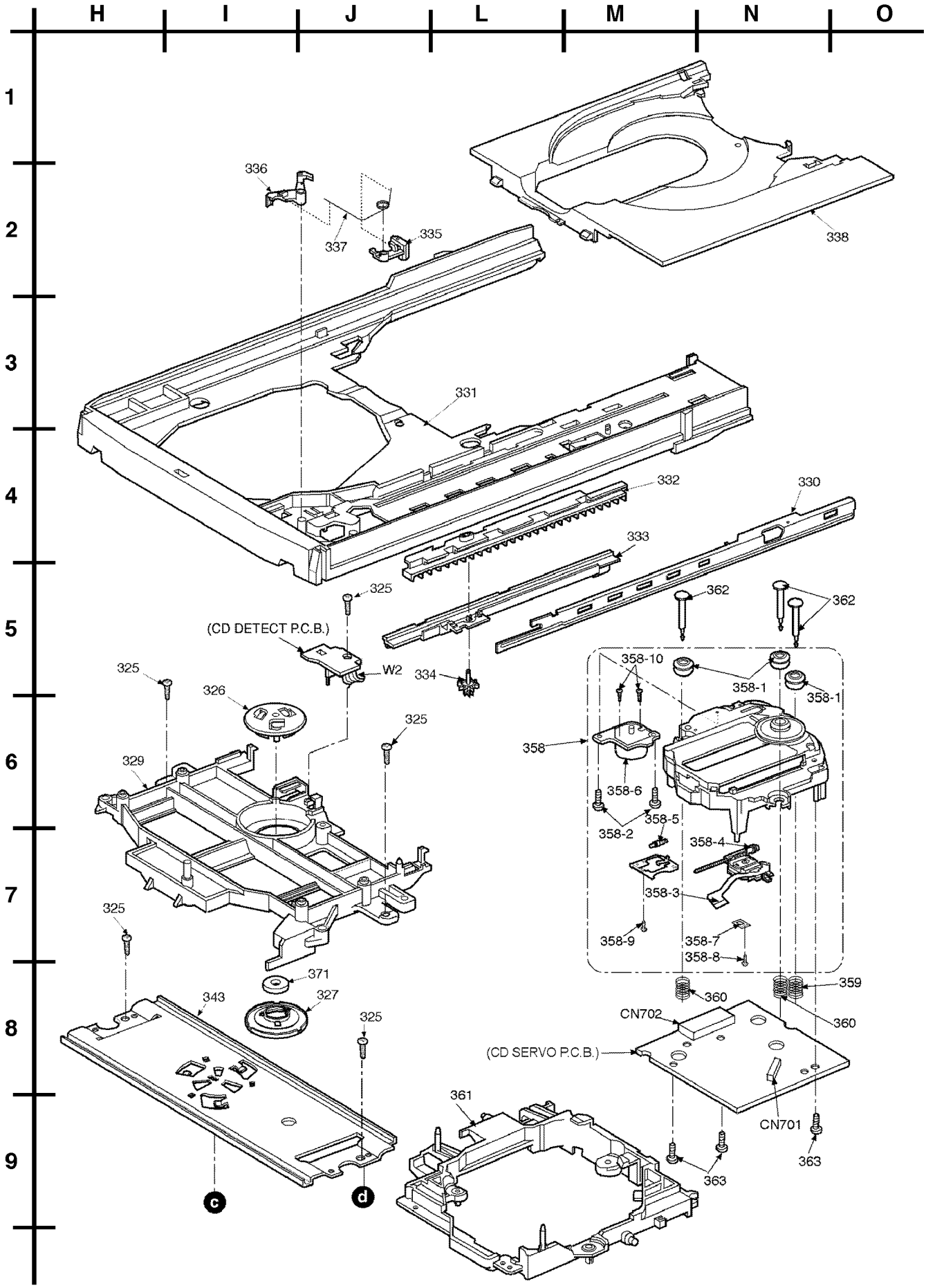
H
I
J
L
M
N
O
1
2
3
4
5
6
7
8
9
336
337
335
338
331
332
330
333
325
362
362
(CD DETECT P.C.B.)
W2
334
325
326
325
329
358-10
358-1
358-1
358
358-6
358-5
358-2
358-4
358-3
358-9
358-7
358-8
325
371
343
327
325
359
360
CN702
360
(CD SERVO P.C.B.)
361
CN701
363
363
c
d

23.2.2. CD Loading Mechanism Parts List

Ref. No.	Part No.	Part Name & Description	Remarks
		TRAVERSE DECK	
301	RML0517	TIMING LEVER	[M]
302	RML0516	PLUNGER LEVER	[M]
303	RMB0551	UPPER SPINDLE SPRING	[M]
304	RMQ0744	LOWER HOOK	[M]
305	RDV0056	BELT	[M]
306	RML0525	FRONT LOCK LEVER	[M]
307	RML0526	DISC LEVER	[M]
308	RDG0424	DRIVE GEAR	[M]
309	RDG0425	CHANGE GEAR	[M]
310	RDG0427	TRAVERSE CAM GEAR	[M]
311	RDG0428	TRAVERSE RELAY GEAR	[M]
312	RDG0426	UP/DOWN GEAR	[M]
313	RDG0429	PULLEY GEAR	[M]
314	RMB0549-1	CHANGE GEAR SPRING	[M]
315	RMQ0748	PITCH PLATE	[M]
316	RMB0553	PUSH SPRING	[M]
317	RML0530	ASSIST LEVER	[M]
318	RML0518	CONNECTION LEVER	[M]
319	RMM0201	SLIDE PLATE 1	[M]
320	RME0258	REAR LOCK SPRING	[M]
321	RML0521	REAR LOCK	[M]
322	RME0257	TRAY LOCK LEVER SPRI	[M]
323	RML0520	TRAY LOCK	[M]
324	RMM0202	SLIDE PLATE 2	[M]
325	XTB3+10J	SCREW	[M]
326	RMR0334	FIXED PLATE	[M]
327	RMR0624-W2	CLAMPER	[M]
328	RMB0561	ASSIST LEVER SPRING	[M]
329	RMR1121-K	MECHA COVER	[M]
330	RMA1110-2	TRAY ANGLE	[M]
331	RMR1122-H1	TRAY BASE	[M]
332	RMM0204	CARRIER	[M]
333	RMM0203	DRIVE RACK	[M]
334	RDG0432	SPEED UP GEAR	[M]
335	RML0524	SLIDE LOCK	[M]
336	RML0523	CARRIER LOCK	[M]
337	RME0260-1	SLIDE LOCK SPRING	[M]
338	RMR1123-H	TRAY	[M]
339	RXQ0595	MOTOR SUB ASS'Y	[M]
341	RSJ0003	SOLENOLD ASS'Y	[M]
343	RMA1106	UPPER PLATE	[M]
344	RML0519	CD LEVER	[M]
345	RFKNAAK27GCS	MECHA BASE ASS'Y	[M]
346	RML0522	TURNING STOPPER	[M]
347	RMQ0745	LOWER SPINDLE	[M]
348	RMQ0746	UP/DOWN BASE	[M]
349	RMB0550	LOWER SPINDLE SPRING	[M]
350	RMQ0747	UPPER HOOK	[M]
351	RME0263	CLICK SPRING	[M]
352	RMQ0743	SPINDLE SHAFT	[M]
353	RMB0552	CUSHION SPRING	[M]
354	RDG0430	RELAY GEAR 'A'	[M]
355	RDG0431	RELAY GEAR 'B'	[M]
356	RME0262	DISK LEVER SP.	[M]
357	RMA1105	SUPPORT PLATE	[M]
358	RAE0153Z-S	TRAVERSE	[M]
358-1	SHGD113-1	FLOATING CUSHION	[M]
358-2	SNSD38	TRV MOTOR ASSY SCREW	[M]
358-3	RAF0152A-S	OPU ASS'Y	[M]
358-4	RDG0247	DRIVE GEAR	[M]
358-5	RDG0248	RELAY GEAR	[M]
358-6	RXQ0339	TRAVERSE MOTOR ASS'Y	[M]
358-7	RXQ0304-1	NUT PLATE ASS'Y	[M]
358-8	XQN17+CG5	NUT PLATE ASSY SCREW	[M]
358-9	XQS2+A3FZ	SPINDLE MOTOR SCREW	[M]
358-10	XQS17+A35FZ	TRAVERSE MOTOR SCREW	[M]
359	RME0142	FLOATING SPRING A	[M]
360	RME0109	FLOATING SPRING B	[M]
361	RMR1124A-K	TRAVERSE CHASSIS	[M]
362	RMS0632	TRAVERSE PIN	[M]

Ref. No.	Part No.	Part Name & Description	Remarks
363	XTN2+6G	SCREW	[M]
369	RMX0141	PUSH SPACER	[M]
370	RMQ0749	UPPER SPINDLE	[M]
371	RHM0001	MAGNET	[M]
372	RMX0140	DISC SPACER	[M]
373	RME0261	FRONT LOCK SPRING	[M]
374	RMQ0742	SPINDLE BASE	[M]

23.3. Cabinet

23.3.1. Cabinet Parts Location

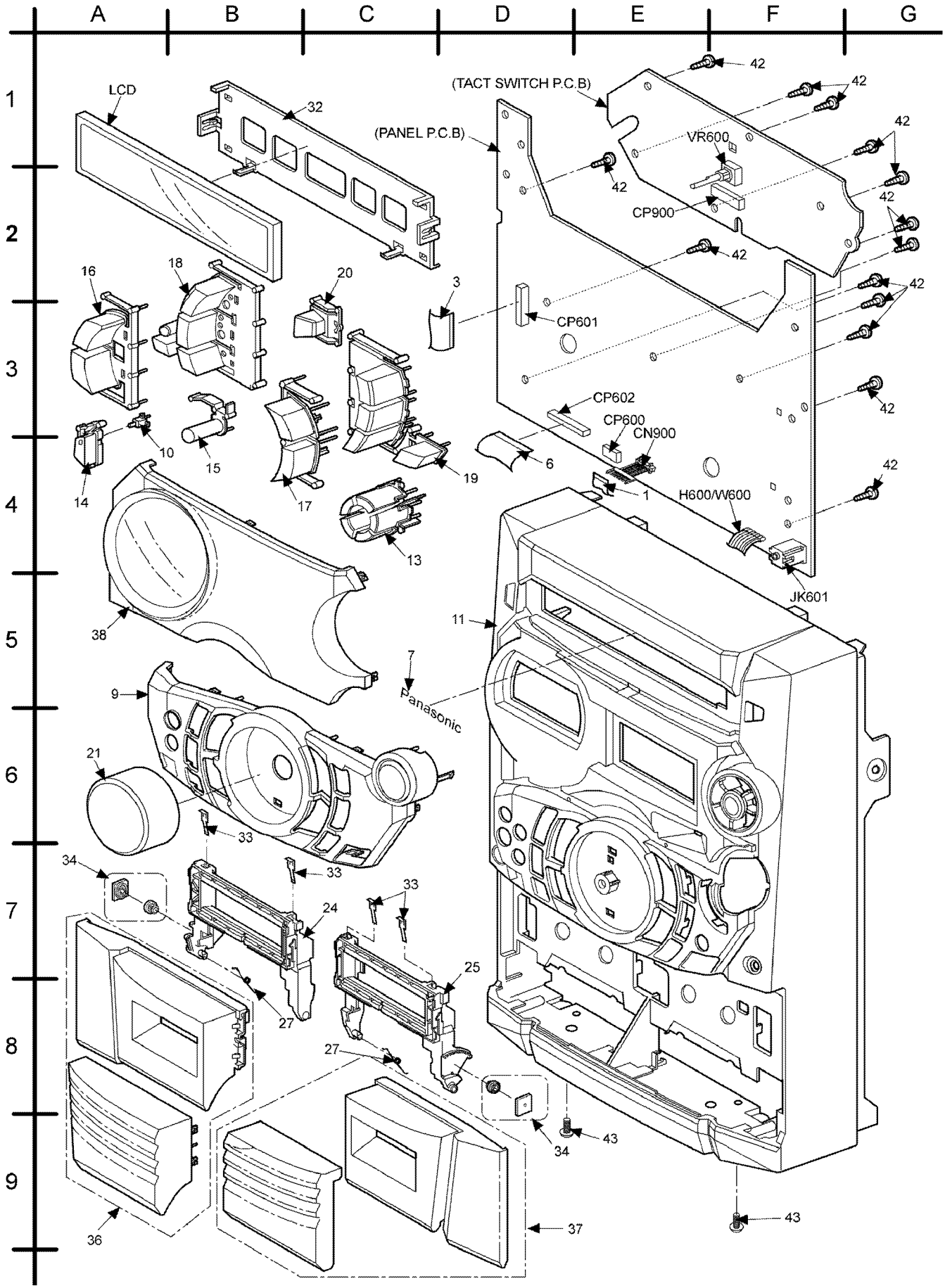

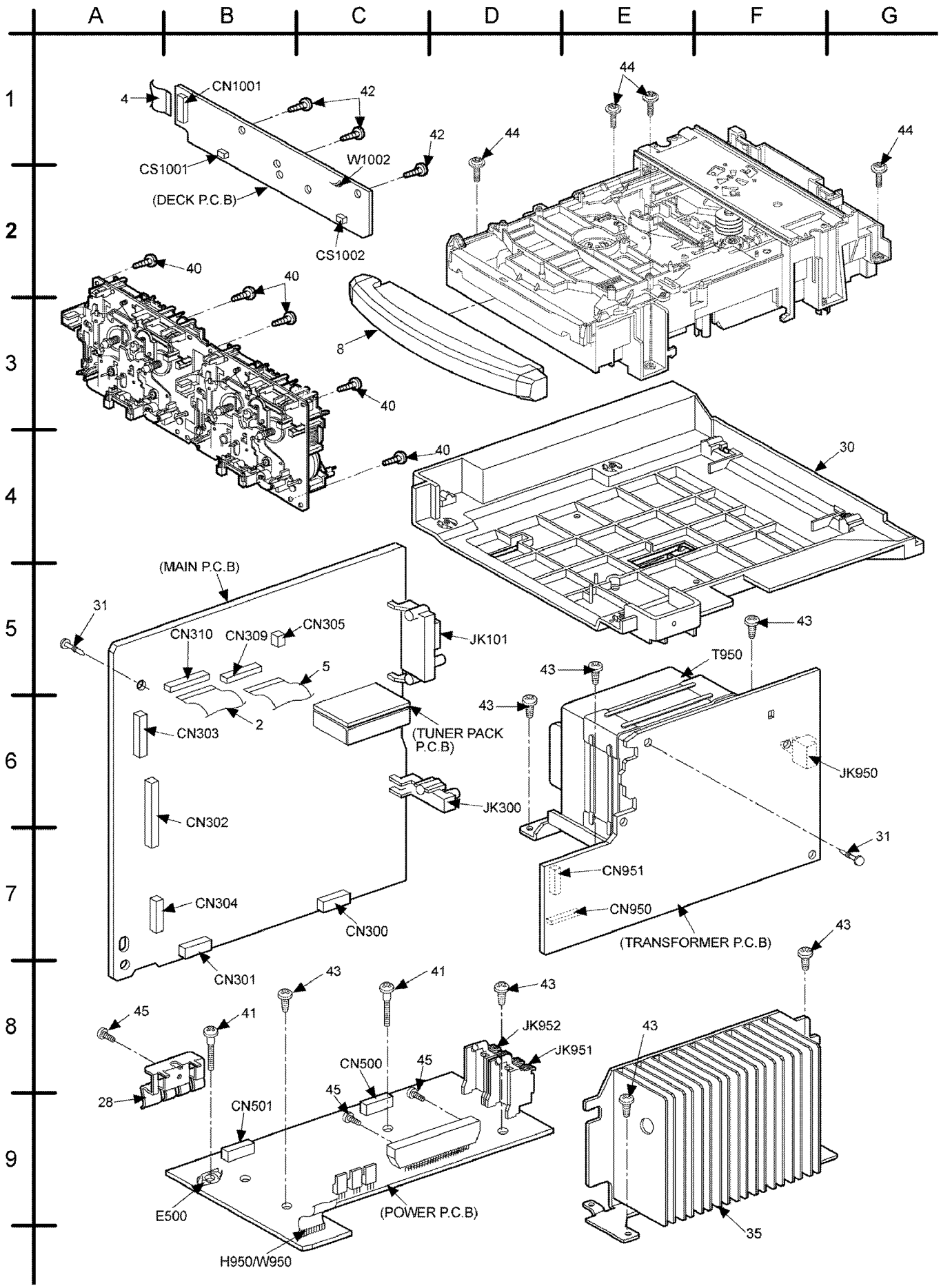
A
B
C
D
E
F
G
1
2
3
4
5
6
7
8
9
CN1001
4
42
42
CS1001
W1002
(DECK P.C.B)
CS1002
44
44
44
40
40
40
40
8
30
(MAIN P.C.B)
31
CN310
CN309
CN305
JK101
5
2
CN303
(TUNER PACK P.C.B)
CN302
JK300
CN304
CN300
CN301
43
T950
43
43
JK950
31
CN951
CN950
(TRANSFORMER P.C.B)
43
43
41
43
45
41
JK952
JK951
43
CN500
45
45
28
CN501
E500
(POWER P.C.B)
H950/W950
35

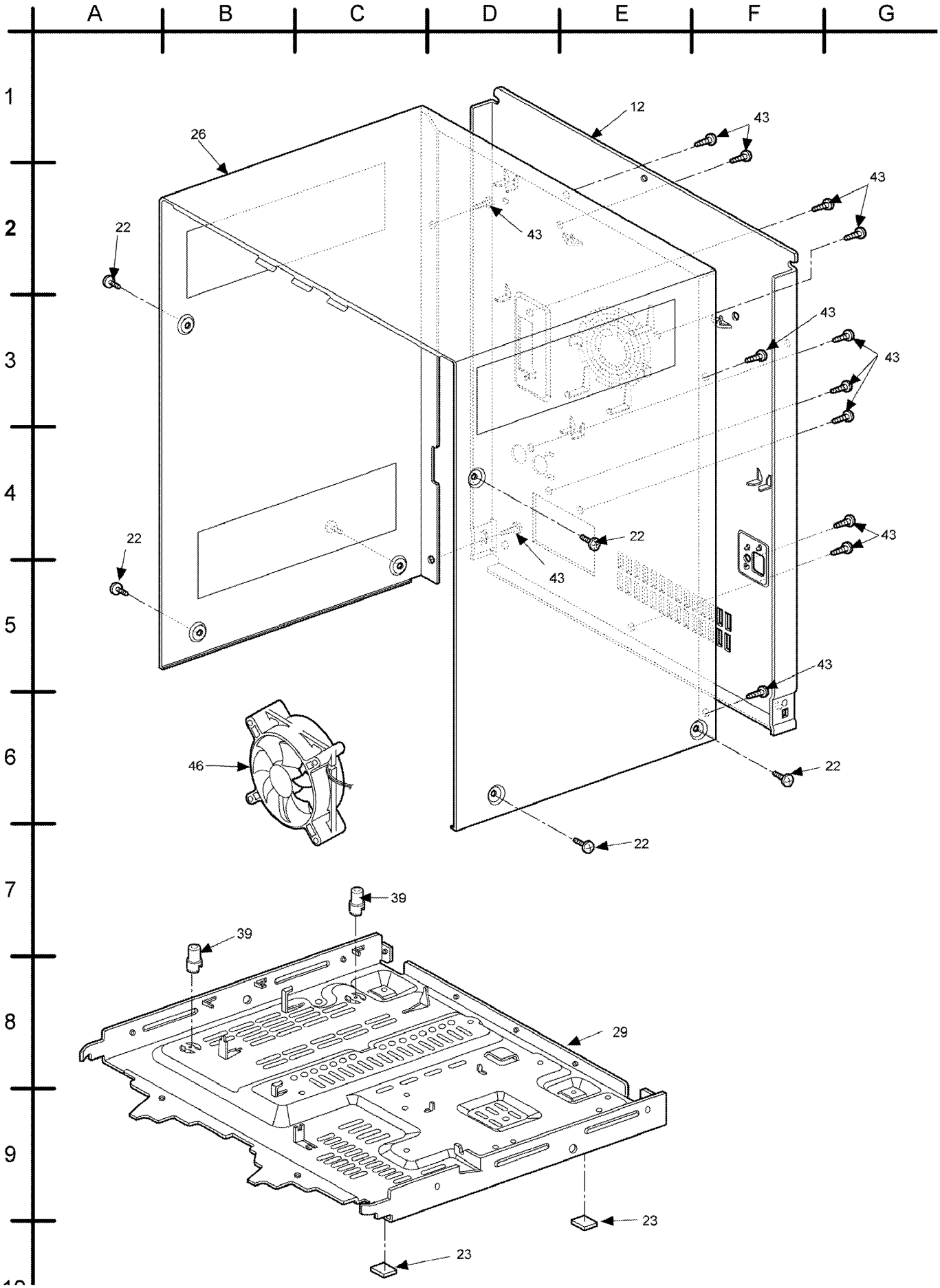
A
B
C
D
E
F
G
1
2
3
4
5
6
7
8
9
12
26
22
43
46
39
29
23

23.3.2. Cabinet Parts List

Ref. No.	Part No.	Part Name & Description	Remarks
		CABINET AND CHASSIS	
1	REEX0202	10P FFC	[M]
2	REEX0204	19P FCC	[M]
3	REEX0210	17P FFC	[M]
4	REEX0211	14P FFC WIRE	[M]
5	REEX0212	14P FFC WIRE	[M]
6	REEX0215	30P FFC	[M]
7	RGBX0011-S	PANA BADGE	[M]
8	RGKX0241-K	CD LID	[M]K
8	RGKX0241-S	CD LID	[M]S
9	RGKX0242-K	CONTROL PANEL	[M]K
9	RGKX0242-1S	CONTROL PANEL	[M]S
10	RGLX0081-Q	POWER LIGHT CHIP	[M]
11	RGPX0141B-K	FRONT PANEL	[M]K
11	RGPX0141B-S	FRONT PANEL	[M]S
12	RGRX0031D-A	REAR PANEL	[M]E-K/S
12	RGRX0031D-B	REAR PANEL	[M]EB-S
12	RGRX0031D-C	REAR PANEL	[M]EG-K/S
13	RGUX0486-S	CD CONTROL BUTTON	[M]
14	RGUX0546A-K	POWER BUTTON	[M]K
14	RGUX0546A-S	POWER BUTTON	[M]S
15	RGUX0547-R	SS EQ BUTTON	[M]
16	RGUX0548-S	FUNCTION BUTTON L	[M]
17	RGUX0549-S	FUNCTION BUTTON R	[M]
18	RGUX0550-K	DECK CONTROL BTN L	[M]K
18	RGUX0550-1S	DECK CONTROL BTN L	[M]S
19	RGUX0551-K	DECK CONTROL BTN R	[M]K
19	RGUX0551-1S	DECK CONTROL BTN R	[M]S
20	RGUX0552-K	CD EJECT BUTTON	[M]K
20	RGUX0552-S	CD EJECT BUTTON	[M]S

Ref. No.	Part No.	Part Name & Description	Remarks
21	RGWX0070-S	VOLUME KNOB	[M]
22	RHD30004-K	SIDE SCREW	[M]K
22	RHD30004-2S	SCREW	[M]S
23	RKA0059-K	LEG RUBBER	[M]
24	RKFX0093-K	CASS. HOLDER (L)	[M]
25	RKFX0094-K	CASS. HOLDER (R)	[M]
26	RKMX0077D-K	TOP CABINET (BENT)	[M]K
26	RKMX0077D-S	TOP CABINET (BENT)	[M]S
27	RMBX0021	CASS OPEN SPRING	[M]
28	RMCX0021	TRANSISTOR CLIP	[M]
29	RMKX0064-N	BOTTOM CHASSIS	[M]
30	RMKX0088	CD CHASSIS	[M]
31	RMNX0019	PCB SPACER	[M]
32	RMNX0117	FL HOLDER	[M]
33	RUS757ZAA	CASS HALF SPRING	[M]
34	RXGX0002	DAMPER GEAR	[M]
35	RXXX0039A	HEAT SINK UNIT	[M]
36	RYFX0130-K	CASS LID UNIT (L)	[M]K
36	RYFX0130-S	CASS LID UNIT (L)	[M]S
37	RYFX0131-K	CASS LID UNIT (R)	[M]K
37	RYFX0131-S	CASS LID UNIT (R)	[M]S
38	RYFX0132A-S	FL WINDOW UNIT	[M]
39	SHE187-5J	PCB SUPPORT	[M]
40	XTB3+10JFZ	SCREW	[M]
41	XTB3+20J	SCREW	[M]
42	XTBS26+10J	SCREW	[M]
43	XTBS3+8JFZ1	SCREW	[M]
44	XTW3+12T	SCREW	[M]
45	XTW3+15T	SCREW	[M]
46	REM0072-3	FAN	[M]

23.4. Electrical Parts List

Ref. No.	Part No.	Part Name & Description	Remarks
		PRINTED CIRCUIT BOARD	
	REPX0405A	CD SERVO P.C.B. (SIDE: A)	[M](RTL)
	REPX0405A	CD SERVO P.C.B. (SIDE: B)	[M](RTL)
	REPX0422H	MAIN/ TUNER P.C.B.	[M](RTL)
	REPX0423A	PANEL P.C.B.	[M](RTL)
	REPX0423A	TACT SWITCH P.C.B.	[M](RTL)
	REPX0327K	TRANSFORMER P.C.B.	[M](RTL)
	REP2578A-N	CD DETECT P.C.B.	[M](RTL)
	REP2578A-N	SPINDLE POSITION P.C.B.	[M](RTL)
	REP2578A-N	CD LOADING P.C.B.	[M](RTL)
	REPX0368G	POWER P.C.B.	[M](RTL)
	REPX0331A	DECK P.C.B.	[M](RTL)
	REPX0321A	DECK MECHANISM P.C.B.	[M](RTL)
		INTEGRATED CIRCUITS	
IC1	C0GAM0000005	IC DRIVE	[M]
IC101	LA1833NMNTLM	IC IF & MPX	[M]
IC102	LC72131MDTRM	IC PLL	[M]
IC300	C1BB00000747	IC ASP	[M]
IC301	C0AABB000117	IC OP-AMP (HP AMP)	[M]
IC303	C1BB00000715	IC RDS	[M]
IC305	C2CBJF000014	IC MICRO-P	[M]
IC501	RSN315H42B-P	IC HIC	[M]
IC602	C0HBB0000040	IC FL DRIVER	[M]
IC603	C0JBAE000192	IC XOR GATE	[M]
IC701	AN22004A-NF	IC HEAD AMP	[M]
IC702	MN6627934CH	IC LSI	[M]
IC703	AN8739SBTE2	IC 4CH DRIVER	[M]
IC704	C3ABMB000027	IC 16M DRAM	[M]
IC951	CNB13030R2AU	IC PHOTO INTERUPTOR	[M]
IC971	CNB13030R2AU	IC PHOTO INTERUPTOR	[M]
IC1001	AN7348S-E1	IC TAPE PB	[M]
IC1004	C1AA00000612	IC SW	[M]
		TRANSISTORS	

Ref. No.	Part No.	Part Name & Description	Remarks
Q1	B1GACFGG0004	TRANSISTOR	[M]
Q101	2SC2058SPTA	TRANSISTOR	[M]
Q102	2SC2058SPTA	TRANSISTOR	[M]
Q106	B1GCCFJJ0015	TRANSISTOR	[M]
Q110	2SC3311ARA	TRANSISTOR	[M]
Q201	KTC3875GRTA	TRANSISTOR	[M]
Q202	KTD1304TA	TRANSISTOR	[M]
Q203	KTD1304TA	TRANSISTOR	[M]
Q204	KTC3875GRTA	TRANSISTOR	[M]
Q205	KTC3875GRTA	TRANSISTOR	[M]
Q207	KTD1304TA	TRANSISTOR	[M]
Q209	KTC3875GRTA	TRANSISTOR	[M]
Q301	B1GDCFJJ0023	TRANSISTOR	[M]
Q302	B1ABCF000131	TRANSISTOR	[M]
Q303	KTC3875GRTA	TRANSISTOR	[M]
Q308	KTA12710YTA	TRANSISTOR	[M]
Q309	KTC3199GRTA	TRANSISTOR	[M]
Q310	B1GCCFGA0005	TRANSISTOR	[M]
Q312	B1GBCFJJ0039	TRANSISTOR	[M]
Q313	KTC3875GRTA	TRANSISTOR	[M]
Q314	KTC3875GRTA	TRANSISTOR	[M]
Q315	KRC103MTA	TRANSISTOR	[M]
Q316	KTA1267GRTA	TRANSISTOR	[M]
Q317	KTA1267GRTA	TRANSISTOR	[M]
Q318	B1GBCFJJ0039	TRANSISTOR	[M]
Q319	B1GBCFJJ0039	TRANSISTOR	[M]
Q320	B1GBCFJJ0039	TRANSISTOR	[M]
Q321	B1GDCFJJ0023	TRANSISTOR	[M]
Q322	B1GBCFJJ0039	TRANSISTOR	[M]
Q323	B1GBCFJJ0039	TRANSISTOR	[M]
Q324	KTA12710YTA	TRANSISTOR	[M]
Q325	B1GDCFJJ0023	TRANSISTOR	[M]
Q326	KTA12710YTA	TRANSISTOR	[M]
Q327	B1GBCFJJ0039	TRANSISTOR	[M]
Q328	B1GDCFJJ0023	TRANSISTOR	[M]
Q370	B1ADCF000001	TRANSISTOR	[M]

Ref. No.	Part No.	Part Name & Description	Remarks
Q371	2SD0592ARA	TRANSISTOR	[M]
Q372	B1ADCF000001	TRANSISTOR	[M]
Q373	2SD0592ARA	TRANSISTOR	[M]
Q374	B1ADCF000001	TRANSISTOR	[M]
Q375	B1ABCF000011	TRANSISTOR	[M]
Q401	KTC3875GRTA	TRANSISTOR	[M]
Q402	KTD1304TA	TRANSISTOR	[M]
Q403	KTD1304TA	TRANSISTOR	[M]
Q404	KTC3875GRTA	TRANSISTOR	[M]
Q405	KTC3875GRTA	TRANSISTOR	[M]
Q407	KTD1304TA	TRANSISTOR	[M]
Q409	KTC3875GRTA	TRANSISTOR	[M]
Q501	KTC2026	TRANSISTOR	[M]
Q502	KTA1046	TRANSISTOR	[M]
Q503	KTC2026	TRANSISTOR	[M]
Q504	KTA1046	TRANSISTOR	[M]
Q505	KTA1267GRTA	TRANSISTOR	[M]
Q506	B1GCCFGA0005	TRANSISTOR	[M]
Q507	KTC3199GRTA	TRANSISTOR	[M]
Q508	B1AAKD000009	TRANSISTOR	[M]
Q512	B1AAGC000007	TRANSISTOR	[M]
Q513	B1AAGC000007	TRANSISTOR	[M]
Q514	B1AAGC000007	TRANSISTOR	[M]
Q610	KTC3199GRTA	TRANSISTOR	[M]
Q611	KTC3199GRTA	TRANSISTOR	[M]
Q612	KTC3199GRTA	TRANSISTOR	[M]
Q614	B1GACFGG0004	TRANSISTOR	[M]
Q615	KTA12710YTA	TRANSISTOR	[M]
Q616	KTC3199GRTA	TRANSISTOR	[M]
Q617	KTA12710YTA	TRANSISTOR	[M]
Q618	KRC103MTA	TRANSISTOR	[M]
Q619	KRC103MTA	TRANSISTOR	[M]
Q621	KTC3199GRTA	TRANSISTOR	[M]
Q626	KTC3199GRTA	TRANSISTOR	[M]
Q636	KTC3199GRTA	TRANSISTOR	[M]
Q661	KTC3199GRTA	TRANSISTOR	[M]
Q662	KTC3199GRTA	TRANSISTOR	[M]
Q663	KTC3199GRTA	TRANSISTOR	[M]
Q701	B1ADCF000001	TRANSISTOR	[M]
Q950	KTC3205YTA	TRANSISTOR	[M]
Q951	2SB621ARSTA	TRANSISTOR	[M]
Q952	KRC102MTA	TRANSISTOR	[M]
Q953	B1AAGC000007	TRANSISTOR	[M]
Q1001	KTC3875GRTA	TRANSISTOR	[M]
Q1003	B1AAGC000007	TRANSISTOR	[M]
Q1004	B1AAGC000007	TRANSISTOR	[M]
Q1005	B1AAGC000007	TRANSISTOR	[M]
Q1007	KTC3875GRTA	TRANSISTOR	[M]
Q1012	KTD1304TA	TRANSISTOR	[M]
Q1013	KTD1304TA	TRANSISTOR	[M]
Q1014	B1ABCF000011	TRANSISTOR	[M]
Q1015	B1ABCF000011	TRANSISTOR	[M]
Q1016	B1GDCFJJ0023	TRANSISTOR	[M]
Q1017	KTD1146YTA	TRANSISTOR	[M]
Q1020	KTD1304TA	TRANSISTOR	[M]
Q1021	KTD1304TA	TRANSISTOR	[M]
		DIODES	
D1	GP1S94	PHOTO INTERRUPTOR	[M]
D2	B0BA4R600003	DIODE	[M]
D101	B0BC5R000009	DIODE	[M]
D201	MA2J72800L	DIODE	[M]
D204	B0ADCC000002	DIODE	[M]
D205	MA2J72800L	DIODE	[M]
D301	B0BC7R500001	DIODE	[M]
D302	B0ACCK000005	DIODE	[M]
D303	B0ADCJ000020	DIODE	[M]
D304	B0ADCJ000020	DIODE	[M]
D305	B0ADCJ000020	DIODE	[M]
D306	B0EAKM000117	DIODE	[M]
D307	B0ACCK000005	DIODE	[M]
D308	B0ACCK000005	DIODE	[M]
D309	B0EAKM000117	DIODE	[M]

Ref. No.	Part No.	Part Name & Description	Remarks
D310	B0ACCK000005	DIODE	[M]
D312	B0ACCE000003	DIODE	[M]
D313	B0ACCE000003	DIODE	[M]
D314	MA2J72900L	DIODE	[M]
D324	B0ACCK000005	DIODE	[M]
D370	B0ACCK000005	DIODE	[M]
D371	B0BC01000014	DIODE	[M]
D374	B0EAKM000117	DIODE	[M]
D375	B0ACCK000005	DIODE	[M]
D376	B0ACCK000005	DIODE	[M]
D377	B0ACCK000005	DIODE	[M]
D401	MA2J72800L	DIODE	[M]
D404	B0ADCC000002	DIODE	[M]
D405	MA2J72800L	DIODE	[M]
D501	B0BA9R600002	DIODE	[M]
D502	B0BA01500003	DIODE	[M]
D503	B0BA01400041	DIODE	[M]
D504	B0AACK000004	DIODE	[M]
D505	1T3T	DIODE	[M]
D506	1T3T	DIODE	[M]
D507	1T3T	DIODE	[M]
D508	B0BA5R600016	DIODE	[M]
D509	B0BA9R600002	DIODE	[M]
D513	B0AACK000004	DIODE	[M]
D514	B0AACK000004	DIODE	[M]
D600	SLI325URCT31	DIODE	[M]
D613	B0BA7R200003	DIODE	[M]
D620	B0AACK000004	DIODE	[M]
D929	SLI325URCT31	DIODE	[M]
D950	B0EAMM000038	DIODE	[M]
D951	B0EAMM000038	DIODE	[M]
D951	MA2C16500E	DIODE	[M]
D952	B0EAMM000038	DIODE	[M]
D953	B0EAMM000038	DIODE	[M]
D954	1T3T	DIODE	[M]
D955	1T3T	DIODE	[M]
D956	1T3T	DIODE	[M]
D957	1T3T	DIODE	[M]
D958	1T3T	DIODE	[M]
D959	1T3T	DIODE	[M]
D960	MTZJ39CTA	DIODE	[M]
D961	B0EAKM000122	DIODE	[M]
D962	B0EAKM000122	DIODE	[M]
D963	B0EAKM000122	DIODE	[M]
D964	B0BA6R600008	DIODE	[M]
D965	B0EAKM000122	DIODE	[M]
D966	B0EAKM000122	DIODE	[M]
D967	B0EAKM000122	DIODE	[M]
D968	B0EAKM000122	DIODE	[M]
D971	MA2C16500E	DIODE	[M]
D1003	B0ACCK000005	DIODE	[M]
D1004	B0BC3R700004	DIODE	[M]
		VARIABLE RESISTORS	
VR600	EVEKE2F3524M	VOLUME JOG	[M]
		SWITCHES	
S601	EVQ21405R	SW OPEN/CLOSE	[M]
S602	EVQ21405R	SW CD 1	[M]
S603	EVQ21405R	SW CD 2	[M]
S604	EVQ21405R	SW CD 3	[M]
S605	EVQ21405R	SW CD 4	[M]
S606	EVQ21405R	SW CD 5	[M]
S612	EVQ21405R	SW POWER	[M]
S613	EVQ21405R	SW SS EQ	[M]
S614	EVQ21405R	SW PRESET	[M]
S615	EVQ21405R	SW REC	[M]
S616	EVQ21405R	SW DECK 1/2	[M]
S701	RSH1A043-U	SW REST	[M]
S901	EVQ21405R	SW REW	[M]
S902	EVQ21405R	SW TUNER	[M]
S903	EVQ21405R	SW CD	[M]

Ref. No.	Part No.	Part Name & Description	Remarks
S904	EVQ21405R	SW FF	[M]
S905	EVQ21405R	SW STOP	[M]
S906	EVQ21405R	SW DECK 2	[M]
S907	EVQ21405R	SW TAPE	[M]
S908	EVQ21405R	SW AUX	[M]
S909	EVQ21405R	SW DECK 1	[M]
S910	EVQ21405R	SW DISPLAY	[M]
S951	RSH1A018-3U	SW MODE	[M]
S952	RSH1A019-2U	SW LEAF	[M]
S971	RSH1A018-3U	SW MODE	[M]
S972	RSH1A019-2U	SW LEAF	[M]
S975	RSH1A019-2U	SW LEAF	[M]
		SWITCHES	
SW1	RSH1A032-U	SW PUSH	[M]
SW2	RSH1A032-U	SW PUSH	[M]
SW3	RSH1A005-1U	SW OPEN	[M]
SW4	RSH1A91ZA-A	SW CD	[M]
SW5	K0L1BB000005	SW LOCK	[M]
		CONNECTORS	
CN1	K1MN14A00049	14P FFC CONNECTOR	[M]
CN300	K1KB12B00036	12P CONNECTOR	[M]
CN301	K1KB12B00036	12P CONNECTOR	[M]
CN302	K1MN30A00046	30P FFC CONNECTOR	[M]
CN303	RJS1A9417	FFC CONNECTOR	[M]
CN304	RJS1A9414-1	14P CONNECTOR	[M]
CN305	K1KA02A00008	CONNECTOR	[M]
CN309	RJS1A9414-1	14P CONNECTOR	[M]
CN310	K1MN19A00026	FFC CONNECTOR	[M]
CN500	K1KA12A00184	12P CONNECTOR	[M]
CN501	K1KA12A00184	12P CONNECTOR	[M]
CN701	RJS2A8616	16P FPC CONNECTOR	[M]
CN702	RJS1A6719-1Q	19P FFC CONNECTOR	[M]
CN900	RJT071K11	CONNECTOR	[M]
CN950	RJT119W09V	9P CONNECTOR	[M]
CN951	K1KA09A00047	9P CONNECTOR	[M]
CN971	K1MN10B00104	10P FFC CONNECTOR	[M]
CN1001	K1MN14B00058	14P CONNECTOR	[M]
CP600	K1MN10B00104	10P FFC CONNECTOR	[M]
CP601	RJS1A9417	FFC CONNECTOR	[M]
CP602	K1MN30A00046	30P FFC CONNECTOR	[M]
CP900	RJU071H11M	CONNECTOR	[M]
CS1001	RJS1A6805-J	5P CONNECTOR	[M]
CS1002	RJS1A6805-J	5P CONNECTOR	[M]
		CHIP RESISTOR	
W480	ERJ3GEY0R00V	0 1/16W	[M]
W481	ERJ3GEY0R00V	0 1/16W	[M]
W482	ERJ3GEY0R00V	0 1/16W	[M]
W483	ERJ3GEY0R00V	0 1/16W	[M]
W484	ERJ3GEY0R00V	0 1/16W	[M]
W485	ERJ3GEY0R00V	0 1/16W	[M]
W486	ERJ3GEY0R00V	0 1/16W	[M]
W611	ERDS2TJ680T	68 1/4W	[M]
		COILS & TRANSFORMERS	
L201	G0AR76Y00001	CHOKE COIL	[M]
L202	G0AR76Y00001	CHOKE COIL	[M]
L301	G0C101JA0030	INDUCTOR	[M]
L302	G0C101JA0030	INDUCTOR	[M]
L303	G0C101JA0030	INDUCTOR	[M]
L304	RLQB3R3KT-1Y	COIL	[M]
L305	J0JBC0000019	CHIP INDUCTOR	[M]
L401	G0AR76Y00001	CHOKE COIL	[M]
L402	G0AR76Y00001	CHOKE COIL	[M]
L601	RLQB101KT-1Y	COIL	[M]
L602	RLQZP101KT-Y	AXIAL COIL	[M]

Ref. No.	Part No.	Part Name & Description	Remarks
L603	RLQZP101KT-Y	AXIAL COIL	[M]
L609	RLQZP100KT-Y	AXIAL COIL	[M]
L610	RLQB100KT-1Y	COIL	[M]
L950	RLQZ371	LINE FILTER	[M] ⚠
L1001	G0C470JA0030	RF CHOKE COIL	[M]
L1002	7L1A62N	BIAS OSC COIL	[M]
T950	ETP76VST62HA	TRANSFORMER	[M] ⚠
T951	RTP1H3E002	BACK UP TRANSFORMER	[M] ⚠
		COMPONENT COMBINATION	
Z101	RLA2Z007-T	COIL	[M]
Z102	G2BAE0000003	AM IF BLOCK	[M]
Z120	ENV17290G1Y	FM TUNER PACK	[M]
Z600	B3RAB0000025	REMOTE SENSOR	[M]
Z950	ERZV10V511CS	ZENER	[M] ⚠
Z971	RGSD12A1445T	RADA RESISTOR	[M]
		CERAMIC FILTERS	
CF201	RLFFETNGD01L	CERAMIC FILTER	[M]
CF202	RLFFETNGD01L	CERAMIC FILTER	[M]
		RELAY	
RL950	RSY0040M-0	PRIMARY RELAY	[M] ⚠
		OSCILLATORS	
X102	RLFDFT22DD	DISCRIMINATOR	[M]
X103	RSXC7M20S05T	CRYSTAL OSCILLATOR	[M]
X301	H0A327200073	CRYSTAL OSCILLATOR	[M]
X302	H0H433400001	CRYSTAL OSCILLATOR	[M]
X303	H2A100500006	RESONATOR	[M]
X701	RSXB16M9J02T	CRYSTAL OSCILLATOR	[M]
		DISPLAY TUBE	
FL600	A2BD00000081	FL	[M]
		FUSES	
F1	K5D162BK0005	1.6A FUSE	[M] ⚠
		FUSE HOLDERS	
FC1	EYF52BC	FUSE HOLDER	[M]
FC2	EYF52BC	FUSE HOLDER	[M]
		FUSE PROTECTOR	
FP533	K5G400A00001	FUSABLE RESISTOR	[M] ⚠
FP950	K5G402AA0002	FUSE PROTECTOR	[M] ⚠
FP951	K5G102AA0002	FUSE PROTECTOR	[M] ⚠
		HOLDERS	
H600	K1YZ09000002	WIRE HOLDER	[M]
H950	RJS1A5509	9P CABLE HOLDER	[M]
		JACKS	
JK101	RJH8304N	JK ANTENNA	[M]
JK300	RJH2213N-2	JK 2P RCA	[M]
JK601	K2HC103A0023	JK SMALL SIGN	[M]
JK950	K2AA2B000004	JK AC INLET	[M] ⚠
JK951	K4BC04B00050	JK TERMINAL SPEAKER	[M]
JK952	K4BC04B00046	JK SPEAKER	[M]
		EARTH TERMINAL	
E500	SNE1004-2	EARTH TERMINAL	[M]
E501	RSQX0001-1	EARTH PLATE	[M]

Ref. No.	Part No.	Part Name & Description	Remarks
		WIRES	
W1	REZ1023-1	4P WIRE	[M]
W2	REZ1024	3P WIRE	[M]
W600	REXX0324	9P FLAT WIRE	[M]
W950	REXX0325	9P FLAT WIRE	[M]
W1002	RWJ0102050CK	MAIN-M/MOTOR WIRE	[M]
		RESISTORS	
R1	ERDS2TJ102T	1K 1/4W	[M]
R102	ERJ3GEYJ472V	4.7K 1/16W	[M]
R103	D0GB101JA002	100 1/16W	[M]
R104	ERJ3GEYJ103V	10K 1/16W	[M]
R105	ERJ3GEYJ471V	470 1/16W	[M]
R106	ERJ3GEYJ474V	470K 1/16W	[M]
R107	ERJ3GEYJ331V	330 1/16W	[M]
R108	ERJ3GEYJ474V	470K 1/16W	[M]
R109	ERJ3GEYJ331V	330 1/16W	[M]
R110	ERJ3GEYJ102V	1K 1/16W	[M]
R111	ERJ3GEYJ391V	390 1/16W	[M]
R112	ERJ3GEYJ104V	100K 1/16W	[M]
R113	ERJ3GEYJ103V	10K 1/16W	[M]
R114	D0GB562JA002	5.6K 1/16W	[M]
R115	ERJ3GEYJ561V	560 1/16W	[M]
R116	ERJ3GEYJ102V	1K 1/16W	[M]
R117	D0GB683JA002	68K 1/16W	[M]
R118	D0GB332JA002	3.3K 1/16W	[M]
R119	ERJ3GEYJ123V	12K 1/16W	[M]
R120	ERJ3GEYJ473V	47K 1/16W	[M]
R121	ERJ3GEYJ223V	22K 1/16W	[M]
R122	D0GB272JA002	2.7K 1/16W	[M]
R123	D0GB683JA002	68K 1/16W	[M]
R124	ERJ3GEYJ330V	33 1/16W	[M]
R125	ERJ3GEYJ471V	470 1/16W	[M]
R126	ERJ3GEYJ102V	1K 1/16W	[M]
R127	ERJ3GEYJ471V	470 1/16W	[M]
R128	D0GB820JA019	82 1/16W	[M]
R129	D0GB273JA002	27K 1/16W	[M]
R130	ERJ3GEYJ103V	10K 1/16W	[M]
R131	D0GB121JA002	120 1/16W	[M]
R132	ERJ3GEYJ103V	10K 1/16W	[M]
R133	ERJ3GEYJ102V	1K 1/16W	[M]
R134	ERJ3GEYJ471V	470 1/16W	[M]
R135	ERJ3GEYJ102V	1K 1/16W	[M]
R136	ERJ3GEYJ102V	1K 1/16W	[M]
R137	ERJ3GEYJ102V	1K 1/16W	[M]
R138	D0GB332JA002	3.3K 1/16W	[M]
R139	ERJ3GEYJ223V	22K 1/16W	[M]
R140	ERJ3GEYJ223V	22K 1/16W	[M]
R141	ERJ3GEYJ682V	6.8K 1/16W	[M]
R142	ERJ3GEYJ682V	6.8K 1/16W	[M]
R143	ERJ3GEYJ223V	22K 1/16W	[M]
R144	D0GB121JA002	120 1/16W	[M]
R145	ERJ3GEYJ104V	100K 1/16W	[M]
R146	ERJ3GEYJ104V	100K 1/16W	[M]
R151	D0GB820JA019	82 1/16W	[M]
R152	ERJ3GEY0R00V	0 1/16W	[M]
R201	ERJ3GEYJ103V	10K 1/16W	[M]
R202	D0GB332JA002	3.3K 1/16W	[M]
R203	D0GB1R0JA002	1 1/16W	[M]
R204	ERJ3GEYJ330V	33 1/16W	[M]
R205	ERJ3GEYJ330V	33 1/16W	[M]
R206	ERJ3GEYJ330V	33 1/16W	[M]
R207	ERJ3GEYJ330V	33 1/16W	[M]
R208	D0GB332JA002	3.3K 1/16W	[M]
R209	ERJ3GEYJ561V	560 1/16W	[M]
R210	D0GB820JA019	82 1/16W	[M]
R211	D0GB562JA002	5.6K 1/16W	[M]
R212	ERJ3GEYJ102V	1K 1/16W	[M]
R213	ERJ3GEYJ473V	47K 1/16W	[M]
R214	ERJ3GEYJ102V	1K 1/16W	[M]
R215	ERJ3GEYJ473V	47K 1/16W	[M]

Ref. No.	Part No.	Part Name & Description	Remarks
R216	ERJ3GEYJ104V	100K 1/16W	[M]
R217	ERJ3GEYJ123V	12K 1/16W	[M]
R219	D0GB152JA002	1.5K 1/16W	[M]
R220	D0GB302JA008	3K 1/16W	[M]
R221	D0GB563JA002	56K 1/16W	[M]
R222	ERJ3GEYJ681V	680 1/16W	[M]
R223	D0GB272JA002	2.7K 1/16W	[M]
R224	ERJ3GEYJ472V	4.7K 1/16W	[M]
R225	ERJ3GEYJ473V	47K 1/16W	[M]
R226	D0GB332JA002	3.3K 1/16W	[M]
R227	D0GB563JA002	56K 1/16W	[M]
R228	ERJ3GEYJ222V	2.2K 1/16W	[M]
R229	ERJ3GEYJ123V	12K 1/16W	[M]
R230	ERJ3GEYJ102V	1K 1/16W	[M]
R231	ERJ3GEYJ104V	100K 1/16W	[M]
R232	ERJ3GEYJ222V	2.2K 1/16W	[M]
R233	ERJ3GEYJ472V	4.7K 1/16W	[M]
R234	ERJ3GEYJ104V	100K 1/16W	[M]
R235	D0GB152JA002	1.5K 1/16W	[M]
R236	D0GB183JA002	18K 1/16W	[M]
R237	D0GB183JA002	18K 1/16W	[M]
R238	ERJ3GEYJ224V	220K 1/16W	[M]
R239	ERJ3GEYJ472V	4.7K 1/16W	[M]
R240	ERJ3GEYJ472V	4.7K 1/16W	[M]
R241	ERJ3GEYJ123V	12K 1/16W	[M]
R242	D0GB562JA002	5.6K 1/16W	[M]
R243	D0GB302JA008	3K 1/16W	[M]
R244	D0GB122JA019	1.2K 1/16W	[M]
R245	ERDS2TJ332T	3.3K 1/4W	[M]
R245	ERJ3GEYJ221V	220 1/16W	[M]
R246	ERDS2TJ153T	15K 1/4W	[M]
R247	ERDS2TJ332T	3.3K 1/4W	[M]
R248	D0GB4R7JA008	4.7 1/16W	[M]
R248	ERDS2TJ153T	15K 1/4W	[M]
R249	ERDS2TJ683T	68K 1/4W	[M]
R250	ERDS2TJ683T	68K 1/4W	[M]
R251	ERDS2TJ154T	150K 1/4W	[M]
R252	ERDS2TJ104T	100K 1/4W	[M]
R252	ERJ3GEYJ104V	100K 1/16W	[M]
R253	ERDS2TJ100T	10 1/4W	[M]
R253	ERJ3GEYJ102V	1K 1/16W	[M]
R254	ERDS2TJ100T	10 1/4W	[M]
R255	ERDS1FVJ100T	10 1/2W	[M]
R255	ERJ3GEYJ104V	100K 1/16W	[M]
R256	D0GB152JA002	1.5K 1/16W	[M]
R256	ERDS1FVJ100T	10 1/2W	[M]
R268	ERJ3GEYJ102V	1K 1/16W	[M]
R269	ERJ3GEYJ823V	82K 1/16W	[M]
R271	ERJ3GEYJ334V	330K 1/16W	[M]
R272	D0GB272JA002	2.7K 1/16W	[M]
R275	D0GB101JA002	100 1/16W	[M]
R276	D0GB333JA002	33K 1/16W	[M]
R279	ERJ3GEYJ822V	8.2K 1/16W	[M]
R301	ERJ3GEYJ472V	4.7K 1/16W	[M]
R302	ERJ3GEYJ103V	10K 1/16W	[M]
R303	ERDS1FVJ270T	27 1/2W	[M]
R305	ERJ3GEYJ682V	6.8K 1/16W	[M]
R307	D0GB122JA019	1.2K 1/16W	[M]
R308	D0GB122JA019	1.2K 1/16W	[M]
R309	D0GB273JA002	27K 1/16W	[M]
R310	D0GB563JA002	56K 1/16W	[M]
R312	ERJ3GEYJ104V	100K 1/16W	[M]
R313	ERJ3GEYJ472V	4.7K 1/16W	[M]
R314	ERJ3GEYJ472V	4.7K 1/16W	[M]
R315	ERJ3GEYJ822V	8.2K 1/16W	[M]
R318	D0GB332JA002	3.3K 1/16W	[M]
R320	ERJ3GEY0R00V	0 1/16W	[M]
R323	ERDS1FVJ150T	15 1/2W	[M]
R324	ERD2FCVG120T	12 1/4W	[M]
R325	ERJ3GEYJ103V	10K 1/16W	[M]
R326	D0GB101JA002	100 1/16W	[M]
R327	ERJ3GEYJ102V	1K 1/16W	[M]
R328	ERJ3GEYJ222V	2.2K 1/16W	[M]
R329	ERJ3GEYJ331V	330 1/16W	[M]

Ref. No.	Part No.	Part Name & Description	Remarks
R332	D0GB101JA002	100 1/16W	[M]
R337	ERJ3GEYJ102V	1K 1/16W	[M]
R338	ERJ3GEYJ102V	1K 1/16W	[M]
R339	ERJ3GEYJ102V	1K 1/16W	[M]
R340	ERJ3GEYJ103V	10K 1/16W	[M]
R341	ERJ3GEYJ102V	1K 1/16W	[M]
R342	ERJ3GEYJ102V	1K 1/16W	[M]
R343	ERJ3GEYJ103V	10K 1/16W	[M]
R344	ERJ3GEYJ223V	22K 1/16W	[M]
R345	ERJ3GEYJ123V	12K 1/16W	[M]
R346	ERJ3GEYJ223V	22K 1/16W	[M]
R347	ERJ3GEYJ123V	12K 1/16W	[M]
R348	ERJ3GEYJ221V	220 1/16W	[M]
R349	ERJ3GEYJ102V	1K 1/16W	[M]
R350	ERJ3GEYJ103V	10K 1/16W	[M]
R351	ERJ3GEYJ221V	220 1/16W	[M]
R352	ERJ3GEYJ102V	1K 1/16W	[M]
R353	ERJ3GEYJ822V	8.2K 1/16W	[M]
R354	D0GB101JA002	100 1/16W	[M]
R355	ERJ3GEYJ103V	10K 1/16W	[M]
R356	ERJ3GEYJ103V	10K 1/16W	[M]
R358	ERJ3GEYJ103V	10K 1/16W	[M]
R359	ERJ3GEYJ472V	4.7K 1/16W	[M]
R360	ERJ3GEYJ472V	4.7K 1/16W	[M]
R361	ERJ3GEYJ102V	1K 1/16W	[M]
R362	ERJ3GEYJ102V	1K 1/16W	[M]
R363	ERJ3GEYJ102V	1K 1/16W	[M]
R364	ERJ3GEYJ102V	1K 1/16W	[M]
R365	ERJ3GEYJ102V	1K 1/16W	[M]
R366	ERJ3GEYJ102V	1K 1/16W	[M]
R367	ERJ3GEYJ103V	10K 1/16W	[M]
R368	ERJ3GEYJ103V	10K 1/16W	[M]
R369	ERJ3GEYJ103V	10K 1/16W	[M]
R370	ERJ3GEYJ104V	100K 1/16W	[M]
R371	ERJ3GEYJ472V	4.7K 1/16W	[M]
R372	ERJ3GEYJ472V	4.7K 1/16W	[M]
R373	D0GB332JA002	3.3K 1/16W	[M]
R374	ERJ3GEYJ104V	100K 1/16W	[M]
R375	ERJ3GEYJ103V	10K 1/16W	[M]
R376	ERDS1FVJ220T	22 1/2W	[M]
R377	ERJ3GEYJ224V	220K 1/16W	[M]
R378	D0GB101JA002	100 1/16W	[M]
R379	ERJ3GEYJ104V	100K 1/16W	[M]
R380	ERJ3GEYJ103V	10K 1/16W	[M]
R381	ERJ3GEYJ225V	2.2M 1/16W	[M]
R382	ERJ3GEYJ103V	10K 1/16W	[M]
R383	ERJ3GEYJ103V	10K 1/16W	[M]
R384	ERJ3GEYJ103V	10K 1/16W	[M]
R385	ERJ3GEYJ103V	10K 1/16W	[M]
R386	ERJ3GEYJ103V	10K 1/16W	[M]
R389	ERJ3GEYJ103V	10K 1/16W	[M]
R390	ERJ3GEYJ103V	10K 1/16W	[M]
R391	ERJ3GEYJ472V	4.7K 1/16W	[M]
R392	ERJ3GEYJ103V	10K 1/16W	[M]
R393	ERJ3GEYJ103V	10K 1/16W	[M]
R394	ERJ3GEYJ103V	10K 1/16W	[M]
R395	ERJ3GEYJ473V	47K 1/16W	[M]
R396	ERJ3GEYJ473V	47K 1/16W	[M]
R397	ERJ3GEYJ104V	100K 1/16W	[M]
R398	ERJ3GEYJ103V	10K 1/16W	[M]
R399	ERJ3GEYJ103V	10K 1/16W	[M]
R400	ERJ3GEYJ103V	10K 1/16W	[M]
R401	ERJ3GEYJ103V	10K 1/16W	[M]
R402	D0GB332JA002	3.3K 1/16W	[M]
R403	D0GB1R0JA002	1 1/16W	[M]
R404	ERJ3GEYJ330V	33 1/16W	[M]
R405	ERJ3GEYJ330V	33 1/16W	[M]
R406	ERJ3GEYJ330V	33 1/16W	[M]
R407	ERJ3GEYJ330V	33 1/16W	[M]
R408	D0GB332JA002	3.3K 1/16W	[M]
R409	ERJ3GEYJ561V	560 1/16W	[M]
R410	D0GB820JA019	82 1/16W	[M]
R411	D0GB562JA002	5.6K 1/16W	[M]
R412	ERJ3GEYJ102V	1K 1/16W	[M]

Ref. No.	Part No.	Part Name & Description	Remarks
R413	ERJ3GEYJ473V	47K 1/16W	[M]
R414	ERJ3GEYJ102V	1K 1/16W	[M]
R415	ERJ3GEYJ473V	47K 1/16W	[M]
R416	ERJ3GEYJ104V	100K 1/16W	[M]
R417	ERJ3GEYJ123V	12K 1/16W	[M]
R419	D0GB152JA002	1.5K 1/16W	[M]
R420	D0GB302JA008	3K 1/16W	[M]
R421	D0GB563JA002	56K 1/16W	[M]
R422	ERJ3GEYJ681V	680 1/16W	[M]
R423	D0GB272JA002	2.7K 1/16W	[M]
R424	ERJ3GEYJ472V	4.7K 1/16W	[M]
R425	ERJ3GEYJ473V	47K 1/16W	[M]
R426	D0GB332JA002	3.3K 1/16W	[M]
R427	D0GB563JA002	56K 1/16W	[M]
R428	ERJ3GEYJ222V	2.2K 1/16W	[M]
R429	ERJ3GEYJ123V	12K 1/16W	[M]
R430	ERJ3GEYJ102V	1K 1/16W	[M]
R431	ERJ3GEYJ104V	100K 1/16W	[M]
R432	ERJ3GEYJ222V	2.2K 1/16W	[M]
R433	ERJ3GEYJ472V	4.7K 1/16W	[M]
R434	ERJ3GEYJ104V	100K 1/16W	[M]
R435	D0GB152JA002	1.5K 1/16W	[M]
R436	D0GB183JA002	18K 1/16W	[M]
R437	D0GB183JA002	18K 1/16W	[M]
R438	ERJ3GEYJ224V	220K 1/16W	[M]
R439	ERJ3GEYJ472V	4.7K 1/16W	[M]
R440	ERJ3GEYJ472V	4.7K 1/16W	[M]
R441	ERJ3GEYJ123V	12K 1/16W	[M]
R442	D0GB562JA002	5.6K 1/16W	[M]
R443	D0GB302JA008	3K 1/16W	[M]
R444	D0GB122JA019	1.2K 1/16W	[M]
R445	ERDS2TJ332T	3.3K 1/4W	[M]
R445	ERJ3GEYJ221V	220 1/16W	[M]
R446	ERDS2TJ153T	15K 1/4W	[M]
R446	ERJ3GEYJ223V	22K 1/16W	[M]
R447	ERDS2TJ332T	3.3K 1/4W	[M]
R448	D0GB4R7JA008	4.7 1/16W	[M]
R448	ERDS2TJ153T	15K 1/4W	[M]
R449	ERDS2TJ683T	68K 1/4W	[M]
R450	ERDS2TJ683T	68K 1/4W	[M]
R450	ERJ3GEYJ472V	4.7K 1/16W	[M]
R451	ERDS2TJ563T	56K 1/4W	[M]
R452	ERDS2TJ224T	220K 1/4W	[M]
R452	ERJ3GEYJ104V	100K 1/16W	[M]
R453	ERDS2TJ100T	10 1/4W	[M]
R453	ERJ3GEYJ102V	1K 1/16W	[M]
R454	ERDS2TJ100T	10 1/4W	[M]
R454	ERJ3GEYJ472V	4.7K 1/16W	[M]
R455	ERDS1FVJ100T	10 1/2W	[M]
R455	ERJ3GEYJ104V	100K 1/16W	[M]
R456	D0GB152JA002	1.5K 1/16W	[M]
R456	ERDS1FVJ100T	10 1/2W	[M]
R461	ERJ3GEYJ102V	1K 1/16W	[M]
R462	ERJ3GEYJ102V	1K 1/16W	[M]
R463	D0GB101JA002	100 1/16W	[M]
R468	ERJ3GEYJ102V	1K 1/16W	[M]
R469	ERJ3GEYJ823V	82K 1/16W	[M]
R471	ERJ3GEYJ334V	330K 1/16W	[M]
R472	D0GB272JA002	2.7K 1/16W	[M]
R475	D0GB101JA002	100 1/16W	[M]
R476	D0GB333JA002	33K 1/16W	[M]
R479	ERJ3GEYJ822V	8.2K 1/16W	[M]
R501	ERDS2TJ103T	10K 1/4W	[M]
R502	ERDS2TJ223T	22K 1/4W	[M]
R503	ERDS2TJ123T	12K 1/4W	[M]
R504	ERDS2TJ473T	47K 1/4W	[M]
R505	ERDS2TJ473T	47K 1/4W	[M]
R506	ERDS2TJ104T	100K 1/4W	[M]
R507	ERDS1FVJ331T	330 1/2W	[M]
R508	ERDS1FVJ331T	330 1/2W	[M]
R509	ERDS1FVJ331T	330 1/2W	[M]
R510	ERDS2TJ272T	2.7K 1/4W	[M]
R511	ERDS2TJ561T	560 1/4W	[M]
R512	ERDS2TJ272T	2.7K 1/4W	[M]

Ref. No.	Part No.	Part Name & Description	Remarks
R513	ERDS2TJ332T	3.3K 1/4W	[M]
R514	ERDS2TJ332T	3.3K 1/4W	[M]
R515	ERDS1FVJ270T	27 1/2W	[M]
R516	ERDS1FVJ150T	15 1/2W	[M]
R517	ERDS1FVJ8R2T	8.2 1/2W	[M]
R518	ERDS1FVJ8R2T	8.2 1/2W	[M]
R519	ERDS1FVJ8R2T	8.2 1/2W	[M]
R520	ERDS1FVJ8R2T	8.2 1/2W	[M]
R521	ERDS1FVJ8R2T	8.2 1/2W	[M]
R522	ERDS2TJ332T	3.3K 1/4W	[M]
R523	ERDS2TJ471T	470 1/4W	[M]
R524	ERDS2TJ2R2T	2.2 1/4W	[M]
R525	ERDS2TJ2R2T	2.2 1/4W	[M]
R526	ERDS2TJ2R2T	2.2 1/4W	[M]
R527	ERDS2TJ2R2T	2.2 1/4W	[M]
R528	ERDS2TJ103T	10K 1/4W	[M]
R529	ERDS1FVJ331T	330 1/2W	[M]
R530	ERDS2TJ122T	1.2K 1/4W	[M]
R531	ERDS2TJ222T	2.2K 1/4W	[M]
R532	ERDS2TJ151T	150 1/4W	[M]
R553	ERDS2TJ224T	220K 1/4W	[M]
R554	ERDS2TJ103T	10K 1/4W	[M]
R555	ERDS2TJ223T	22K 1/4W	[M]
R556	ERDS2TJ103T	10K 1/4W	[M]
R557	ERDS2TJ223T	22K 1/4W	[M]
R600	ERDS2TJ472T	4.7K 1/4W	[M]
R601	ERDS2TJ102T	1K 1/4W	[M]
R602	ERDS2TJ102T	1K 1/4W	[M]
R603	ERDS2TJ122T	1.2K 1/4W	[M]
R604	ERDS2TJ182T	1.8K 1/4W	[M]
R605	ERDS2TJ222T	2.2K 1/4W	[M]
R606	ERDS2TJ272T	2.7K 1/4W	[M]
R607	ERDS2TJ472T	4.7K 1/4W	[M]
R608	ERDS2TJ682T	6.8K 1/4W	[M]
R609	ERDS2TJ103T	10K 1/4W	[M]
R610	ERDS2TJ223T	22K 1/4W	[M]
R612	ERDS2TJ102T	1K 1/4W	[M]
R613	ERDS2TJ102T	1K 1/4W	[M]
R614	ERDS2TJ122T	1.2K 1/4W	[M]
R615	ERDS2TJ182T	1.8K 1/4W	[M]
R621	ERDS2TJ124T	120K 1/4W	[M]
R625	ERDS2TJ124T	120K 1/4W	[M]
R634	ERDS2TJ103T	10K 1/4W	[M]
R635	ERDS2TJ103T	10K 1/4W	[M]
R636	ERDS2TJ124T	120K 1/4W	[M]
R650	ERDS2TJ471T	470 1/4W	[M]
R651	ERDS2TJ471T	470 1/4W	[M]
R655	ERDS2TJ221T	220 1/4W	[M]
R661	ERDS2TJ124T	120K 1/4W	[M]
R662	ERDS2TJ124T	120K 1/4W	[M]
R663	ERDS2TJ124T	120K 1/4W	[M]
R688	ERDS2TJ2R7T	2.7 1/4W	[M]
R689	ERDS2TJ223T	22K 1/4W	[M]
R691	ERDS2TJ470T	47 1/4W	[M]
R692	ERD2FCVG470T	47 1/4W	[M]
R693	ERD2FCVG470T	47 1/4W	[M]
R698	ERDS2TJ102T	1K 1/4W	[M]
R699	ERDS2TJ102T	1K 1/4W	[M]
R700	ERDS2TJ2R7T	2.7 1/4W	[M]
R701	D0GB4R7JA008	4.7 1/16W	[M]
R701	ERDS2TJ223T	22K 1/4W	[M]
R702	ERDS2TJ123T	12K 1/4W	[M]
R702	ERJ3GEYJ472V	4.7K 1/16W	[M]
R704	ERJ3GEYJ102V	1K 1/16W	[M]
R705	D0GB393JA002	39K 1/16W	[M]
R706	ERJ3GEYJ102V	1K 1/16W	[M]
R707	ERJ3GEY0R00V	0 1/16W	[M]
R708	ERJ3GEY0R00V	0 1/16W	[M]
R709	ERJ3GEYJ104V	100K 1/16W	[M]
R711	ERJ3GEYJ823V	82K 1/16W	[M]
R712	D0GB821JA002	820 1/16W	[M]
R714	ERJ3GEYJ221V	220 1/16W	[M]
R715	D0GB272JA002	2.7K 1/16W	[M]
R717	ERJ3GEYJ102V	1K 1/16W	[M]

Ref. No.	Part No.	Part Name & Description	Remarks
R718	ERJ3GEYJ102V	1K 1/16W	[M]
R720	D0GB105JA002	1M 1/16W	[M]
R721	D0GB101JA002	100 1/16W	[M]
R723	D0GB562JA002	5.6K 1/16W	[M]
R725	ERJ3GEYJ561V	560 1/16W	[M]
R727	D0GB152JA002	1.5K 1/16W	[M]
R728	D0GB183JA002	18K 1/16W	[M]
R729	D0GB152JA002	1.5K 1/16W	[M]
R731	ERJ3GEYJ223V	22K 1/16W	[M]
R735	D0GB101JA002	100 1/16W	[M]
R736	D0GB100JA002	10 1/16W	[M]
R737	ERJ3GEYJ682V	6.8K 1/16W	[M]
R738	ERJ3GEYJ682V	6.8K 1/16W	[M]
R739	ERJ3GEYJ102V	1K 1/16W	[M]
R742	ERJ3GEYJ103V	10K 1/16W	[M]
R743	ERJ3GEYJ472V	4.7K 1/16W	[M]
R744	D0GB393JA002	39K 1/16W	[M]
R749	D0GB183JA002	18K 1/16W	[M]
R750	ERJ3GEYJ5R6V	5.6 1/16W	[M]
R753	D0GB100JA002	10 1/16W	[M]
R760	D0GB101JA002	100 1/16W	[M]
R761	ERJ3GEYJ103V	10K 1/16W	[M]
R762	ERJ3GEYJ103V	10K 1/16W	[M]
R763	ERJ3GEYJ103V	10K 1/16W	[M]
R801	D0GB106JA008	10M 1/16W	[M]
R802	ERJ3GEYJ223V	22K 1/16W	[M]
R803	ERJ3GEYJ223V	22K 1/16W	[M]
R804	ERJ3GEYJ334V	330K 1/16W	[M]
R805	ERJ3GEYJ472V	4.7K 1/16W	[M]
R806	ERJ3GEYJ472V	4.7K 1/16W	[M]
R807	ERJ3GEYJ681V	680 1/16W	[M]
R808	ERJ3GEYJ473V	47K 1/16W	[M]
R809	ERJ3GEYJ473V	47K 1/16W	[M]
R810	ERJ3GEYJ472V	4.7K 1/16W	[M]
R811	ERJ3GEYJ472V	4.7K 1/16W	[M]
R812	ERJ3GEYJ472V	4.7K 1/16W	[M]
R813	ERJ3GEYJ472V	4.7K 1/16W	[M]
R814	ERJ3GEYJ472V	4.7K 1/16W	[M]
R815	ERJ3GEYJ474V	470K 1/16W	[M]
R816	ERJ3GEYJ474V	470K 1/16W	[M]
R817	ERJ3GEYJ681V	680 1/16W	[M]
R818	ERJ3GEYJ222V	2.2K 1/16W	[M]
R819	ERJ3GEYJ222V	2.2K 1/16W	[M]
R820	ERJ3GEYJ471V	470 1/16W	[M]
R884	D0GB101JA002	100 1/16W	[M]
R885	D0GB101JA002	100 1/16W	[M]
R886	D0GB101JA002	100 1/16W	[M]
R901	ERDS2TJ102T	1K 1/4W	[M]
R902	ERDS2TJ102T	1K 1/4W	[M]
R903	ERDS2TJ122T	1.2K 1/4W	[M]
R904	ERDS2TJ182T	1.8K 1/4W	[M]
R905	ERDS2TJ222T	2.2K 1/4W	[M]
R906	ERDS2TJ272T	2.7K 1/4W	[M]
R907	ERDS2TJ472T	4.7K 1/4W	[M]
R908	ERDS2TJ682T	6.8K 1/4W	[M]
R909	ERDS2TJ103T	10K 1/4W	[M]
R911	ERDS2TJ104T	100K 1/4W	[M]
R912	ERDS2TJ473T	47K 1/4W	[M]
R913	ERDS2TJ473T	47K 1/4W	[M]
R914	ERDS2TJ563T	56K 1/4W	[M]
R915	ERDS2TJ470T	47 1/4W	[M]
R916	ERDS2TJ104T	100K 1/4W	[M]
R917	ERDS2TJ563T	56K 1/4W	[M]
R918	ERDS2TJ470T	47 1/4W	[M]
R919	ERDS2TJ103T	10K 1/4W	[M]
R920	ERDS2TJ103T	10K 1/4W	[M]
R921	ERDS2TJ103T	10K 1/4W	[M]
R922	ERDS2TJ103T	10K 1/4W	[M]
R924	ERDS2TJ103T	10K 1/4W	[M]
R951	ERDS2TJ332T	3.3K 1/4W	[M]
R952	ERDS2TJ222T	2.2K 1/4W	[M]
R952	ERDS2TJ821T	820 1/4W	[M]
R953	ERDS2TJ151T	150 1/4W	[M]
R953	ERDS2TJ393T	39K 1/4W	[M]

Ref. No.	Part No.	Part Name & Description	Remarks
R954	ERDS1FVJ100T	10 1/2W	[M]
R955	ERDS1FVJ100T	10 1/2W	[M]
R956	ERDS1FVJ100T	10 1/2W	[M]
R957	ERDS2TJ103T	10K 1/4W	[M]
R958	ERDS2TJ103T	10K 1/4W	[M]
R959	ERD2FCVJ4R7T	4.7 1/4W	[M]
R960	ERDS2TJ472T	4.7K 1/4W	[M]
R961	ERDS2TJ151T	150 1/4W	[M]
R972	ERDS2TJ821T	820 1/4W	[M]
R973	ERDS2TJ393T	39K 1/4W	[M]
R975	ERDS2TJ182T	1.8K 1/4W	[M]
R976	ERDS2TJ221T	220 1/4W	[M]
R979	ERDS2TJ101T	100 1/4W	[M]
R988	ERDS2TJ103T	10K 1/4W	[M]
R989	ERDS2TJ103T	10K 1/4W	[M]
R1001	D0GB1R0JA002	1 1/16W	[M]
R1003	ERJ3GEYJ103V	10K 1/16W	[M]
R1004	D0GB152JA002	1.5K 1/16W	[M]
R1005	ERJ3GEYJ472V	4.7K 1/16W	[M]
R1006	ERJ3GEYJ102V	1K 1/16W	[M]
R1007	ERD25FVJ4R7T	4.7 1/4W	[M]
R1009	D0GB183JA002	18K 1/16W	[M]
R1010	D0GB183JA002	18K 1/16W	[M]
R1011	ERJ3GEYJ103V	10K 1/16W	[M]
R1012	ERJ3GEYJ472V	4.7K 1/16W	[M]
R1013	ERJ3GEYJ472V	4.7K 1/16W	[M]
R1014	ERJ3GEYJ472V	4.7K 1/16W	[M]
R1015	ERJ3GEYJ470V	47 1/16W	[M]
R1016	ERJ3GEYJ470V	47 1/16W	[M]
R1017	ERJ3GEYJ822V	8.2K 1/16W	[M]
R1018	D0GB392JA002	3.9K 1/16W	[M]
R1019	D0GB392JA002	3.9K 1/16W	[M]
R1022	ERJ3GEYJ103V	10K 1/16W	[M]
R1026	ERJ3GEYJ102V	1K 1/16W	[M]
R1028	ERJ3GEYJ822V	8.2K 1/16W	[M]
R1029	D0GB475JA008	4.7M 1/16W	[M]
R1030	D0GB101JA002	100 1/16W	[M]
R1031	D0GB273JA002	27K 1/16W	[M]
R1032	ERJ3GEYJ103V	10K 1/16W	[M]
R1035	ERJ3GEYJ103V	10K 1/16W	[M]
R1038	ERJ3GEYJ472V	4.7K 1/16W	[M]
R1039	ERJ3GEYJ153V	15K 1/16W	[M]
R1040	ERJ3GEY0R00V	0 1/16W	[M]
R1045	ERJ3GEYJ104V	100K 1/16W	[M]
R1046	ERJ3GEYJ104V	100K 1/16W	[M]
R1047	ERJ3GEYJ102V	1K 1/16W	[M]
R1048	ERJ3GEYJ102V	1K 1/16W	[M]
R1049	D0GB105JA002	1M 1/16W	[M]
R1050	D0GB105JA002	1M 1/16W	[M]
R1051	ERJ3GEYJ221V	220 1/16W	[M]
R1052	ERJ3GEYJ221V	220 1/16W	[M]
R1053	ERJ3GEYJ681V	680 1/16W	[M]
R1054	ERJ3GEYJ681V	680 1/16W	[M]
R1055	ERJ3GEYJ222V	2.2K 1/16W	[M]
R1056	ERJ3GEYJ221V	220 1/16W	[M]
R1057	ERJ3GEYJ222V	2.2K 1/16W	[M]
R1058	D0GB272JA002	2.7K 1/16W	[M]
R1059	ERJ3GEYJ103V	10K 1/16W	[M]
R1060	ERJ3GEYJ391V	390 1/16W	[M]
R1061	ERJ3GEY0R00V	0 1/16W	[M]
R1084	ERJ3GEYJ222V	2.2K 1/16W	[M]
R1085	ERJ3GEYJ473V	47K 1/16W	[M]
R1086	ERJ3GEYJ222V	2.2K 1/16W	[M]
R1087	ERJ3GEYJ473V	47K 1/16W	[M]
R1090	ERJ3GEYJ221V	220 1/16W	[M]
R1091	ERJ3GEYJ222V	2.2K 1/16W	[M]
R1092	ERJ3GEYJ222V	2.2K 1/16W	[M]
R1093	ERJ3GEYJ102V	1K 1/16W	[M]
R1094	ERJ3GEYJ102V	1K 1/16W	[M]
R1095	ERJ3GEYJ104V	100K 1/16W	[M]
R1096	ERJ3GEYJ104V	100K 1/16W	[M]
R1097	ERJ3GEYJ103V	10K 1/16W	[M]
R1098	ERJ3GEYJ103V	10K 1/16W	[M]

Ref. No.	Part No.	Part Name & Description	Remarks
		CAPACITORS	
C1	ECEA1CKA101B	100 16V	[M]
C2	ECBT1E103ZF5	0.01 25V	[M]
C101	ECJ1VB1E103K	0.01 25V	[M]
C102	ECEA1CKA101B	100 16V	[M]
C103	ECJ1VB1E103K	0.01 25V	[M]
C104	ECJ1VB1H102K	1000P 50V	[M]
C105	ECJ1VB1H102K	1000P 50V	[M]
C106	ECJ1VB1E103K	0.01 25V	[M]
C107	F1H1E473A062	0.047 25V	[M]
C108	ECJ1VC1H080D	8P 50V	[M]
C109	ECJ1VB1H102K	1000P 50V	[M]
C110	ECJ1VB1E103K	0.01 25V	[M]
C111	ECEA1HKA4R7B	4.7 50V	[M]
C112	ECJ1VB1E103K	0.01 25V	[M]
C113	ECJ1VB1H102K	1000P 50V	[M]
C114	ECEA1HKA3R3B	3.3 50V	[M]
C115	ECEA1HKA4R7B	4.7 50V	[M]
C116	ECJ1VB1C333K	0.033 16V	[M]
C117	ECJ1VB1E103K	0.01 25V	[M]
C118	ECJ1VB1E103K	0.01 25V	[M]
C119	F0A2A561A015	560P 100V	[M]
C120	ECEA1CKA100B	10 16V	[M]
C121	ECEA1HKAR47B	0.47 50V	[M]
C122	ECEA1HKA010B	1 50V	[M]
C123	ECEA1HKA010B	1 50V	[M]
C124	ECJ1VC1H101K	100P 50V	[M]
C125	ECEA1CKA220B	22 16V	[M]
C126	ECJ2VF1C105Z	1 16V	[M]
C127	ECEA1CKA220B	22 16V	[M]
C129	ECEA0JKA101B	100 6.3V	[M]
C130	ECEA0JKA101B	100 6.3V	[M]
C131	ECUV1H101JCV	100P 50V	[M]
C132	ECJ1VB1H102K	1000P 50V	[M]
C133	ECJ1VC1H270J	27P 50V	[M]
C134	ECJ1VC1H270J	27P 50V	[M]
C136	ECJ1VB1H102K	1000P 50V	[M]
C137	ECJ1VB1H332K	3300P 50V	[M]
C138	ECJ1VB1E103K	0.01 25V	[M]
C139	ECEA1HKA4R7B	4.7 50V	[M]
C141	ECEA1HKA010B	1 50V	[M]
C142	ECEA1HKA010B	1 50V	[M]
C143	ECJ1VB1H472K	4700P 50V	[M]
C144	ECJ1VB1H472K	4700P 50V	[M]
C147	ECJ1VB1H102K	1000P 50V	[M]
C148	ECJ1VB1E103K	0.01 25V	[M]
C149	ECUV1C104ZFV	0.1 16V	[M]
C201	ECJ1VB1H681K	680P 50V	[M]
C202	ECJ1VC1H101K	100P 50V	[M]
C203	ECJ1VB1H102K	1000P 50V	[M]
C204	ECJ1VB1H221K	220P 50V	[M]
C205	ECJ1VB1H221K	220P 50V	[M]
C206	ECEA1CKA100B	10 16V	[M]
C207	ECEA1CKA100B	10 16V	[M]
C208	ECEA1CKA100B	10 16V	[M]
C209	ECEA1CKA100B	10 16V	[M]
C211	ECEA1CKA100B	10 16V	[M]
C212	ECEA1CKA100B	10 16V	[M]
C213	ECEA1HKAR47B	0.47 50V	[M]
C214	ECEA1HKAR47B	0.47 50V	[M]
C215	F1J1E224A126	0.22 25V	[M]
C216	F1J1E224A126	0.22 25V	[M]
C217	ECUV1H152KBV	1500P 50V	[M]
C218	ECEA1CKA100B	10 16V	[M]
C219	ECQV1H474JZ3	0.47 50V	[M]
C220	ECQV1H474JZ3	0.47 50V	[M]
C221	ECEA1CKA100B	10 16V	[M]
C222	ECJ2VB1H333K	0.033 50V	[M]
C223	ECJ1VC1H101K	100P 50V	[M]
C224	ECEA1HKA010B	1 50V	[M]
C225	ECJ1VC1H101K	100P 50V	[M]
C226	ECJ1VC1H470J	47P 50V	[M]
C227	ECEA1CKA100B	10 16V	[M]

Ref. No.	Part No.	Part Name & Description	Remarks
C228	ECEA1CKA100B	10 16V	[M]
C229	ECEA1HKA010B	1 50V	[M]
C230	ECJ2VB1H153K	0.015 50V	[M]
C231	F1H1H821A761	820P 50V	[M]
C232	F1H1H822A022	8200P 50V	[M]
C233	F1H1H822A022	8200P 50V	[M]
C234	ECEA1HKA010B	1 50V	[M]
C235	ECEA1HKAR68B	0.68 50V	[M]
C240	ECBT1H222KB5	2200P 50V	[M]
C240	ECJ1VB1H102K	1000P 50V	[M]
C241	ECBT1H390J5	39P 50V	[M]
C242	ECBT1H222KB5	2200P 50V	[M]
C243	ECBT1H390J5	39P 50V	[M]
C244	F1D1H473A012	0.047 50V	[M]
C245	F1D1H473A012	0.047 50V	[M]
C246	F1D1H473A012	0.047 50V	[M]
C247	F1D1H473A012	0.047 50V	[M]
C248	ECBT1C472KR5	4700P 16V	[M]
C250	ECEA1HKAR22B	0.22 50V	[M]
C251	ECEA1HKA010B	1 50V	[M]
C252	ECEA1HKA010B	1 50V	[M]
C297	ECEA1CKA100B	10 16V	[M]
C298	ECEA1CKA330B	33 16V	[M]
C302	ECJ1VB1E103K	0.01 25V	[M]
C303	ECJ1VB1H102K	1000P 50V	[M]
C304	ECEA1HKA010B	1 50V	[M]
C305	ECEA1CKA221B	220 16V	[M]
C306	ECEA1HKA010B	1 50V	[M]
C308	ECJ1VC1H121J	120P 50V	[M]
C309	ECEA1AKN100B	10 10V	[M]
C310	ECEA0JKA101B	100 6.3V	[M]
C311	ECEA0JKA101B	100 6.3V	[M]
C312	ECJ1VB1E103K	0.01 25V	[M]
C313	ECJ1VB1E103K	0.01 25V	[M]
C320	ECEA1AKA220B	22 10V	[M]
C321	ECJ1VB1H103K	0.01 50V	[M]
C322	ECUV1C104KBV	0.1 16V	[M]
C323	ECUV1C104ZFV	0.1 16V	[M]
C324	ECUV1C104ZFV	0.1 16V	[M]
C325	ECJ1VC1H101K	100P 50V	[M]
C326	ECJ1VF1C474Z	0.47 16V	[M]
C328	ECJ1VC1H101K	100P 50V	[M]
C329	ECJ1VC1H101K	100P 50V	[M]
C330	ECJ1VC1H101K	100P 50V	[M]
C331	ECJ1VC1H101K	100P 50V	[M]
C332	ECJ1VC1H101K	100P 50V	[M]
C336	ECUV1H104KBV	0.1 50V	[M]
C338	ECJ1VB1E103K	0.01 25V	[M]
C339	ECJ1VB1E103K	0.01 25V	[M]
C350	ECJ1VC1H101K	100P 50V	[M]
C351	ECJ1VC1H101K	100P 50V	[M]
C352	ECJ1VC1H101K	100P 50V	[M]
C353	ECJ1VC1H101K	100P 50V	[M]
C354	ECJ1VC1H101K	100P 50V	[M]
C355	ECJ1VC1H101K	100P 50V	[M]
C356	ECJ1VC1H101K	100P 50V	[M]
C357	ECJ1VC1H102J	1000P 50V	[M]
C358	ECJ1VB1H102K	1000P 50V	[M]
C359	ECJ1VB1H102K	1000P 50V	[M]
C360	ECUV1H104KBV	0.1 50V	[M]
C361	ECJ1VC1H180J	18P 50V	[M]
C362	ECJ1VC1H180J	18P 50V	[M]
C363	F1H1H223A761	0.022 50V	[M]
C364	F1H1H331A789	330P 50V	[M]
C365	F1H1H331A789	330P 50V	[M]
C366	F1H1H331A789	330P 50V	[M]
C367	ECJ1VC1H470J	47P 50V	[M]
C368	ECJ1VC1H470J	47P 50V	[M]
C369	ECJ1VC1H560J	56P 50V	[M]
C370	ECJ1VB1E103K	0.01 25V	[M]
C371	ECJ1VB1C103K	0.01 16V	[M]
C372	ECA1CM221B	220 16V	[M]
C373	RCE1HKN100BG	10P 50V	[M]
C374	ECJ1VC1H560J	56P 50V	[M]

Ref. No.	Part No.	Part Name & Description	Remarks
C375	ECA1CM331B	330 16V	[M]
C376	ECJ1VB1E103K	0.01 25V	[M]
C377	ECJ1VB1E103K	0.01 25V	[M]
C378	ECEA1CKA100B	10 16V	[M]
C379	ECJ1VB1H561K	560P 50V	[M]
C380	ECJ1VB1H561K	560P 50V	[M]
C381	ECJ1VB1H561K	560P 50V	[M]
C383	ECJ1VB1H561K	560P 50V	[M]
C384	ECJ1VB1H561K	560P 50V	[M]
C385	ECJ1VB1H561K	560P 50V	[M]
C387	ECUV1H680JCV	68P 50V	[M]
C388	ECUV1H680JCV	68P 50V	[M]
C389	ECEA0JKA101B	100 6.3V	[M]
C390	ECEA0JKA470B	47 6.3V	[M]
C391	ECEA1AKA101B	100 10V	[M]
C392	ECEA1HKA010B	1 50V	[M]
C393	ECEA1HKA100B	10 50V	[M]
C394	ECEA1HKA100B	10 50V	[M]
C395	ECEA1HKA100B	10 50V	[M]
C396	ECEA1HKA2R2B	2.2 50V	[M]
C397	RCE1AM102B	1000 10V	[M]
C398	ECJ1VB1H102K	1000P 50V	[M]
C401	ECJ1VB1H681K	680P 50V	[M]
C402	ECJ1VC1H101K	100P 50V	[M]
C403	ECJ1VB1H102K	1000P 50V	[M]
C404	ECJ1VB1H221K	220P 50V	[M]
C405	ECJ1VB1H221K	220P 50V	[M]
C406	ECEA1CKA100B	10 16V	[M]
C407	ECEA1CKA100B	10 16V	[M]
C408	ECEA1CKA100B	10 16V	[M]
C409	ECEA1CKA100B	10 16V	[M]
C410	F1H1A2240004	0.22 10V	[M]
C411	ECEA1CKA100B	10 16V	[M]
C412	ECEA1CKA100B	10 16V	[M]
C413	ECEA1HKAR47B	0.47 50V	[M]
C414	ECEA1HKAR47B	0.47 50V	[M]
C415	F1J1E224A126	0.22 25V	[M]
C416	F1J1E224A126	0.22 25V	[M]
C417	ECUV1H152KBV	1500P 50V	[M]
C418	ECEA1CKA100B	10 16V	[M]
C419	ECQV1H474JZ3	0.47 50V	[M]
C420	ECQV1H474JZ3	0.47 50V	[M]
C421	ECEA1CKA100B	10 16V	[M]
C422	ECJ2VB1H333K	0.033 50V	[M]
C423	ECJ1VC1H101K	100P 50V	[M]
C424	ECEA1HKA010B	1 50V	[M]
C425	ECJ1VC1H101K	100P 50V	[M]
C426	ECJ1VC1H470J	47P 50V	[M]
C427	ECEA1CKA100B	10 16V	[M]
C428	ECEA1CKA100B	10 16V	[M]
C429	ECEA1HKA010B	1 50V	[M]
C430	ECJ2VB1H153K	0.015 50V	[M]
C431	F1H1H821A761	820P 50V	[M]
C432	F1H1H822A022	8200P 50V	[M]
C433	F1H1H822A022	8200P 50V	[M]
C434	ECEA1HKA010B	1 50V	[M]
C435	ECEA1HKAR68B	0.68 50V	[M]
C440	ECBT1H222KB5	2200P 50V	[M]
C440	ECJ1VB1H102K	1000P 50V	[M]
C441	ECBT1H390J5	39P 50V	[M]
C442	ECBT1H222KB5	2200P 50V	[M]
C442	F1H1A2240004	0.22 10V	[M]
C443	ECBT1H390J5	39P 50V	[M]
C443	ECUV1H104KBV	0.1 50V	[M]
C444	ECJ1VB1H471K	470P 50V	[M]
C444	F1D1H473A012	0.047 50V	[M]
C445	F1D1H473A012	0.047 50V	[M]
C446	F1D1H473A012	0.047 50V	[M]
C447	F1D1H473A012	0.047 50V	[M]
C448	ECBT1H103KB5	0.01 50V	[M]
C450	ECEA1HKAR22B	0.22 50V	[M]
C451	ECEA1HKA010B	1 50V	[M]
C452	ECEA1HKA010B	1 50V	[M]
C497	ECEA1CKA100B	10 16V	[M]

Ref. No.	Part No.	Part Name & Description	Remarks
C501	ECBT1H103KB5	0.01 50V	[M]
C502	ECA1CM471B	470 16V	[M]
C503	ECBT1H102KB5	1000P 50V	[M]
C504	ECKR1H103MD5	0.01 50V	[M]
C505	ECEA1CKA101B	100 16V	[M]
C506	ECKR1H103MD5	0.01 50V	[M]
C507	ECEA1CKA100B	10 16V	[M]
C508	ECEA1CKA100B	10 16V	[M]
C509	ECKR1H103MD5	0.01 50V	[M]
C510	ECA1EM101B	100 25V	[M]
C511	ECKR1H103MD5	0.01 50V	[M]
C512	ECEA1EKA330B	33 25V	[M]
C513	ECEA1EKA100B	10 25V	[M]
C514	ECKR1H103MD5	0.01 50V	[M]
C520	ECA1JM222B	2200 63V	[M]
C530	ECQV1H184JL3	0.18 50V	[M]
C538	ECEA1HKA2R2B	2.2 50V	[M]
C540	ECA1JM222B	2200 63V	[M]
C620	ECBT1E223ZF5	0.022 25V	[M]
C621	ECBT1E223ZF5	0.022 25V	[M]
C637	ECBT1H103KB5	0.01 50V	[M]
C638	ECBT1H102KB5	1000P 50V	[M]
C639	ECEA0JKA470B	47 6.3V	[M]
C640	ECEA1HKA3R3B	3.3 50V	[M]
C641	ECEA1VKA220B	22 35V	[M]
C642	ECEA1VKA220B	22 35V	[M]
C669	ECBT1H101KB5	100P 50V	[M]
C671	F1D1H473A012	0.047 50V	[M]
C672	ECBT1H101KB5	100P 50V	[M]
C673	ECBT1H101KB5	100P 50V	[M]
C674	ECEA1EKA470B	47 25V	[M]
C675	F1D1H1040002	0.1 50V	[M]
C678	ECBT1H103KB5	0.01 50V	[M]
C681	ECBT1H101KB5	100P 50V	[M]
C682	ECBT1H101KB5	100P 50V	[M]
C701	ECEA0JKA330I	33 6.3V	[M]
C702	ECJ1VB0J474K	0.47 6.3V	[M]
C703	ECEA0JKA101I	100 6.3V	[M]
C704	ECUVNC104KBV	0.1 16V	[M]
C705	ECUVNC104ZFV	0.1 16V	[M]
C706	F1H0J105A002	1 6.3V	[M]
C707	ECJ1VB1C393K	0.039 16V	[M]
C710	ECJ1VB1H471K	470P 50V	[M]
C711	ECUVNC104KBV	0.1 16V	[M]
C712	ECUVNC104KBV	0.1 16V	[M]
C713	ECUVNC104KBV	0.1 16V	[M]
C714	ECEA0JKA101I	100 6.3V	[M]
C715	ECUV1C224KBV	0.22 16V	[M]
C716	ECJ1VB1H681K	680P 50V	[M]
C717	ECUVNC104ZFV	0.1 16V	[M]
C718	ECJ1VB1C823K	0.082 16V	[M]
C721	ECJ1VC1H120J	12P 50V	[M]
C722	ECJ1VC1H120J	12P 50V	[M]
C723	ECEA0JKA221I	220 6.3V	[M]
C724	ECUVNC104KBV	0.1 16V	[M]
C725	ECJ1VB1H102K	1000P 50V	[M]
C726	ECJ1VB1H102K	1000P 50V	[M]
C727	ECA1HAK010XI	1 50V	[M]
C728	ECA1HAK010XI	1 50V	[M]
C729	ECUVNC104KBV	0.1 16V	[M]
C730	ECUVNC104ZFV	0.1 16V	[M]
C731	ECEA0JKA221I	220 6.3V	[M]
C733	ECUVNC104KBV	0.1 16V	[M]
C734	ECEA1AKA221I	220 10V	[M]
C735	ECUVNC104ZFV	0.1 16V	[M]
C736	ECUVNC104ZFV	0.1 16V	[M]
C737	ECUVNC104ZFV	0.1 16V	[M]
C738	F1H1C473A088	0.047 16V	[M]
C739	ECJ1VB1H103K	0.01 50V	[M]
C740	ECUVNC104KBV	0.1 16V	[M]
C741	ECJ1VB1H102K	1000P 50V	[M]
C742	F1H1C473A088	0.047 16V	[M]
C743	ECUVNC104ZFV	0.1 16V	[M]
C744	ECJ1VB1C153K	0.015 16V	[M]

Ref. No.	Part No.	Part Name & Description	Remarks
C746	ECUVNC104KBV	0.1 16V	[M]
C747	ECJ1VB1H471K	470P 50V	[M]
C748	ECUVNC104KBV	0.1 16V	[M]
C749	F1H1H392A022	3900P 50V	[M]
C750	ECUVNC104KBV	0.1 16V	[M]
C751	ECUVNC104KBV	0.1 16V	[M]
C752	ECJ1VB1H103K	0.01 50V	[M]
C753	ECJ1VB1H471K	470P 50V	[M]
C755	ECUVNC104KBV	0.1 16V	[M]
C757	ECEA0JKA101I	100 6.3V	[M]
C758	ECUVNC104KBV	0.1 16V	[M]
C770	ECUVNC104KBV	0.1 16V	[M]
C780	ECUVNC104KBV	0.1 16V	[M]
C781	ECUVNC104KBV	0.1 16V	[M]
C782	ECUVNC104KBV	0.1 16V	[M]
C901	ECBT1H101KB5	100P 50V	[M]
C902	ECBT1H101KB5	100P 50V	[M]
C903	ECBT1H101KB5	100P 50V	[M]
C918	ECBT1H101KB5	100P 50V	[M]
C919	ECBT1H101KB5	100P 50V	[M]
C920	ECBT1H101KB5	100P 50V	[M]
C921	ECBT1H101KB5	100P 50V	[M]
C922	ECBT1H101KB5	100P 50V	[M]
C923	ECBT1H101KB5	100P 50V	[M]
C924	ECBT1H101KB5	100P 50V	[M]
C950	ECA1EM222B	2200 25V	[M]
C951	ECKR1H103ZF5	0.01 50V	[M]
C952	ECEA1AKA470B	47 10V	[M]
C953	ECKR1H103MD5	0.01 50V	[M]
C954	ECKR1H103ZF5	0.01 50V	[M]
C955	ECA1HM101B	100 50V	[M]
C956	ECA1JM101B	100 63V	[M]
C957	ECEA2AU100B	10 100V	[M]
C958	ECKR1H103MD5	0.01 50V	[M]
C959	ECKR2H103ZF5	0.01 500V	[M]
C960	ECQE1104KF3	0.1 100V	[M]
C961	ECA1CM102B	1000 16V	[M]
C963	ECEA1VKA4R7B	4.7 35V	[M]
C1001	F1H1H103A753	0.01 50V	[M]
C1002	ECEA1HKN2R2B	2.2 50V	[M]
C1003	ECUV1H152KBV	1500P 50V	[M]
C1006	ECEA1HKA010B	1 50V	[M]
C1007	F0A2A472A015	4700P 100V	[M]
C1008	ECEA1HKA010B	1 50V	[M]
C1009	ECEA1AKA470B	47 10V	[M]
C1010	ECA1EM101B	100 25V	[M]
C1011	ECQV1H473JZ3	0.047 50V	[M]
C1012	ECJ1VB1H102K	1000P 50V	[M]
C1013	ECJ1VB1H102K	1000P 50V	[M]
C1014	ECJ1VB1H102K	1000P 50V	[M]
C1015	ECJ1VB1H102K	1000P 50V	[M]
C1016	ECJ1VB1H222K	2200P 50V	[M]
C1017	ECJ1VB1H222K	2200P 50V	[M]
C1018	ECJ1VB1H103K	0.01 50V	[M]
C1019	ECJ1VB1H102K	1000P 50V	[M]
C1020	ECJ1VB1H471K	470P 50V	[M]
C1021	ECJ1VB1H471K	470P 50V	[M]
C1022	ECJ1VB1H102K	1000P 50V	[M]
C1023	ECJ1VB1H102K	1000P 50V	[M]
C1026	ECEA0JKA470B	47 6.3V	[M]
C1027	ECJ1VB1H102K	1000P 50V	[M]
C1030	ECEA1AKA101B	100 10V	[M]
C1031	ECEA1AKA101B	100 10V	[M]
C1032	F1C1C183A001	0.018 16V	[M]
C1033	F1C1C183A001	0.018 16V	[M]
C1034	ECEA1HKA3R3B	3.3 50V	[M]
C1035	ECEA1HKA3R3B	3.3 50V	[M]
C1036	ECJ1VB1C333K	0.033 16V	[M]
C1037	ECEA1HKA3R3B	3.3 50V	[M]
C1038	ECJ1VB1H221K	220P 50V	[M]
C1039	ECJ1VB1H221K	220P 50V	[M]
C1040	ECEA1CKA100B	10 16V	[M]
C1041	ECEA1CKA100B	10 16V	[M]
C1042	ECEA1CKA220B	22 16V	[M]

Ref. No.	Part No.	Part Name & Description	Remarks
C1043	ECEA1HKA4R7B	4.7 50V	[M]
C1044	ECEA1AKA330B	33 10V	[M]
C1045	ECEA1AKA220B	22 10V	[M]
C1046	ECEA1AKA221Q	220 10V	[M]
C1047	ECEA1HKA010B	1 50V	[M]
C1048	ECEA1HKA010B	1 50V	[M]
C1049	ECJ1VB1H102K	1000P 50V	[M]
C1050	ECJ1VB1H102K	1000P 50V	[M]
C1051	ECEA1HKA010B	1 50V	[M]
C1052	ECEA1HKA010B	1 50V	[M]
C1053	ECA1CM221B	220 16V	[M]
C1054	ECEA1HKA3R3B	3.3 50V	[M]
C1055	ECEA1HKA0R1B	0.1 50V	[M]
C1056	ECEA1CKA100B	10 16V	[M]

Ref. No.	Part No.	Part Name & Description	Remarks
C1057	ECJ1VB1H102K	1000P 50V	[M]
C1058	ECJ1VB1H102K	1000P 50V	[M]
C1064	ECEA1HKA3R3B	3.3 50V	[M]
		CHIP JUMPER	
RJ705	ERJ3GEY0R00V	0 1/16W	[M]
RJ706	ERJ3GEY0R00V	0 1/16W	[M]
RJ707	ERJ3GEY0R00V	0 1/16W	[M]
RJ712	ERJ3GEY0R00V	0 1/16W	[M]
RJ715	ERJ3GEY0R00V	0 1/16W	[M]
RJ722	ERJ3GEY0R00V	0 1/16W	[M]
RJ733	ERJ3GEY0R00V	0 1/16W	[M]

23.5. Packing Materials & Accessories Parts List

Ref. No.	Part No.	Part Name & Description	Remarks
		PACKING MATERIALS	
P1	RPGX1203	PACKING CASE	[M] EG-S
P1	RPGX1204	PACKING CASE	[M] E-K
P1	RPGX1205	PACKING CASE	[M] EB-S
P1	RPGX1278	PACKING CASE	[M] E-S
P1	RPGX1279	PACKING CASE	[M] EG-K
P2	RPNX0210	POLYFOAM	[M]
P3	RPFX0007	MIRAMAT BAG	[M]
		ACCESSORIES	
A1	N2QAHB000046	REMOTE CONTROL	[M] K
A1	N2QAHB000044	REMOTE CONTROL	[M] S
A1-1	RKK-HTR0283	R/C BATTERY COVER	[M]

Ref. No.	Part No.	Part Name & Description	Remarks
A2	RJA0019-2X	AC CORD	[M] E EG-K/ E-S ⚠
A2	RJA0053-3X	AC CORD	[M] EB-S ⚠
A3	RQT7333-E	O/I BOOK (Sp/Po/Cz)	[M] E-K/ E-S/ EG-S
A3	RQT7334-D	O/I BOOK (Ge/It/Fr)	[M] EG-K
A3	RQT7335-H	O/I BOOK (Du/Da/Sw)	[M] EG-K/ EG-S
A3	RQT7336-B	O/I BOOK (En)	[M] E-K/ E-S/ EB-S
A4	RSA0007-L	FM ANTENNA	[M]
A5	N1DADYY00002	AM LOOP ANTENNA	[M]
A6	SJP9009	ANTENNA ADAPTER	[M] EB
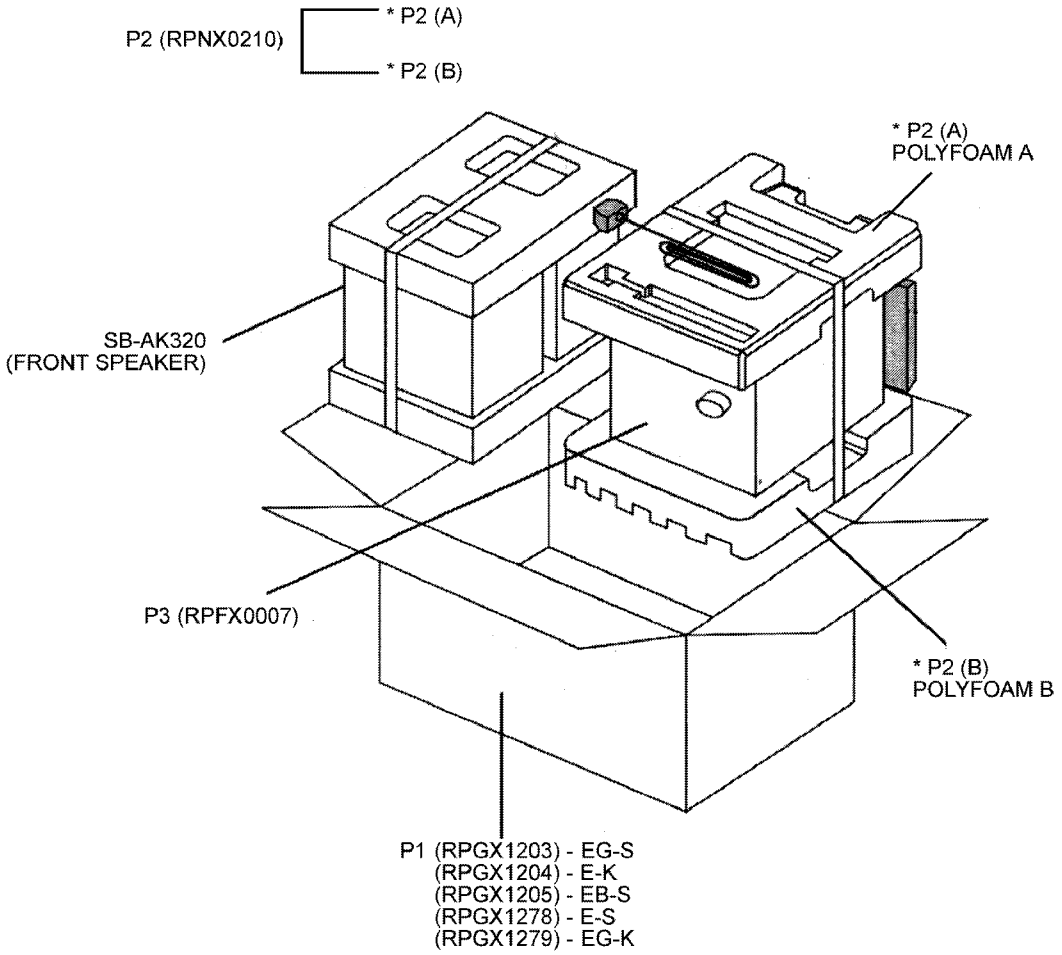
23.6. Packaging