HCD-VX888

SERVICE MANUAL

E Model

Ver 1.1 2001.07

- HCD-VX888 is the tuner, deck, Video CD and amplifier section in MHC-VX888.

Dolby noise reduction manufactured under license from Dolby Laboratories Licensing Corporation. "DOLBY" and the double-D symbol DD are trademarks of Dolby Laboratories Licensing Corporation.

CD Section	Model Name Using Similar Mechanism	NEW
	CD Mechanism Type	CDM58E-30BD61A
	Base Unit Name	BU-30BD61A
	Optical Pick-up Name	A-MAX.3
Tape deck Section	Model Name Using Similar Mechanism	HCD-DX80
	Tape Transport Mechanism Type	TCM-230AWR41

SPECIFICATIONS

Amplifier section

The following measured at AC 120, 220, 240V, 50/60 Hz

DIN power output (rated)	160 + 160 watts (6 ohms at 1 kHz, DIN)
Continuous RMS power output (reference)	200 + 200 watts (6 ohms at 1 kHz, 10% THD)
Inputs	
GAME (VIDEO): (phono jacks)	1Vp-p, 75 ohms
GAME (AUDIO): (phono jacks)	voltage 250 mV, impedance 47 kilohms
MD/VIDEO (AUDIO) IN: (phono jacks)	voltage 450 mV/250 mV, impedance 47 kilohms
MIC 1/2: (phone jack)	sensitivity 1 mV, impedance 10 kilohms
Outputs	
VIDEO OUT: (phono jacks)	max. output level 1 Vp-p, unbalanced, Sync negative, load impedance 75 ohms
S. VIDEO OUT: (4-pin/mini-DIN jack)	Y: 1 Vp-p, unbalanced, Sync negative, C: 0.286Vp-p, load impedance 75 ohms
AUDIO OUT: (phono jacks)	voltage 140 mV, impedance 47 kilohms
PHONES: (stereo mini jack)	accepts headphones of 8 ohms or more
FRONT SPEAKER:	accepts impedance of 6 to 16 ohms
SURROUND SPEAKER:	accepts impedance of 6 to 16 ohms

VIDEO CD/CD player section

System	Compact disc and digital audio system
Laser	Semiconductor laser (λ=780nm)
Laser Output	Max. 44.6 µW* *This output is the value measured at a distance of 200 mm from the objective lens surface on the Optical Pick-up Block with 7 mm aperture.
Frequency response	2 Hz – 20 kHz (±0.5 dB)
Wave length	780 – 790 nm
Signal-to-noise ratio	More than 90 dB
Dynamic range	More than 90 dB
Video color system format	NTSC, PAL
CD OPTICAL DIGITAL OUT (Square optical connector jack, rear panel)	
Wave length	660 nm
Output level	–18 dBm

Tape player section

Recording system	4-track 2-channel stereo
Frequency response (DOLBY NR OFF)	40 – 13,000 Hz (±3 dB), using Sony TYPE I cassette 40 – 14,000 Hz (±3 dB), using Sony TYPE II cassette
Wow and flutter	±0.15% W.Peak (IEC) 0.1% W.RMS (NAB) ±0.2% W.Peak (DIN)

Tuner section

FM stereo, FM/AM superheterodyne tuner

FM tuner section

Tuning range	87.5 – 108.0 MHz
Antenna	FM lead antenna
Antenna terminals	75 ohm unbalanced
Intermediate frequency	10.7 MHz

AM tuner section

Tuning range	
Latin American models:	530 – 1,710 kHz (with the interval set at 10 kHz) 531 – 1,710 kHz (with the interval set at 9 kHz)
Middle Eastern models:	531 – 1,602 kHz (with the interval set at 9 kHz)
Other models:	531 – 1,602 kHz (with the interval set at 9 kHz) 530 – 1,710 kHz (with the interval set at 10 kHz)
Antenna	AM loop antenna
Antenna terminals	External antenna terminal
Intermediate frequency	450 kHz

– Continued on next page –

MINI HI-FI COMPONENT SYSTEM

9-873-817-12
2001G0500-1
© 2001.7

Sony Corporation
Home Audio Company
Shinagawa Tec Service Manual Production Group

SONY®

General

Power requirements	
Australian models:	230 – 240 V AC, 50/60 Hz
Mexican models:	120 V AC, 60 Hz
Thailand models:	220 V AC, 50/60 Hz
Other models:	120 V, 220 V or 230 – 240 V AC, 50/60 Hz Adjustable with voltage selector
Power consumption	250 watts
Dimensions (w/h/d)	Approx. 280 x 360 x 425 mm
Mass	Approx. 10.5 kg

Design and specifications are subject to change without notice.

MODEL IDENTIFICATION

— BACK PANEL —

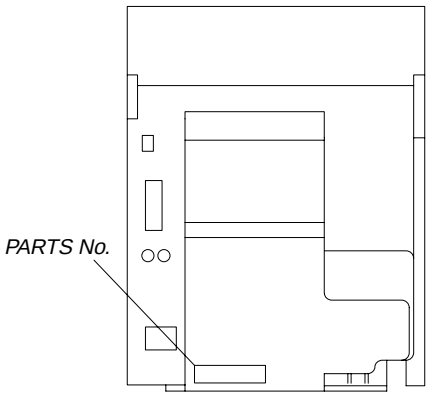

MODEL	PARTS No.
E3, EA, SP2/6, IA models	4-232-028-2□
E91 model	4-232-028-4□

- Abbreviation
  E3 : 240 V AC Area in E model
  E91 : 220 V AC Area in E model
  EA : Saudi Arabia model
  SP2/6 : Malaysia, singapore model
  IA : Indonesia model

NOTES ON HANDLING THE OPTICAL PICK-UP BLOCK OR BASE UNIT

The laser diode in the optical pick-up block may suffer electrostatic break-down because of the potential difference generated by the charged electrostatic load, etc. on clothing and the human body.
During repair, pay attention to electrostatic break-down and also use the procedure in the printed matter which is included in the repair parts.
The flexible board is easily damaged and should be handled with care.

NOTES ON LASER DIODE EMISSION CHECK

The laser beam on this model is concentrated so as to be focused on the disc reflective surface by the objective lens in the optical pick-up block. Therefore, when checking the laser diode emission, observe from more than 30 cm away from the objective lens.

Laser component in this product is capable of emitting radiation exceeding the limit for Class 1.

This appliance is classified as a CLASS 1 LASER product. The CLASS 1 LASER PRODUCT MARKING is located on the rear exterior.

CAUTION
Use of controls or adjustments or performance of procedures other than those specified herein may result in hazardous radiation exposure.

Notes on chip component replacement

- Never reuse a disconnected chip component.
- Notice that the minus side of a tantalum capacitor may be damaged by heat.

Flexible Circuit Board Repairing

- Keep the temperature of soldering iron around 270˚C during repairing.
- Do not touch the soldering iron on the same conductor of the circuit board (within 3 times).
- Be careful not to apply force on the conductor when soldering or unsoldering.

SAFETY-RELATED COMPONENT WARNING!!

COMPONENTS IDENTIFIED BY MARK ⚠ OR DOTTED LINE WITH MARK ⚠ ON THE SCHEMATIC DIAGRAMS AND IN THE PARTS LIST ARE CRITICAL TO SAFE OPERATION. REPLACE THESE COMPONENTS WITH SONY PARTS WHOSE PART NUMBERS APPEAR AS SHOWN IN THIS MANUAL OR IN SUPPLEMENTS PUBLISHED BY SONY.

TABLE OF CONTENTS

1. GENERAL 4

2. DISASSEMBLY
2-1. Disassembly Flow 7
2-2. Case (Top) 8
2-3. Loading Panel 8
2-4. CD Mechanism Deck (CDM58E-30BD61A) 9
2-5. Front Panel Section 9
2-6. Tape Mechanism Deck (TCM-230AWR41) 10
2-7. Back Panel Section 10
2-8. Main Board 11
2-9. LEAF SW Board, HEAD (A) Board, HEAD (B) Board 11
2-10. Base Unit (BU-30BD61A) 12
2-11. VIDEO Board, DRIVER Board 12
2-12. MOTOR Board, ADDRESS SENSOR Board 13

3. TEST MODE 14

4. MECHANICAL ADJUSTMENTS 17

5. ELECTRICAL ADJUSTMENTS 17

6. DIAGRAMS
6-1. Block Diagram – TUNER/CD Section – 23
6-2. Block Diagram – MAIN Section – 24
6-3. Block Diagram – DISPLAY/POWER Section – 25
6-4. Block Diagram – VIDEO CD Section – 26
6-5. Note for Printed Wiring Boards and Schematic Diagrams 27
6-6. Schematic Diagram – BD Board – 28
6-7. Printed Wiring Board – BD Board – 29
6-8. Schematic Diagram – MAIN Board (1/4) – 30
6-9. Schematic Diagram – MAIN Board (2/4) – 31
6-10. Schematic Diagram – MAIN (3/4)/HEAD Board – 32
6-11. Schematic Diagram – MAIN Board (4/4) – 33
6-12. Printed Wiring Board – MAIN Board – 34
6-13. Schematic Diagram – VIDEO SWITCH Board – 35
6-14. Printed Wiring Boards – HEAD (A)/(B) Board – 35
6-15. Printed Wiring Board – VIDEO SWITCH Board – 35
6-16. Schematic Diagram – POWER AMP/SENSOR Board – 36
6-17. Printed Wiring Boards – POWER AMP/SENSOR Board – 37
6-18. Schematic Diagram – PANEL Board – 38
6-19. Printed Wiring Board – PANEL Board – 39
6-20. Schematic Diagram – CD SWITCH/PAD SWITCH Board – 40
6-21. Printed Wiring Boards – CD SWITCH/PAD SWITCH Board – 41
6-22. Schematic Diagram – LEAF SW Board – 42
6-23. Printed Wiring Board – LEAF SW Board – 42
6-24. Schematic Diagram – ADDRESS SENSOR/DRIVER/MOTOR Board – 43
6-25. Printed Wiring Boards – ADDRESS SENSOR/DRIVER/MOTOR Board – 43
6-26. Schematic Diagram – VIDEO Board (1/3) – 44
6-27. Schematic Diagram – VIDEO Board (2/3) – 45
6-28. Schematic Diagram – VIDEO Board (3/3) – 46
6-29. Printed Wiring Board – VIDEO Board – 47
6-30. Schematic Diagram – MAIN TRANS/SUB TRANS Board – 48
6-31. Printed Wiring Boards – MAIN TRANS/SUB TRANS Board – 49
6-32. IC Pin Function Description 55

7. EXPLODED VIEWS
7-1. Cabinet Section 60
7-2. Front Panel Section 61
7-3. Main Board Section 62
7-4. CD Mechanism Deck Section (CDM58E-30BD61A) 63
7-5. Base Unit Section (BU-30BD61A) 64
7-6. Tape Mechanism Deck Section-1 (TCM-230AWR41) 65
7-7. Tape Mechanism Deck Section-2 (TCM-230AWR41) 66

8. ELECTRICAL PARTS LIST 67

SECTION 1
GENERAL

This section is extracted from instruction manual.

Parts Identification

Main unit

The items are arranged in alphabetical order. Refer to the pages indicated in parentheses ( ) for details.

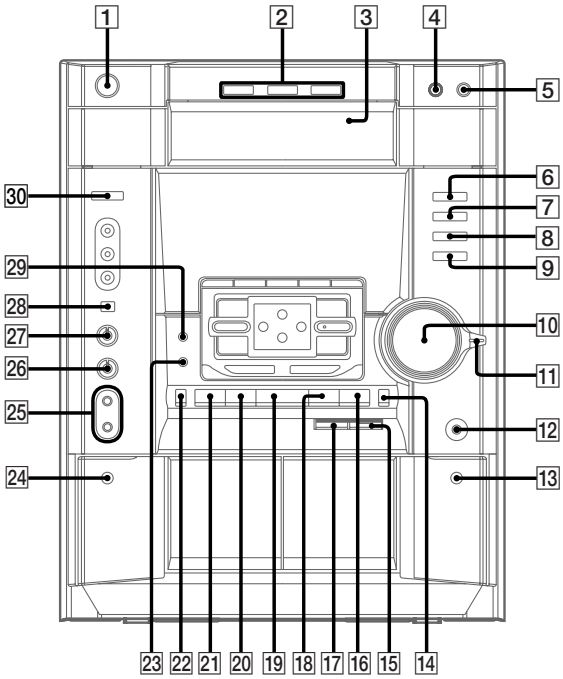

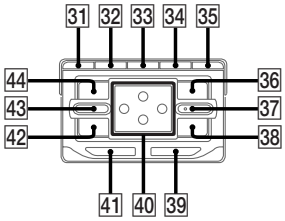

CD 6 (9, 11~14, 20, 22)
CD SYNC HI-DUB 17 (21, 22)
CINEMA SPACE 39 (25)

DECK A ⏏ 24 (20, 21)
DECK B ⏏ 13 (20, 21)
DIRECTION 33 (20~22, 27)
DISC 1~3 2 (11~14, 22)
DISC SKIP/EX-CHANGE 4 (11~14)
Disc tray 3 (11)
DISPLAY 31 (10, 15, 32)
DOLBY NR 34 (20~22)

ECHO LEVEL 27 (26)
EDIT 33 (21)
EFFECT ON/OFF 43 (24, 26)
ENTER 37 (10, 12, 14, 17, 18, 23, 25, 28, 33)

FM MODE 34 (19, 33)

GAME 30 (29)
GAME EQ 42 (8, 24, 29)
GROOVE 41 (24)

KARAOKE PON 29 (26)

MD (VIDEO) 9 (29, 32)
MIC 1/2 25 (26)
MIC LEVEL 26 (26)
MOVIE EQ 36 (8, 24, 29)
MUSIC EQ 44 (8, 24, 29)

P FILE 38 (25)
PICTURE EFFECT 23 (17)
PHONES jack 12
: Connect the headphones
PLAY MODE 35 (11, 13, 22, 33)

REC PAUSE/START 15 (21, 22, 27)
REPEAT 34 (12, 14)

SHUTTLE 11 (12, 13)
SPECTRUM 32 (26)
SURROUND SPEAKER MODE 28 (24)

TAPE A/B 8 (20, 21, 27)
TUNER/BAND 7 (18, 19, 21)
TUNER MEMORY 35 (18)

VOLUME control 10 (28)
: Adjusts the volume.

BUTTON DESCRIPTIONS

I/⏻ (power) 1 (8, 9, 19, 29, 32, 33)
⏏ OPEN/CLOSE (disc tray) 5 (11, 12, 14)
■ (stop) 20 (11~13, 16, 17, 20, 21, 33)
◄► (play) 19 (11~14, 16, 21, 27)
►►I (go forward) 16 (11~14, 16~21)
II (pause) 18 (11, 13, 20, 21)
I◄◄ (go back) 21 (11~14, 16~21)
◄◄/– (rewind) 22 (12, 13, 17~21, 33)
►►/+ (fast forward) 14 (12, 13, 17~21)
▲/▼/◄/► (cursor) 40 (10, 22, 25, 28)

Remote Control

The items are arranged in alphabetical order. Refer to the pages indicated in parentheses ( ) for details.

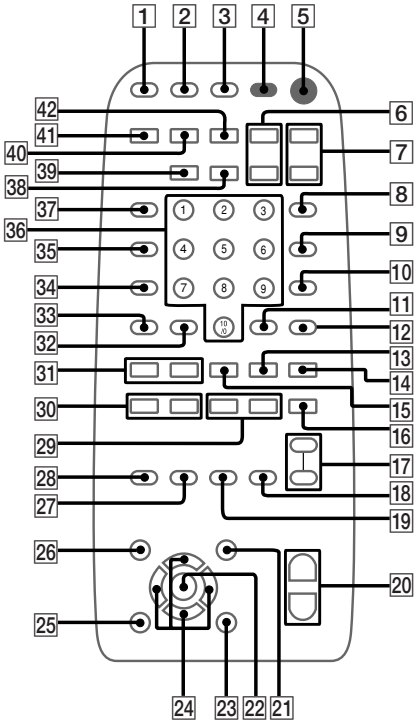

CD 41 (9, 11~14, 20, 22)
CINEMA SPACE 19 (25)
CLEAR 33 (14, 16)
CLOCK/TIMER SELECT 2 (23, 28)
CLOCK/TIMER SET 3 (10, 22, 28)

D.SKIP 12 (11~14)
DISPLAY 37 (10, 15, 32)

EFFECT ON/OFF 18 (24, 26)
ENTER 22 (10, 12, 14, 17, 18, 23, 25, 28)

GAME 39 (29)
GAME EQ 25 (8, 24, 29)

KARAOKE PON 34 (26)
KEY CONTROL 17 (26)

MD (VIDEO) 38 (29, 32)

MOVIE EQ 21 (8, 24, 29)
MUSIC EQ 26 (8, 24, 29)

NEXT 31 (12, 16, 17)
Numeric buttons 36 (13, 16)

ON SCREEN 11 (15)

PREV 31 (12, 15, 16)
PICTURE EFFECT 27 (17)
P FILE 23 (25)

REPEAT 9 (12, 14)
RETURN ↶ 15 (12)

SLEEP 1 (27)
SURROUND SPEAKER MODE 28 (24)
SPECIAL MENU 10 (16, 17)
SPECTRUM 35 (26)
SELECT 13 (12)

TAPE A/B 42 (20, 21, 27)
TUNER/BAND 40 (18, 19, 21)
TV I/⏻ 4 (9)
TV VIDEO 8 (9)
TV VOL +/– 6 (9)
TV CH +/– 7 (9)

VOL +/– 20 (28)
: Adjusts the volume.

BUTTON DESCRIPTIONS

I/⏻ (power) 5 (8, 9, 19, 29, 32, 33)
◄► (play) 13 (11~14, 16, 21, 27)
❚❚ (pause) 14 (11, 13, 20, 21)
■ (stop) 16 (11~13, 16, 17, 20, 21, 33)
⏮ (go back)/PRESET – 30 (11~14, 16~21)
⏭ (go forward)/PRESET + 30 (11~14, 16~21)
◄◄ (rewind)/TUNING – 29 (12, 13, 17~21, 33)
►► (fast forward)/TUNING + 29 (12, 13, 17~21)
▲/▼/◄/► (cursor) 24 (10, 22, 25, 28)

Inserting the batteries into the remote control

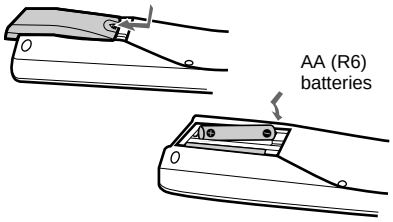

Using the remote

To	Press
Turn the TV on or off	TV I/⏻.
Switch the TV's video input	TV/VIDEO
Change the TV Channel	TV CH +/–
Adjust the volume of the TV speaker	TV VOL +/–

Tip
When the remote no longer operates the system, replace both batteries with new ones.

Note
If you do not use the remote for a long period of time, remove the batteries to avoid possible damage from battery leakage.

Setting the time

1 **Turn on the system.**

2 **Press CLOCK/TIMER SET on the remote.**
When you set the time for the first time, proceed to step 5.

3 **Press cursor ▼/▲ repeatedly to select CLOCK SET.**

4 **Press ENTER.**

5 **Press cursor ▼/▲ repeatedly to set the hour.**

6 **Press ENTER.**

7 **Press cursor ▼/▲ repeatedly to set the minute.**

8 **Press ENTER.**
The clock starts working.

Tip
If you have made a mistake or want to change the time, start over from step 2.

Note
The clock settings are canceled when you disconnect the power cord or if a power failure occurs.

Saving the power in standby mode

Press DISPLAY repeatedly when the power is off.
Each time you press the button, the system switches cyclically as follows:
Demonstration → Clock → Power Saving Mode

Tips
- The I/⏻ indicator light up even in the Power Saving Mode.
- The timer works in the Power Saving Mode.

Note
You cannot set the time in the Power Saving Mode.

To cancel the Power Saving Mode
Press DISPLAY once to show the demonstration, twice to show the clock display.

SECTION 2
DISASSEMBLY

• This set can be disassembled in the order shown below.

2-1. DISASSEMBLY FLOW

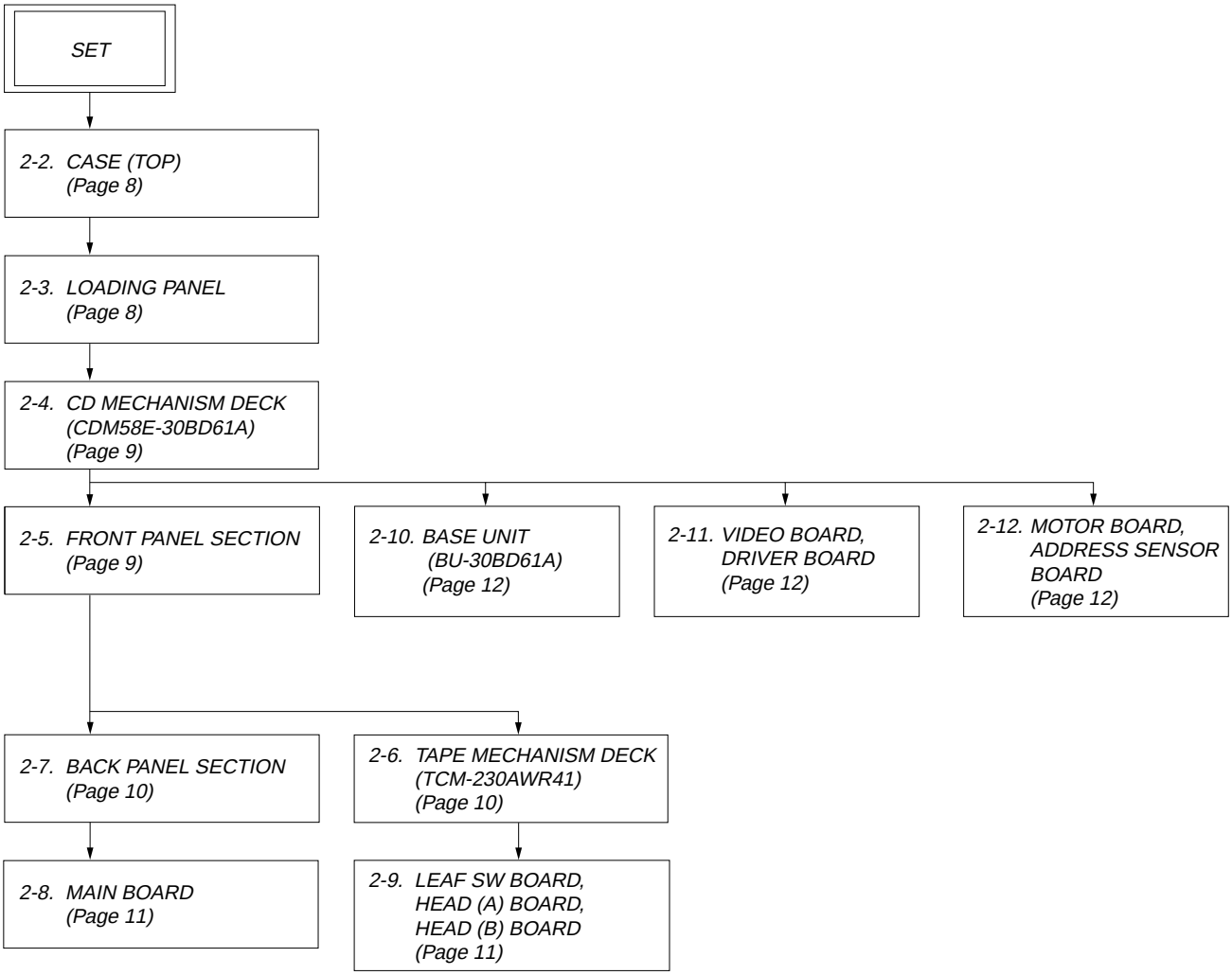

Note: Follow the disassembly procedure in the numerical order given.

2-2. CASE (TOP)

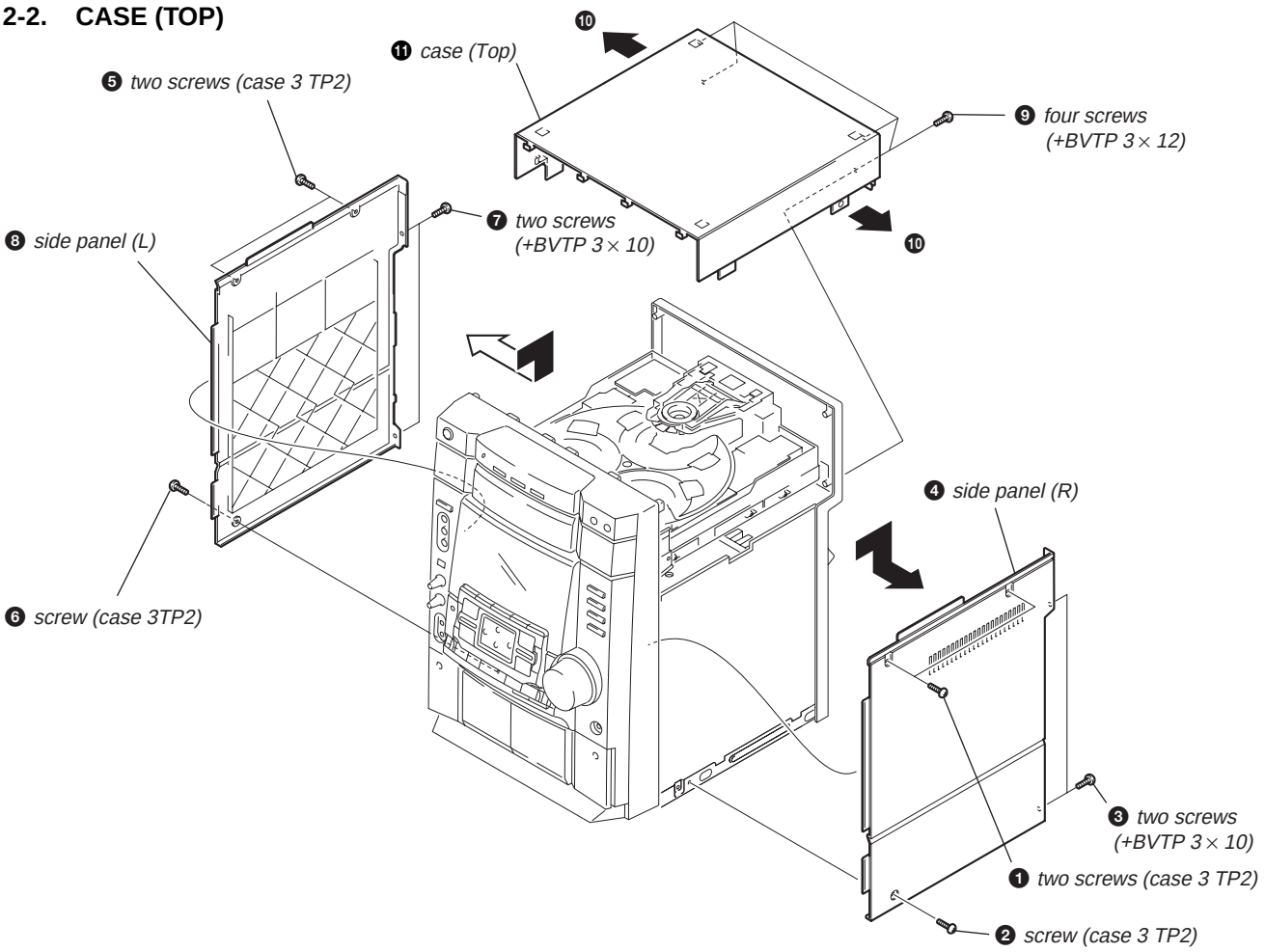

2-3. LOADING PANEL

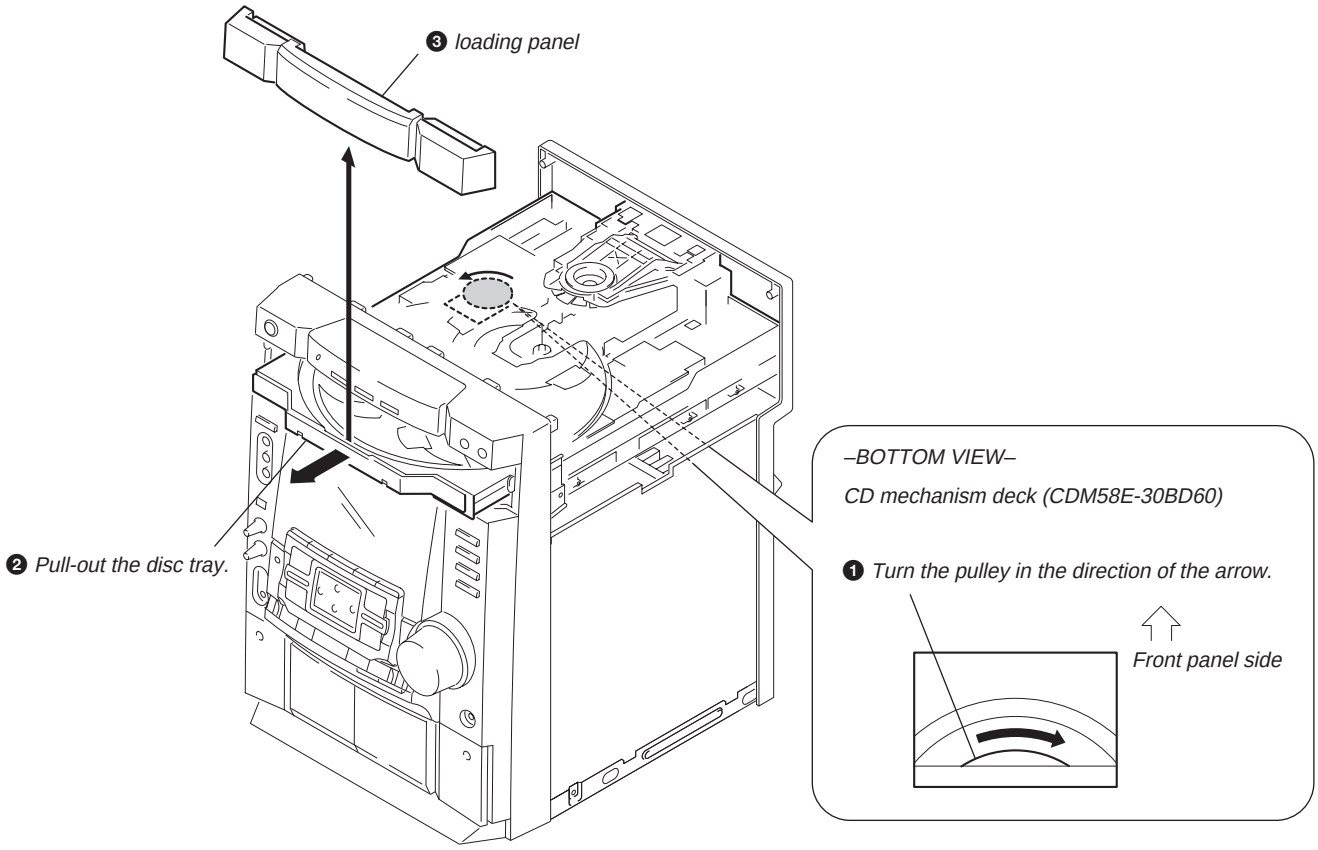

2-4. CD MECHANISM DECK (CDM58E-30BD61A)

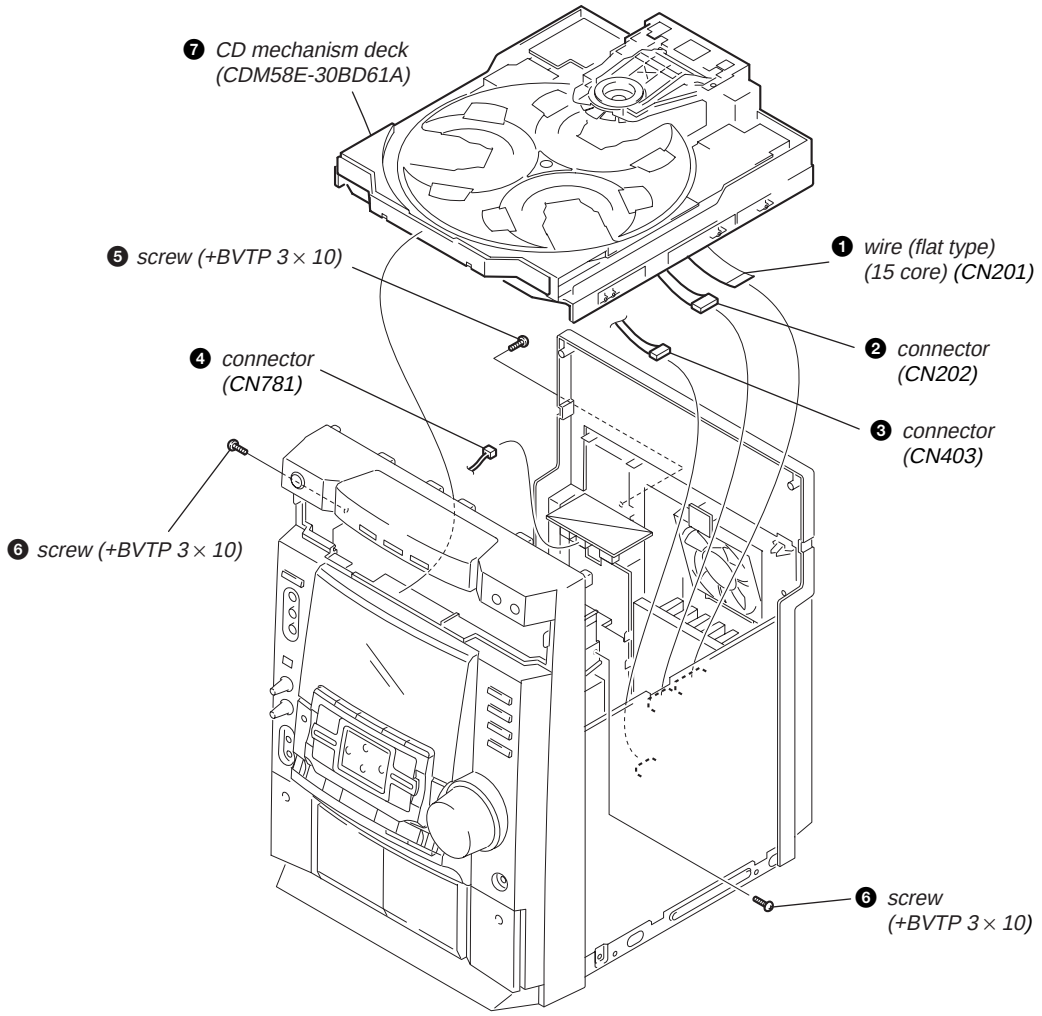

2-5. FRONT PANEL SECTION

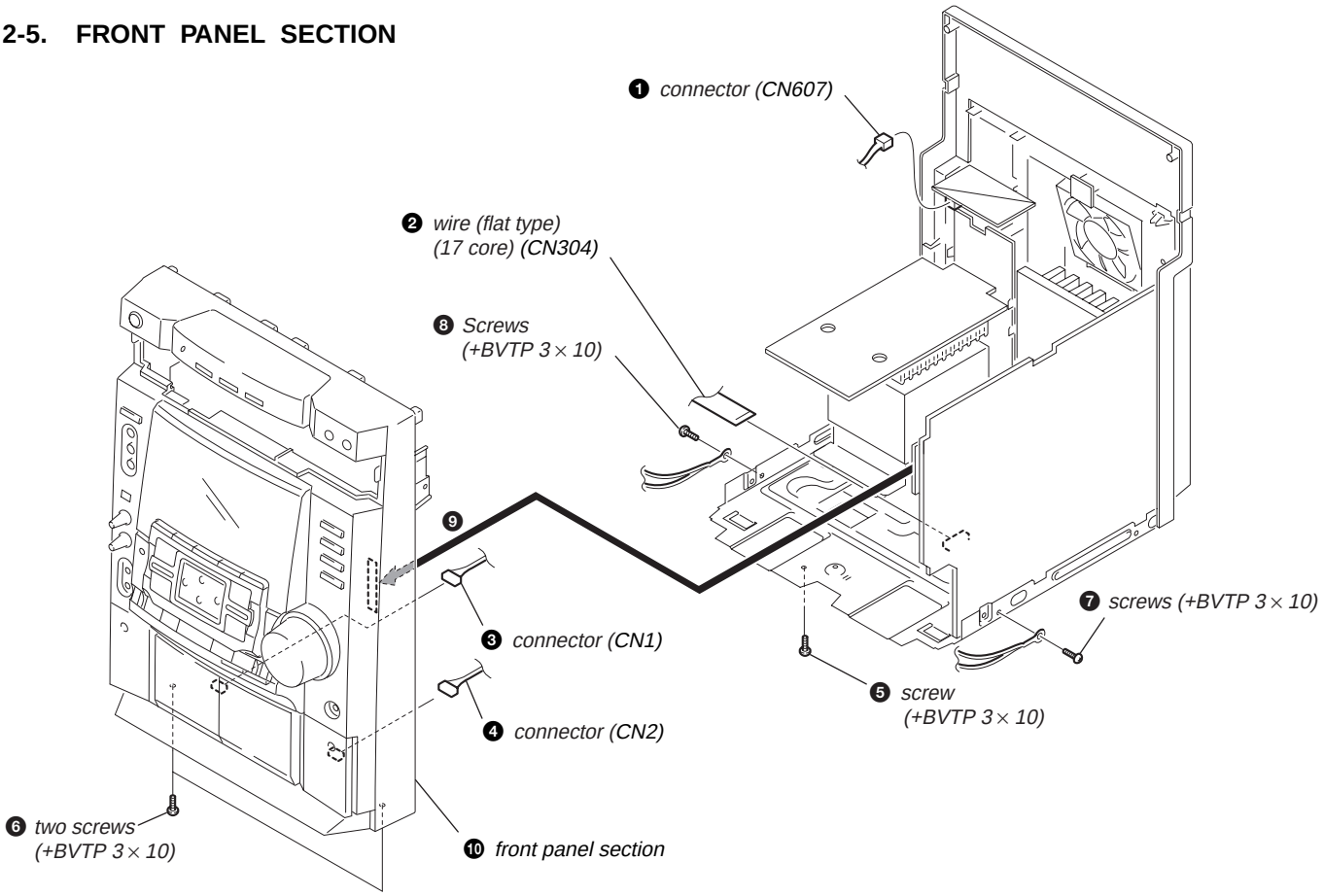

2-6. TAPE MECHANISM DECK (TCM-230AWR41)

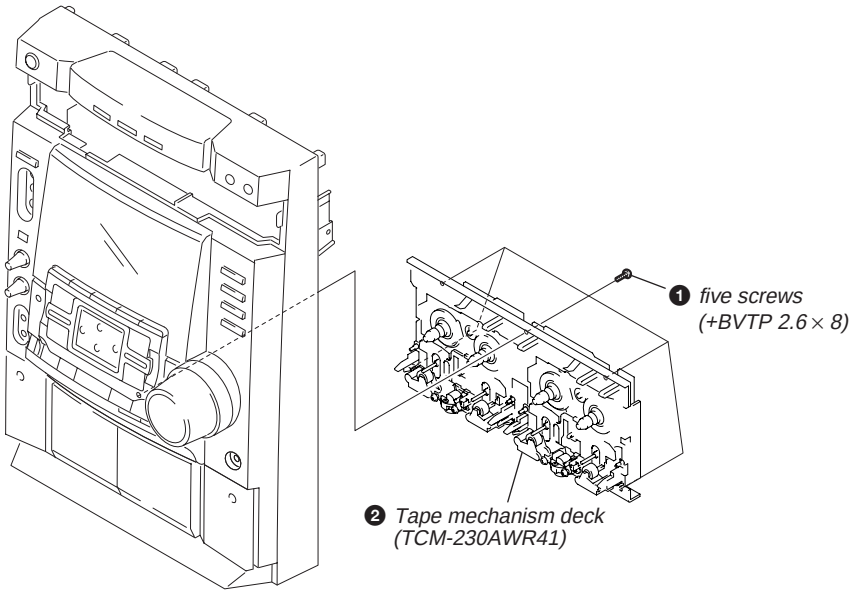

2-7. BACK PANEL SECTION

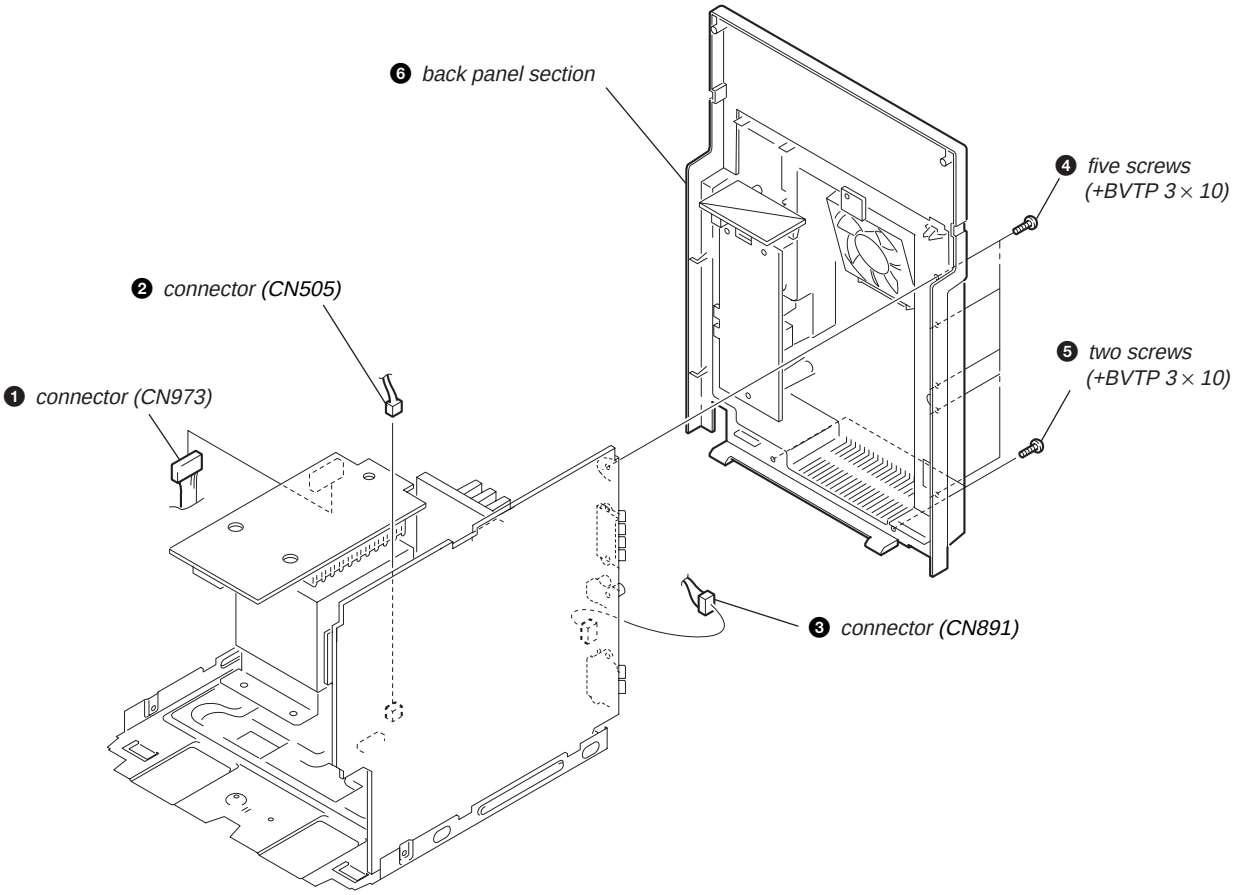

2-8. MAIN BOARD

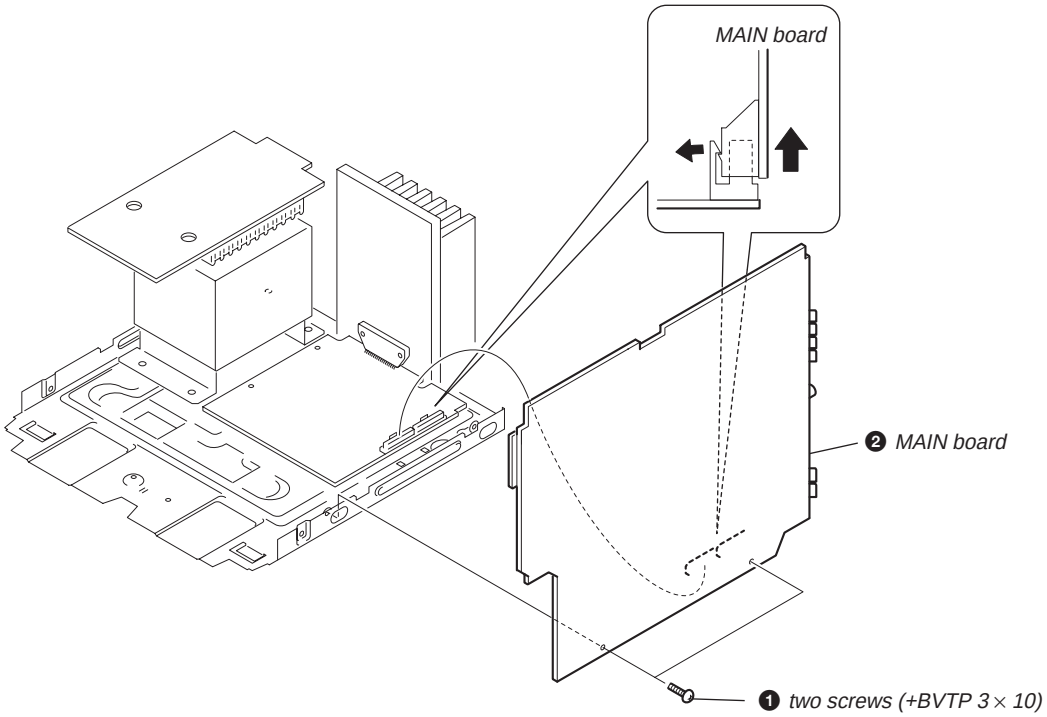

2-9. LEAF SW BOARD, HEAD (A) BOARD, HEAD (B) BOARD

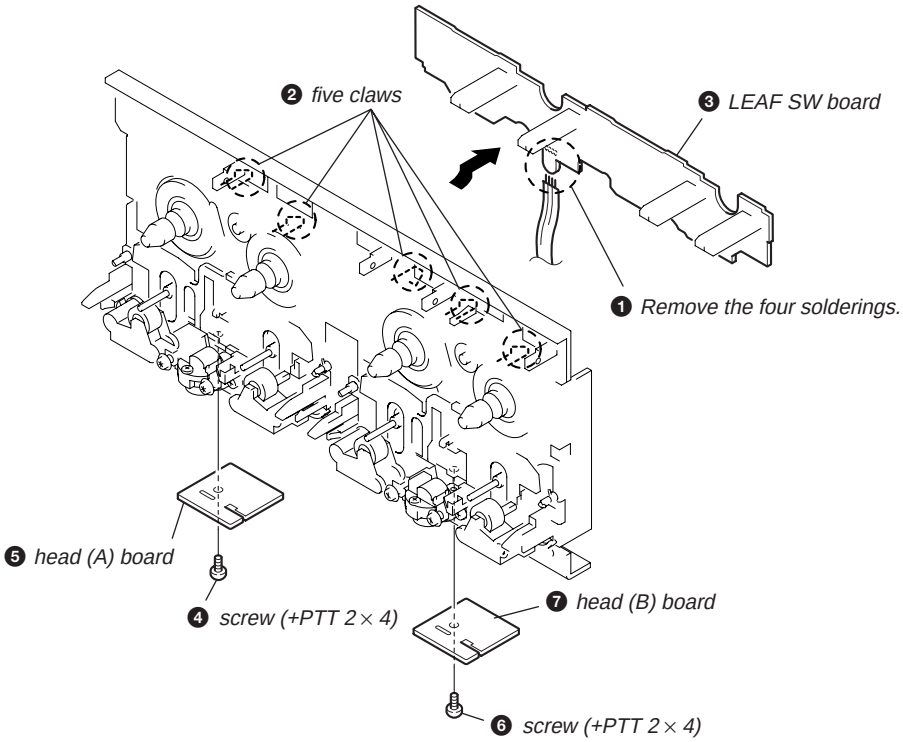

2-10. BASE UNIT (BU-30BD61A)

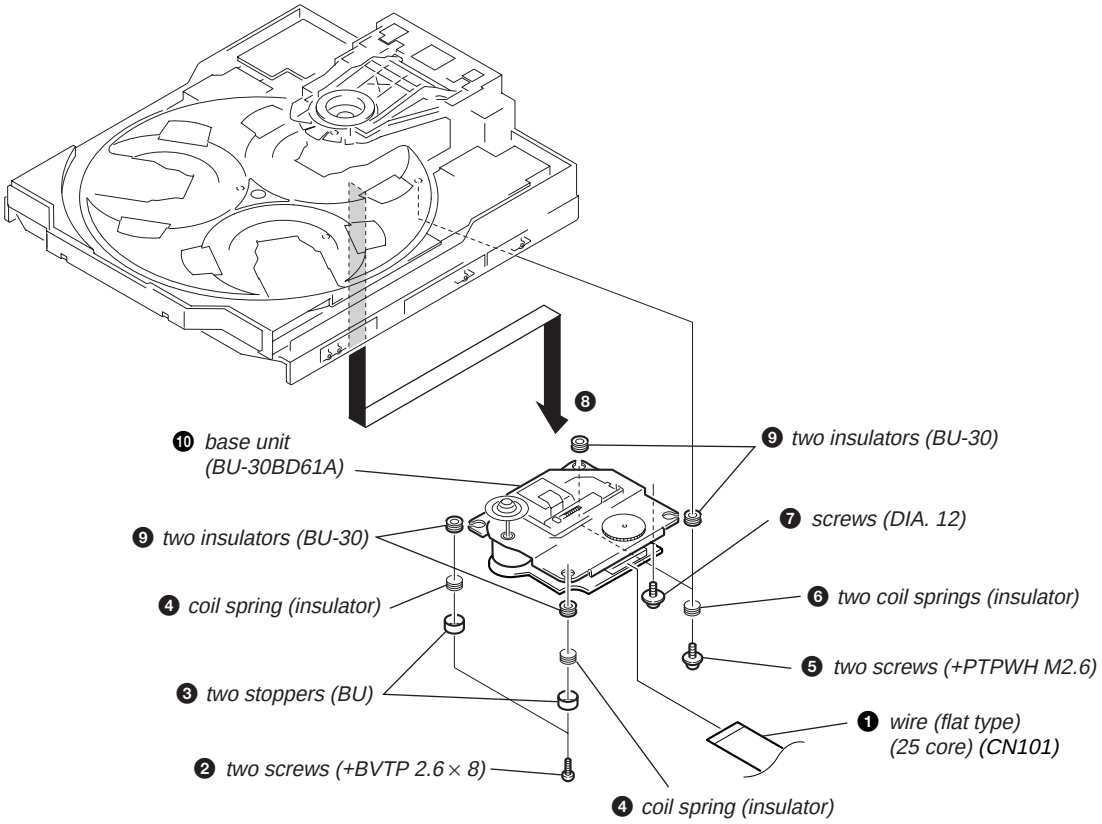

2-11. VIDEO BOARD, DRIVER BOARD

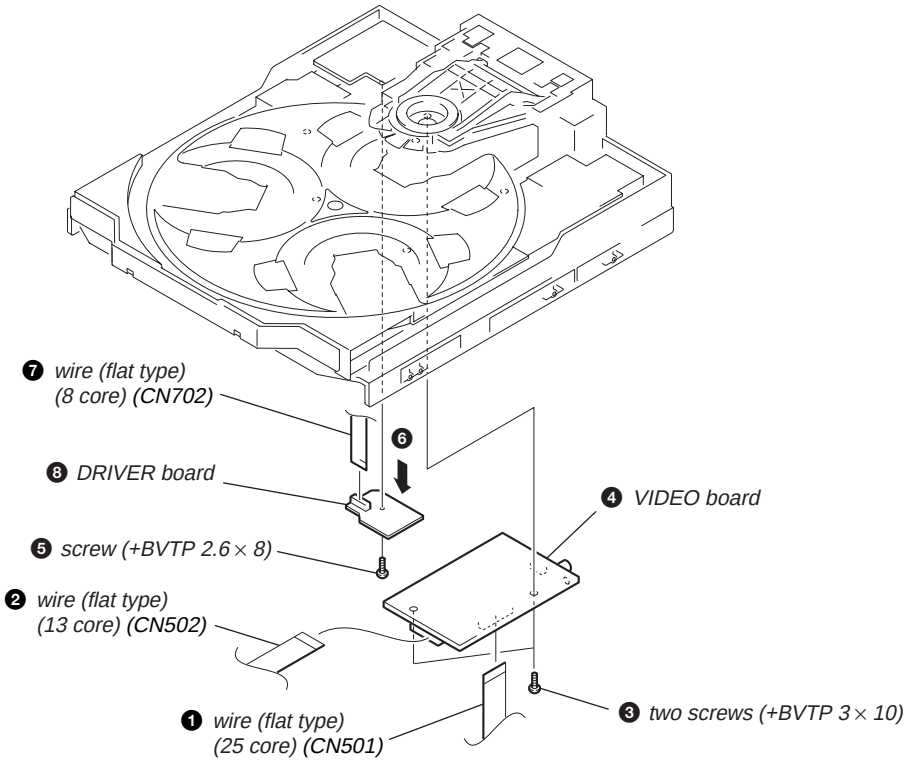

2-12. MOTOR BOARD, ADDRESS SENSOR BOARD

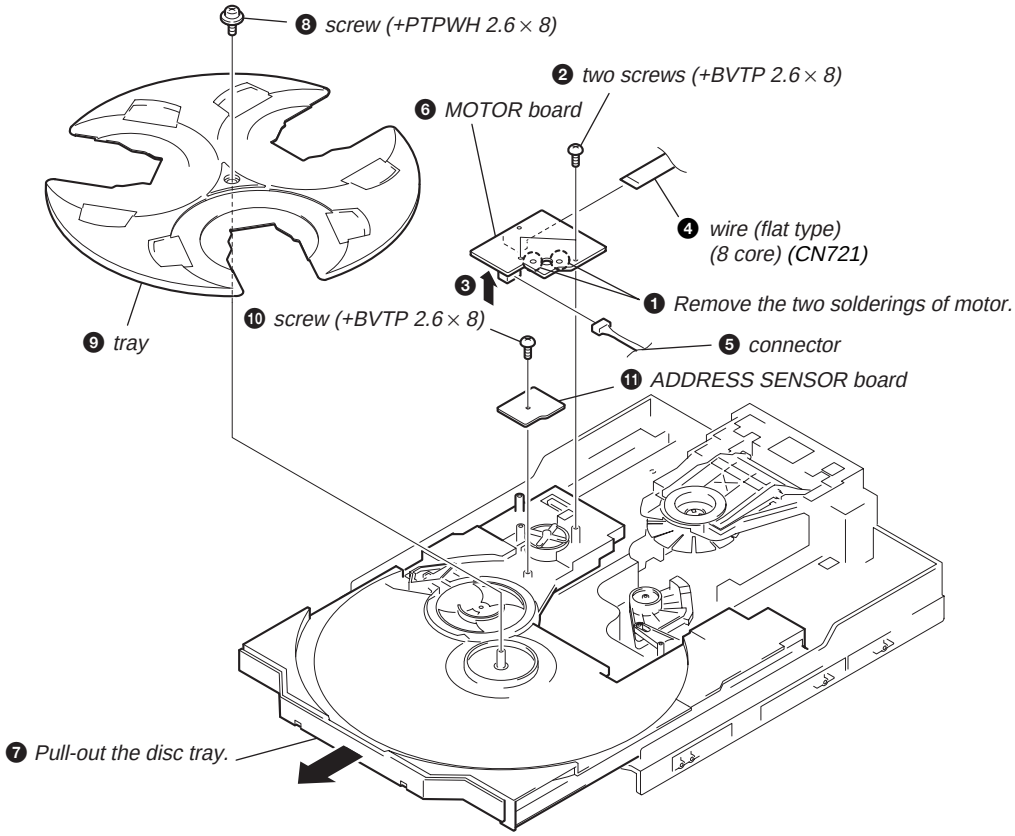

SECTION 3
TEST MODE

[Cold Reset]

- The cold reset clears all data including preset data stored in the RAM to initial conditions. Execute this mode when returning the set to the customer.

Procedure:

1. Press three buttons ■ , ENTER, and I/⏻ simultaneously.
2. The fluorescent indicator tube becomes blank instantaneously, and the set is reset.

[Hot Reset]

- This mode resets the set with the preset data kept stored in the memory. The hot reset mode functions same as if the power cord is plugged in and out.

Procedure:

1. Press three buttons ■ , ENTER , and DISPLAY simultaneously.
2. The fluorescent indicator tube becomes blank instantaneously, and the set is reset.

[Tuner Step Change]

- A step of AM channels can be changed over between 9 kHz and 10 kHz.

Procedure:

1. Press I/⏻ button to turn the set ON.
2. Select the function "TUNER", and press TUNER/BAND button to select the BAND "AM".
3. Press I/⏻ button to turn the set OFF.
4. Press ENTER and I/⏻ buttons simultaneously, and the display of fluorescent indicator tube changes to "AM 9 k STEP" or "AM 10 k STEP", and thus the channel step is changed over.

[Function Change Mode]

- Select either VIDEO or MD of the external FUNCTION input.

Procedure:

1. Turn on the power.
2. Hold down MD (VIDEO) button then press I/⏻ button , and release I/⏻ button first in order not to switch off the set immediately.
   The another function of the previous function is selected , the input level is also changed and displayed " MD " or "VIDEO".

[GC Test Mode]

- This mode is used to check the software version, FL tube, LED, keyboard and VACS.

Procedure:

1. Press three buttons ■ , ENTER , and DISC 2 simultaneously.
2. LEDs and fluorescent indicator tube are all turned on.
3. When you want to enter the software version display mode, press DISC 1. The model number and destination are displayed.
4. Each time DISC 1 is pressed, the display changes starting from MC version, GC version, CD version, CDD version, CDM version, BD version, ST version, TC version, TA version and TM version in this order, and returns to the model number and destination display.
5. When DISC 3 is pressed while the version numbers are being displayed except model number and destination, year, month and day of the software creation appear. When DISC 3 is pressed again, the display returns to the software version display. When DISC 1 is pressed while year, month and day of the software creation are being displayed, the year, month and day of creation of the software versions are displayed in the same order of version display.
6. Press DISC 2 button, and the key check mode is activated.
7. In the key check mode, the fluorescent indicator tube displays "K0 V0". Each time a button is pressed, "KEY" value increases. However, once a button is pressed, it is no longer taken into account.
   "VOL" value increases like 1, 2, 3 ... if rotating VOLUME knob in "+" direction, or it decreases like 0, 9, 8 ... if rotating in "–" direction.
8. Also when DISC 3 is pressed after lighting of all LEDs and FL tubes, value of VACS appears.
9. To exit from this mode, press three buttons in the same manner as step 1, or disconnect the power cord.

[MC Test Mode]

- This mode is used to check operations of the respective sections of Amplifier, Tuner, and Tape.

Procedure:

* To enter MC Test Mode

1. Press the I/⏻ button to turn on the set.
2. Press the three buttons of ■ , ENTER and DISC 3 simultaneously.
3. The messages MUSIC, MOVIE, GAME and P FILE flash on the FL display tube.
   The input FUNCTION is Changed to VIDEO.

* Check of Amplifier

1. When ▲ (CURSOR UP) button is pressed, GEQ increases to its maximum and a message "GEQ MAX" appears.
2. When ▼ (CURSOR DOWN) button is pressed, GEQ decreases to its minimum and a message "GEQ MIN" appears.
3. When ◄ (CURSOR LEFT) or ► (CURSOR RIGHT) button is pressed, GEQ is set to flat and a message "GEQ FLAT" appears.
4. When the VOLUME control knob is turned clockwise even slightly, the sound volume increases to its maximum and a message "VOLUME MAX" appears for two seconds, then the display returns to the original display.
5. When the VOLUME control knob is turned counter-clockwise even slightly, the sound volume decreases to its minimum and a message "VOLUME MIN" appears for two seconds, then the display returns to the original display.

* Check of clock frequency

1. To check the frequency of clock used to run the time in the unit, the clock output is available at pin 39 (IC 501, MASTER CONTROL) only during MC test mode.
2. The frequency is 32.768 kHz or so.

* Tuner function

1. In the test mode, the default-preset channel is called even when the TUNER is selected and an attempt is made to call the preset channel that has been stored in memory. (It means that the memory is cleared.)
2. The minimum, center and maximum frequency of each band is set then.

* Tape function
1. When a tape is inserted in Deck B and recording is started, the input source function selects VIDEO automatically.
   When CD SYNC/HI-DUB button is pressed during Rec in function, ALC is turned on.
2. When ■ button is pressed to stop recording, the Tape (Deck) B is selected and tape is rewound, tape is rewound using ◀◀ button, tape is stops at around the record-starting position and playback of the recorded portion of the tape is started. If PAUSE is inserted even once during recording, tape is rewound to the position around the PAUSE position and is played back.
3. When CD SYNC / HI-DUB button is pressed during playback of Deck B, either normal speed or high speed can be selected by this button.

* AMS Test Mode
1. Set TAPE function
2. Select the desired loop by pressing the PLAY MODE button. Insert a test tape AMS-110A or AMS-120 to Deck A.
3. Press the SPECTRUM button to enter the AMS test mode.
4. After a tape is rewound first, the FF AMS is checked, and the mechanism is shut off after detecting the AMS signal twice.
5. Then the REW AMS is checked and the mechanism is shut off after detecting the AMS signal twice.
6. When the check is complete, a message of either OK or NG appears.

* To return to normal mode again.
1. When you want to exit this mode, press the I/⏻ button.
2. The cold reset is enforced at the same time.

[VACS ON/OFF Mode]
- This mode is used to switch ON and OFF the VACS (Variable Attenuation Control System).

Procedure:
Press the ENTER and SPECTRUM buttons simultaneously. The message “VACS OFF” or “VACS ON” appears.

[CD Aging Mode]
Procedure:
1. Short SL501 by soldering.
2. Turn on the main power. Set a disc on the DISC1 tray. Select CD.
3. Press the SELECT/◁▷ button. The aging mode starts.
4. Aging status appears on the monitor screen.

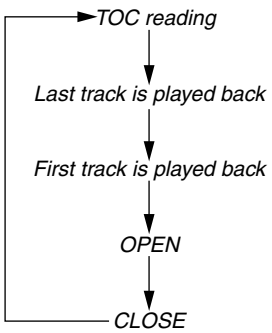

Monitor Display	
1st line	OPEN/CLOSE/CD PLAY display
2nd line	DISC1/DISC1-15/DISC1-1/TIME display
4th line	COUNT : 1 display
5th line	TOTAL ERR : 00 display
6th line	JITTER FF display
3rd line	AGING

How to exit the CD aging mode:
1. Press the I/⏻ and turn off the main power.
2. Remove soldering from SL501.

[Function Change Mode]
Select either VIDEO or MD of the external FUNCTION input.

Procedure:
1. Turn on the power.
2. Press the two buttons ENTER and I/⏻ at the same time.
   The main power is turned on and the other function of the previous function is selected and displayed. “MD” or “VIDEO”.

[VIDEO CD Color-bars Mode]
On this mode, the data of the color-bars signal as a picture signal and the 1 kHz sine wave signal as a sound signal are output by the mechanism controller (IC502) for the video CD signal check. When measurement of the voltage and waveform on the VIDEO board, perform it in this mode.
For reference, the color-bars signal can be observed at CN301 pin ② using an oscilloscope.
Procedure:
1. Short the both ends of the land of SL503 of the VIDEO board.
2. Turn the power on. Press the CD button to select CD.
3. The color-bars appears when the CD is in stop status, and it disappears when the CD goes in play status.
4. After measuring, remove the lead wire connected.VIDEO board (SIDE B)

[CD Servo ON/OFF Mode]
Procedure:
1. Short SL502 on the VIDEO board by soldering.
2. Turn on the main power. Set a disc on the DISC1 tray. Select CD.
3. Press the ◁▷ button to play back CD.
4. When the ▶▶I + button is pressed, 100 track jump is executed.
5. Also, every pressing of the PLAY MODE button triggers between ON and OFF of TRACKING SERVO and SLED SERVO.

How to quit the CD servo ON/OFF mode:
1. Press the I/⏻ button to turn off the main power.
2. Remove soldering from SL502.

[VIDEO BOARD] (SIDE A)

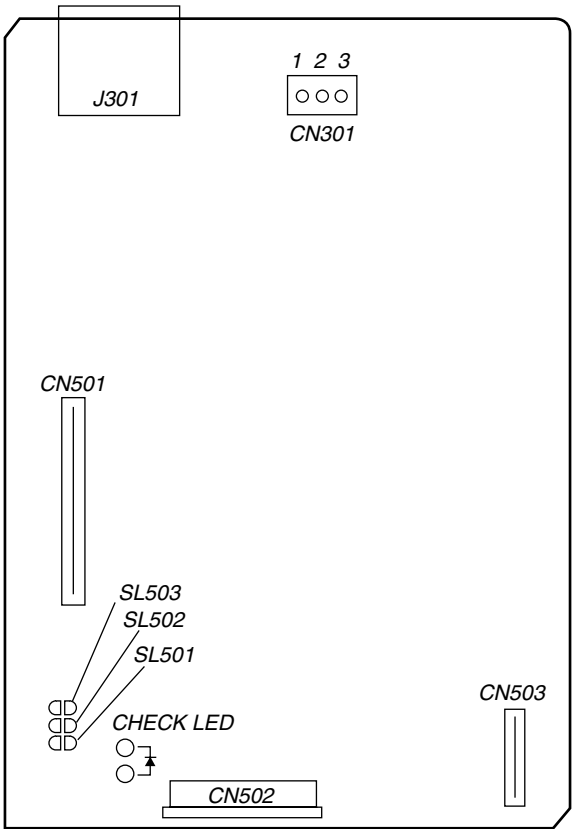

SECTION 4
MECHANICAL ADJUSTMENTS

Precaution

1. Clean the following parts with a denatured alcohol-moistened swab:
   record/playback heads — pinch rollers
   erase head — rubber belts
   capstan — idlers
2. Demagnetize the record/playback head with a head demagnetizer.
3. Do not use a magnetized screwdriver for the adjustments.
4. After the adjustments, apply suitable locking compound to the parts adjusted.
5. The adjustments should be performed with the rated power supply voltage unless otherwise noted.

Torque Measurement

Mode	Torque meter	Meter reading
FWD	CQ-102C	3.06 N • m to 6.96 N • m 31 to 71 g • cm (0.43 – 0.98 oz • inch)
FWD back tension	CQ-102C	0.19 N • m to 0.58 N • m 2 to 6 g • cm (0.02 – 0.08 oz • inch)
REV	CQ-102RC	3.06 N • m to 6.96 N • m 31 to 71 g • cm (0.43 – 0.98 oz • inch)
REV back tension	CQ-102RC	0.19 N • m to 0.58 N • m 2 to 6 g • cm (0.02 – 0.08 oz • inch)
FF/REW	CQ-201B	6.96 N • m to 14.02 N • m 71 to 143 g • cm (0.98 – 1.99 oz • inch)
FWD tension	CQ-403A	9.80 N • m 100 g or more (3.53 oz or more)
REV tension	CQ-403R	9.80 N • m 100 g or more (3.53 oz or more)

SECTION 5
ELECTRICAL ADJUSTMENTS

DECK SECTION 0 dB=0.775 V

1. Demagnetize the record/playback head with a head demagnetizer.
2. Do not use a magnetized screwdriver for the adjustments.
3. After the adjustments, apply suitable locking compound to the parts adjust.
4. The adjustments should be performed with the rated power supply voltage unless otherwise noted.
5. The adjustments should be performed in the order given in this service manual. (As a general rule, playback circuit adjustment should be completed before performing recording circuit adjustment.)
6. The adjustments should be performed for both L-CH and R-CH.
7. Switches and controls should be set as follows unless otherwise specified.

• Test Tape

Tape	Signal	Used for
P-4-A100	10 kHz, –10 dB	Azimuth Adjustment
WS-48B	3 kHz, 0 dB	Tape Speed Adjustment
P-4-L300J	315 Hz, 0 dB	Level Adjustment

Record/Playback Head Azimuth Adjustment

DECK A **DECK B**

Note: Perform this adjustments for both decks

Procedure:

1. Mode: Playback

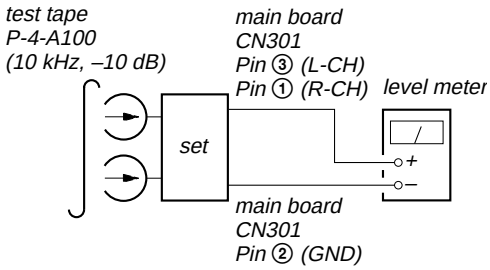

2. Turn the adjustment screw and check output peaks. If the peaks do not match for L-CH and R-CH, turn the adjustment screw so that outputs match within 1dB of peak.

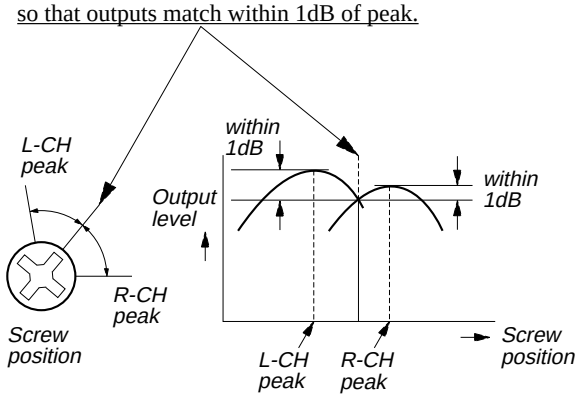

3. Mode: Playback

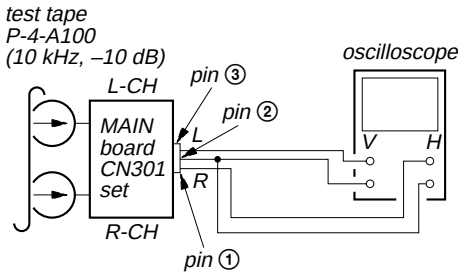

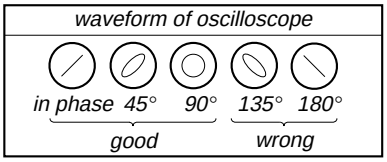

4. After the adjustments, apply suitable locking compound to the pats adjusted.

Adjustment Location: Playback Head (Deck A).
Record/Playback/Erase Head (Deck B).

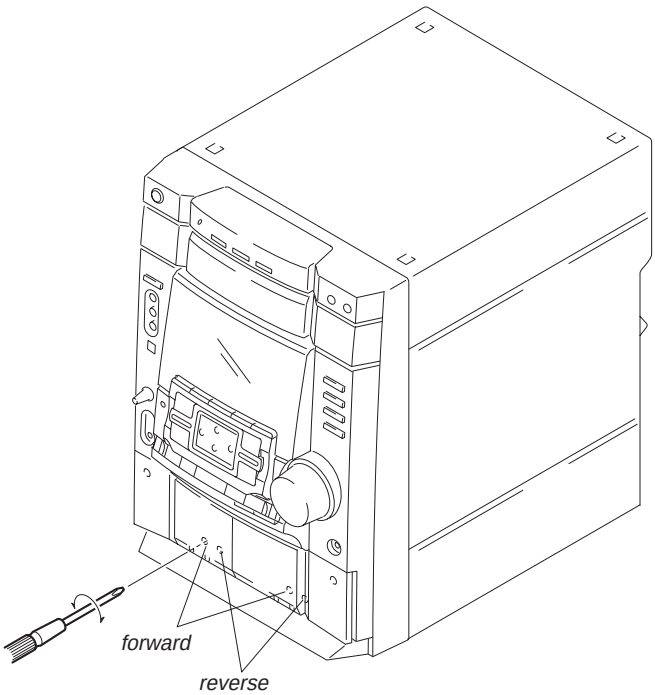

Tape Speed Adjustment DECK B

Note: Start the Tape Speed adjustment as below after setting to the test mode.
In the test mode, the tape speed is high during pressing the CD SYNC/HI-DUB button.

Procedure:

1. Turn the power switch on.
2. Press the ■ button, ENTER button and DISC 3 button simultaneously.
   (The "TEST MODE" on the fluorescent indicator tube display while in the test mode.)
   To exit from the test mode, press the I/⏻ button.

Mode: Playback

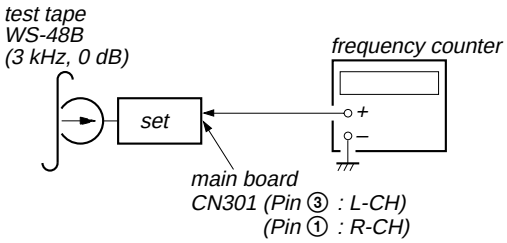

1. Insert the WS-48B into the deck B.
2. Press the ◁▷ button on the deck B.
3. Press the CD SYNC/HI-DUB button in playback mode.
   Then at HIGH speed mode.
4. Adjust RV1001 on the LEAF SW board so that frequency counter reads 6,000 ± 30 Hz.
5. Press the CD SYNC/HI-DUB button.
   Then back to NORMAL speed mode.
6. Adjust RV1002 on the LEAF SW board so that frequency counter reads 3,000 ± 15 Hz.

Adjustment Location: LEAF SW board

Playback level Adjustment DECK A DECK B

Procedure:

Mode: Playback

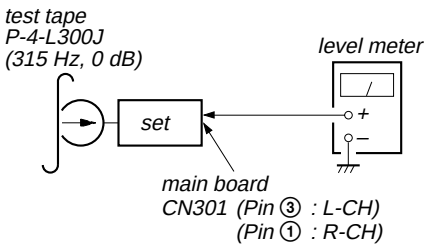

1. Confirm that level difference between the channels is with ± 0.5 dB.
2. After check, adjust the following RVs.
   Deck A is RV302 (L-CH), Deck B is RV303 (L-CH) so that adjustment within adjustment level as follows.

Adjustment Level:

CN301 PB level: 334.4 to 748.7 mV (–7.3 to –0.3 dB)

Adjustment Location: MAIN board

Sample Volue of Wow and Flutter: 0.3% or less W. RMS (WS-48B)

REC Bias Adjustment DECK B

Procedure:

In the MC test mode, the "REC memory mode" is convenient for this adjustment. In the "REC memory mode" , when the REC starts the input signal FUNCTION is switched to VIDEO automatically. When the REC stops, the tape returns near to the recording start position.

1. Press MD (VIDEO) button to select VIDEO. (This step is not necessary if the above test mode has already been set.)
2. Insert a tape into deck B.
3. After press REC PAUSE/START button, press REC PAUSE/START button, then recording start.
4. Mode: Record

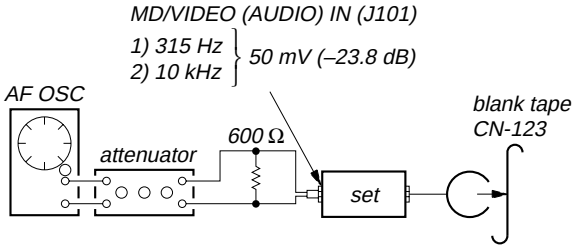

5. Mode: Playback

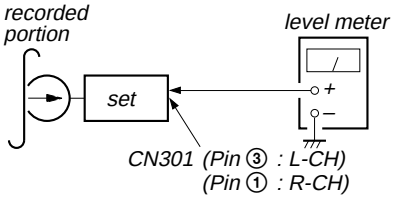

6. Confirm the playback signal recorded in step 3 becomes adjustable level as follows.
   If these levels are not adjustable level, adjust the RV304 (L-CH) and RV354 (R-CH) on the MAIN board to repeat steps 4 and 5.

Adjustable level: Playback output of 315 Hz to playback output of 10 kHz: ±1.0 dB

Adjustment Location: MAIN board

REC Level Adjustment DECK B

Procedure:

In the MC test mode, the "REC memory mode" is convenient for this adjustment. In the "REC memory mode" , when the REC starts the input signal FUNCTION is switched to VIDEO automatically. When the REC stops, the tape returns near to the recording start position.

1. Press MD (VIDEO) button to select VIDEO. (This step is not necessary if the above test mode has already been set.)
2. Insert a tape into deck B.
3. After press REC PAUSE/START button, press REC PAUSE/START button, then recording start.
4. Mode: Record

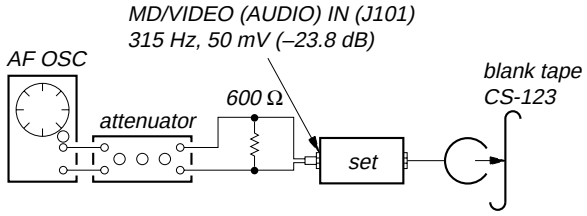

5. Mode: Playback

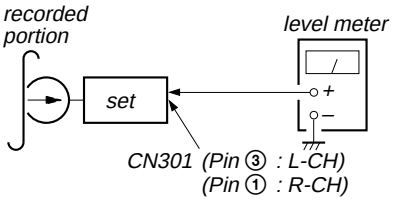

6. Confirm the play back signal recorded in step 3 becomes adjustable level as follows.
   If these levels are not adjustable level, adjust the RV301 (L-CH) and RV351 (R-CH) on the MAIN board to repeat steps 4 and 5.

Adjustable level:

CN301 PB level: 47.2 to 53.0 mV (–24.3 to –23.3 dB)

Adjustment Location: MAIN board

[MAIN BOARD] (Component Side)

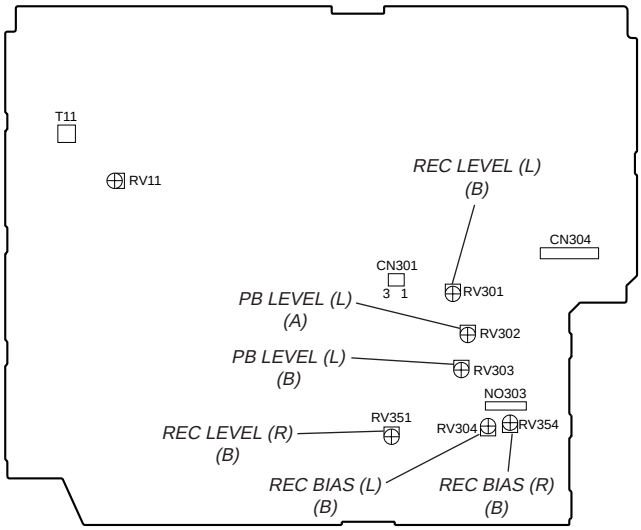

[LEAF SW BOARD] (Component Side)

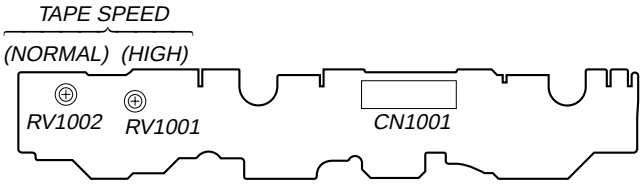

TUNER SECTION

FM Tuned Level Adjustment

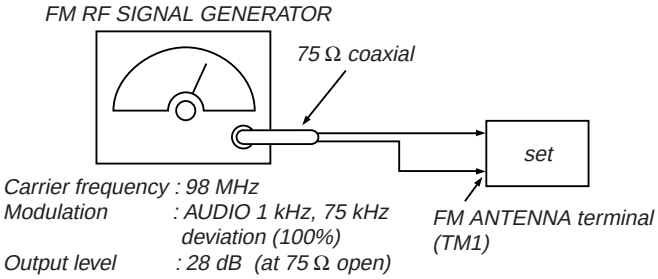

Procedure:
1. Supply a 98 MHz signal at 28 dB from the ANTENNA terminal.
2. Tune the set to 98 MHz.
3. Adjust RV11 to the point (moment) when the TUNED indicator will change from going off to going on.

Adjustment Location: MAIN board

Null Adjustment

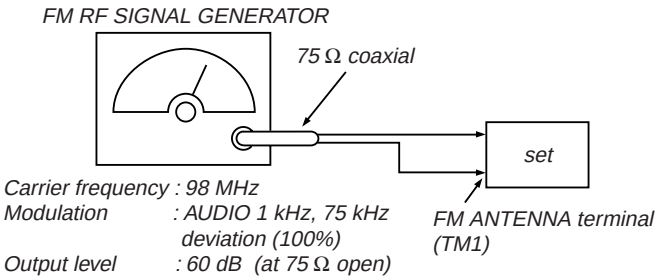

Procedure:
1. Supply a 98 MHz signal at 60 dB from the ANTENNA terminal.
2. Tune the set to 98 MHz.
3. Measure voltage between pin 22 and pin 3 of IC11. Adjust T11 until the voltage becomes 0 V.

Adjustment Location: MAIN board

Adjustment Location

[MAIN BOARD] (Component Side)

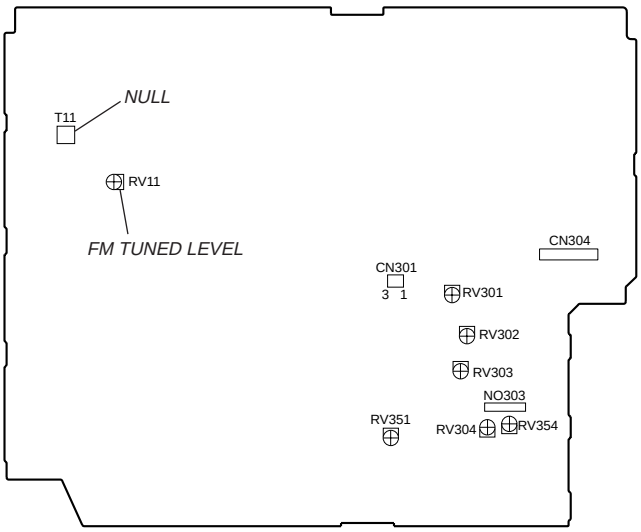

CD SECTION

Note :
1. CD Block is basically designed to operate without adjustment. Therefore, check each item in order given.
2. Use YEDS-18 disc (3-702-101-01) unless otherwise indicated.
3. Use an oscilloscope with more than 10MΩ impedance.
4. Clean the object lens by an applicator with neutral detergent when the signal level is low than specified value with the following checks.

S-Curve Check

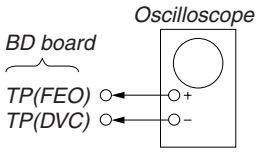

Procedure :
1. Connect oscilloscope to TP (FEO).
2. Connect between TP (FEI) and TP (VC) by lead wire.
3. Turn Power switch on.
4. Load a disc (YEDS-18) and actuate the focus search. (In consequence of open and close the disc tray, actuate the focus search)
5. Confirm that the oscilloscope waveform (S-curve) is symmetrical between A and B. And confirm peak to peak level within 4 ±1 Vp-p.

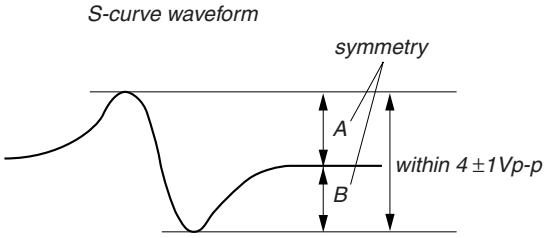

7. After check, remove the lead wire connected in step 2.

Note :
- Try to measure several times to make sure than the ratio of A : B or B : A is more than 10 : 7.
- Take sweep time as long as possible and light up the brightness to obtain best waveform.

RF Level Check

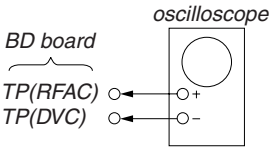

Procedure :
1. Connect oscilloscope to TP (RFAC).
2. Turned Power switch on.
3. Load a disc (YEDS-18) and playback.
4. Confirm that oscilloscope waveform is clear and check RF signal level is correct or not.
5. Measure the RFDC in the same way.

Note: Clear RF signal waveform means that the shape "◊" can be clearly distinguished at the center of the waveform.

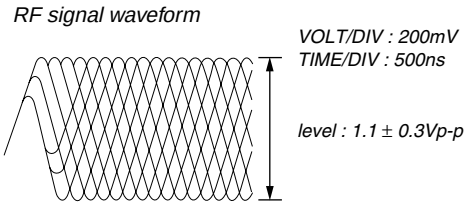

E-F Balance (1 Track jump) Check

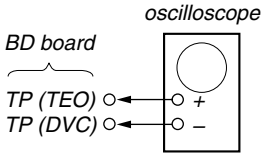

Procedure:

1. Connect an oscilloscope to TP (TEO) and TP (DVC).
2. Turned Power switch on.
3. Load a disc (YEDS-18) and playback the number five track.
4. Press the ▶II button. (Becomes the 1track jump mode.)
5. Confirm that the level B and A (DC voltage) on the oscilloscope waveform.

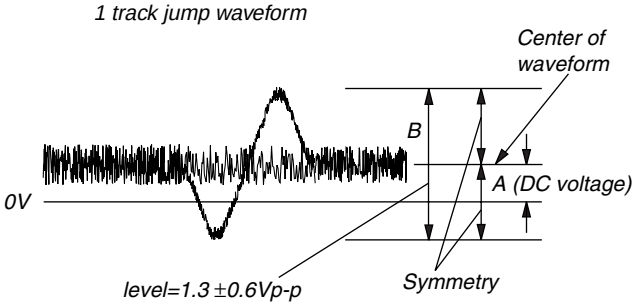

Specification level: $\frac{A}{B}$ x 100=less than ±22%

6. After check, remove the lead wire connected in step 1.

RF PLL Free-run Frequency

Procedure :

1. Connect frequency counter to test point (XPCK) with lead wire.

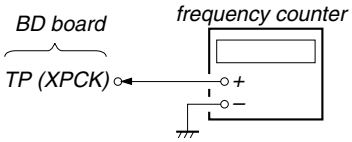

2. Turned Power switch on.
3. Put the disc (YEDS-18) in to play the number five track. Confirm that reading on frequency counter is 4.3218MHz.

Adjustment Location :

[BD BOARD] — SIDE B —

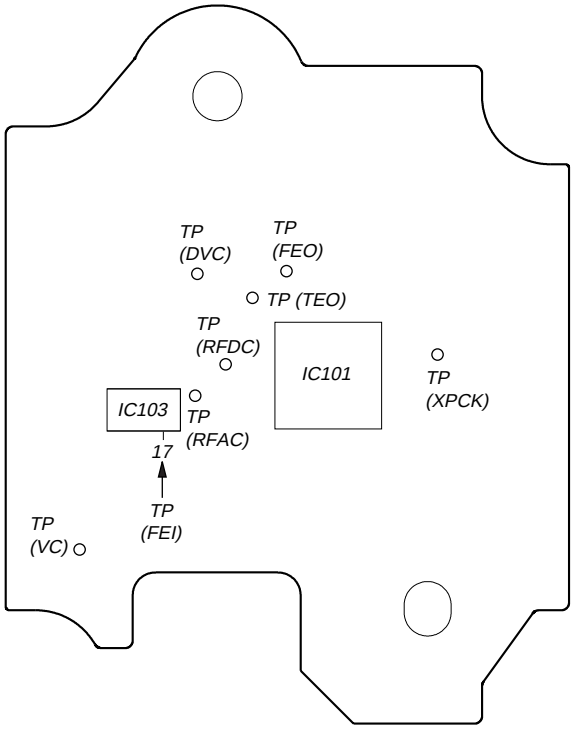

VIDEO SECTION

Frequency Adjustment

Connection:

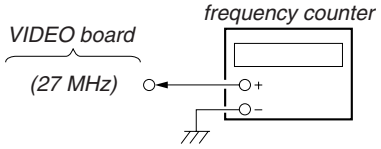

Procedure:

1. Connect the frequency counter to check point of the VIDEO board.
2. Turned power switch on.
3. Press the CD button to select the CD.
4. Adjust CT503 on the VIDEO board so that the frequency counter reading 27.0 MHz ± 80 Hz at stop status.

Adjustment Location:

[VIDEO BOARD] (SIDE A)

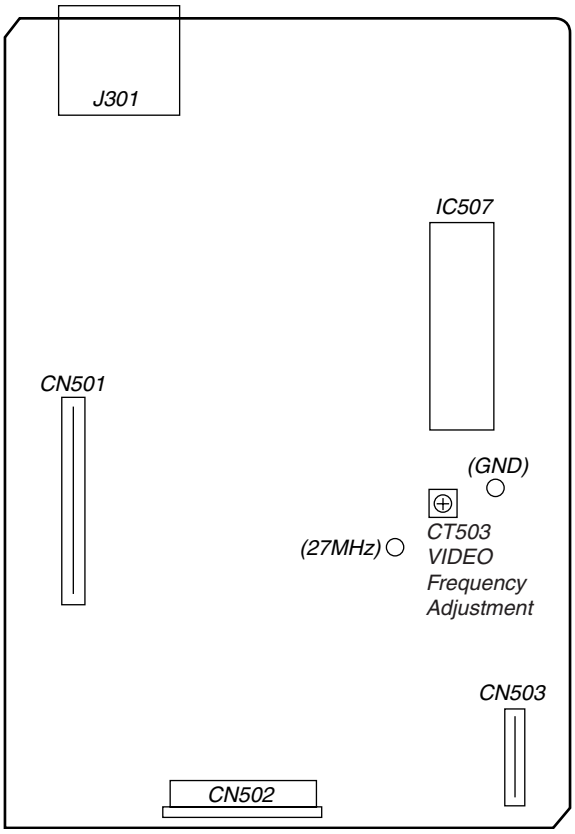

SECTION 6
DIAGRAMS

6-1. BLOCK DIAGRAM – TUNER/CD Section –

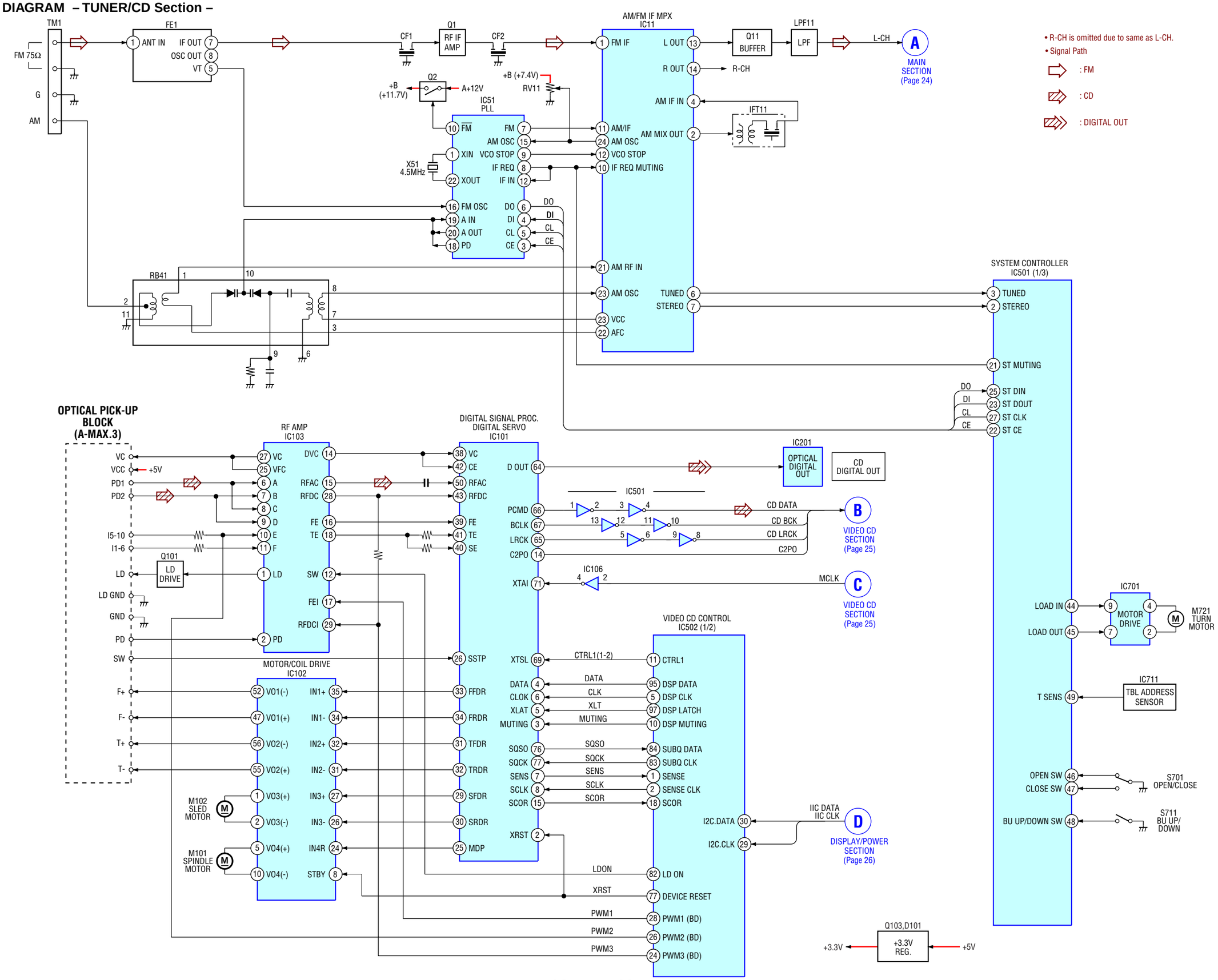

6-2. BLOCK DIAGRAM – MAIN Section –

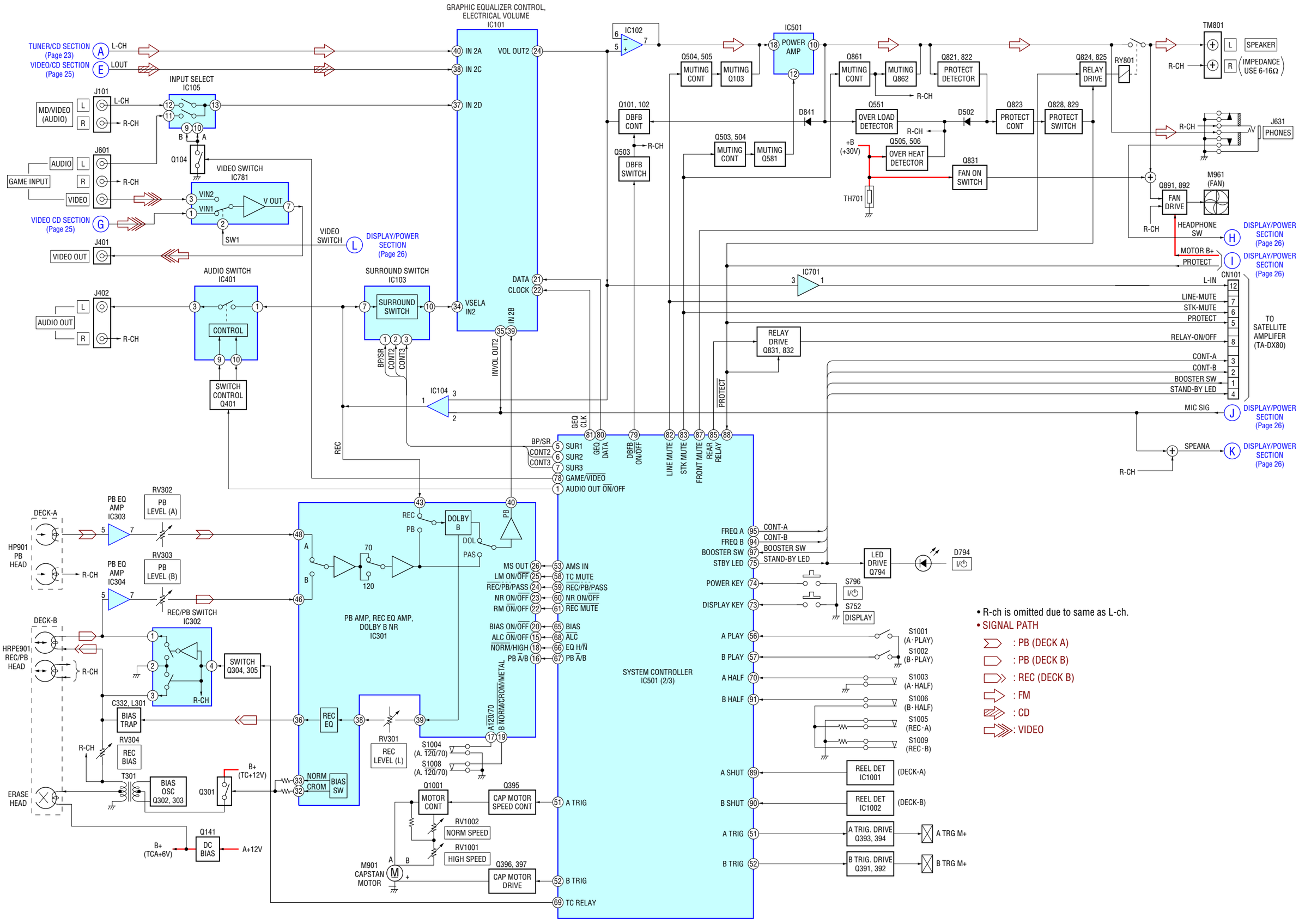

6-3. BLOCK DIAGRAM – DISPLAY/POWER Section –

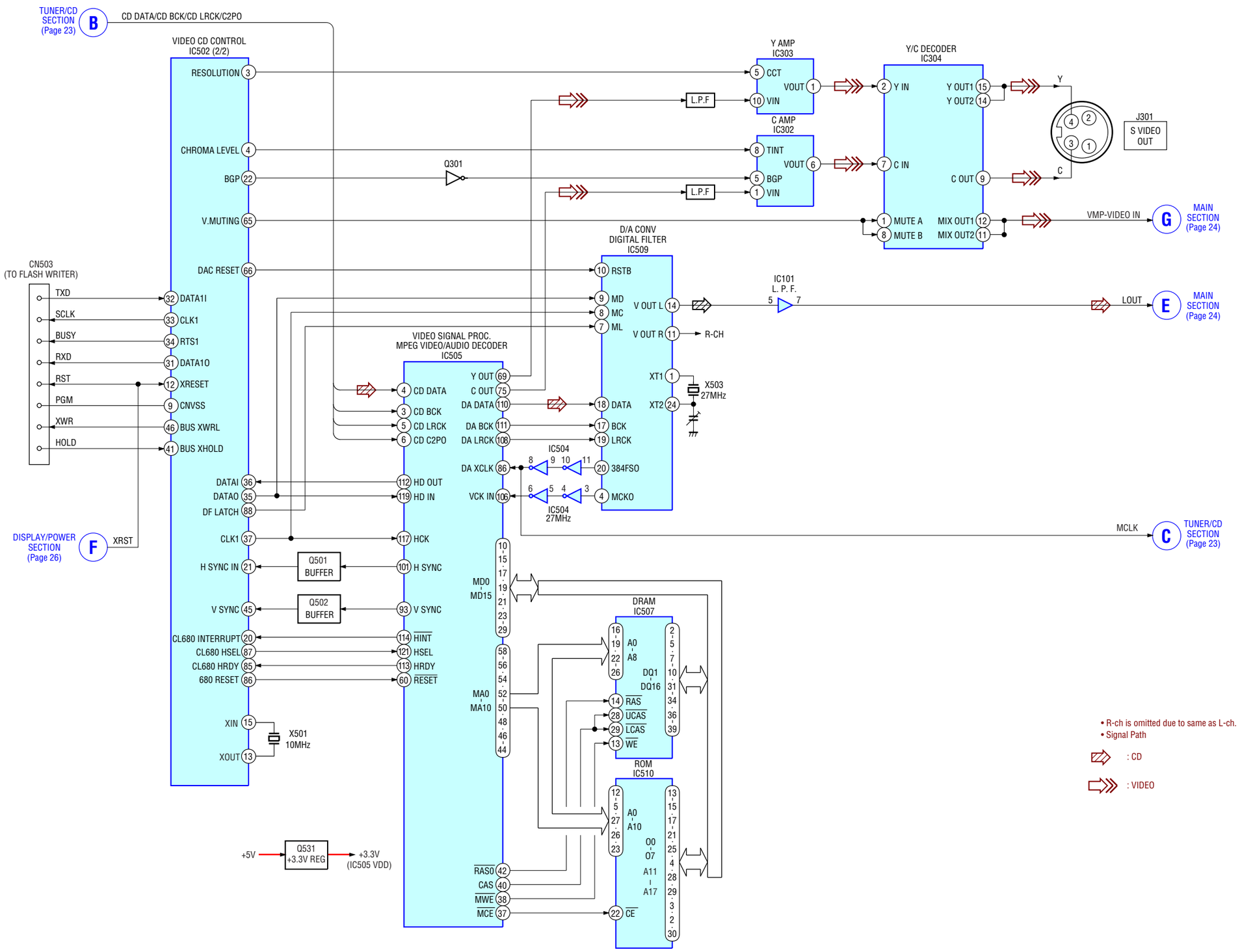

6-4. BLOCK DIAGRAM – VIDEO CD Section –

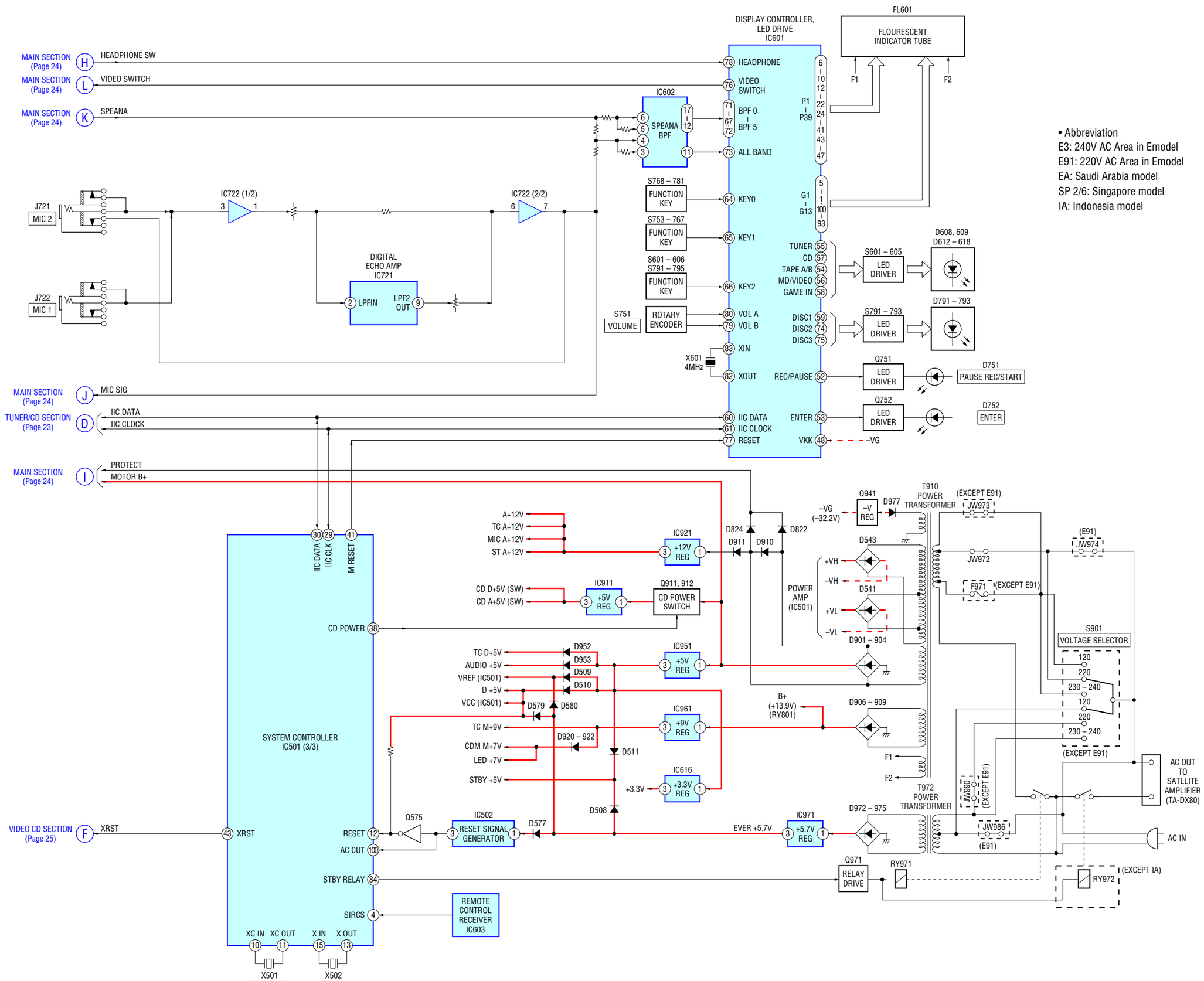

• Abbreviation
E3: 240V AC Area in Emodel
E91: 220V AC Area in Emodel
EA: Saudi Arabia model
SP 2/6: Singapore model
IA: Indonesia model

6-5. NOTE FOR PRINTED WIRING BOARDS AND SCHEMATIC DIAGRAMS
(In addition to this, the necessary note is printed in each block)

Note on Printed Wiring Boards:
- ○——— : parts extracted from the component side.
- ▬ : Pattern from the side which enables seeing.
- indication of transistor.

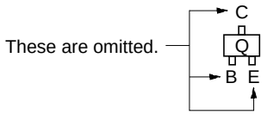

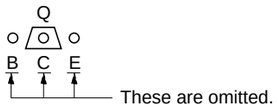

Note on Schematic Diagram:
- All capacitors are in µF unless otherwise noted. pF: µµF 50 WV or less are not indicated except for electrolytics and tantalums.
- All resistors are in Ω and 1/4 W or less unless otherwise specified.
- △ : internal component.
- ▭ : panel designation.

Note: The components identified by mark ⚠ or dotted line with mark ⚠ are critical for safety.
Replace only with part number specified.

- ▬ : B+ Line.
- ▬ ▬ ▬ : B– Line.
- ▭ : adjustment for repair.
- Voltages and waveforms are dc with respect to ground under no-signal (detuned) conditions.
- Voltages are taken with a VOM (Input impedance 10 MΩ). Voltage variations may be noted due to normal production tolerances.
- Waveforms are taken with a oscilloscope. Voltage variations may be noted due to normal production tolerances.
- Circled numbers refer to waveforms.
- Signal path.
  - ⇨ : FM
  - ➡ : AM
  - : PB (DECK A)
  - : PB (DECK B)
  - : REC (DECK B)
  - : CD
  - : digital out
  - : VIDEO
- Abbreviation

E3	: 240 V AC Area in E model
E91	: 220 V AC Area in E model
EA	: Saudi Arabia model
IA	: Indonesia model
SP2/6	: Malaysia, Singapore model

- **Circuit Boards Location**

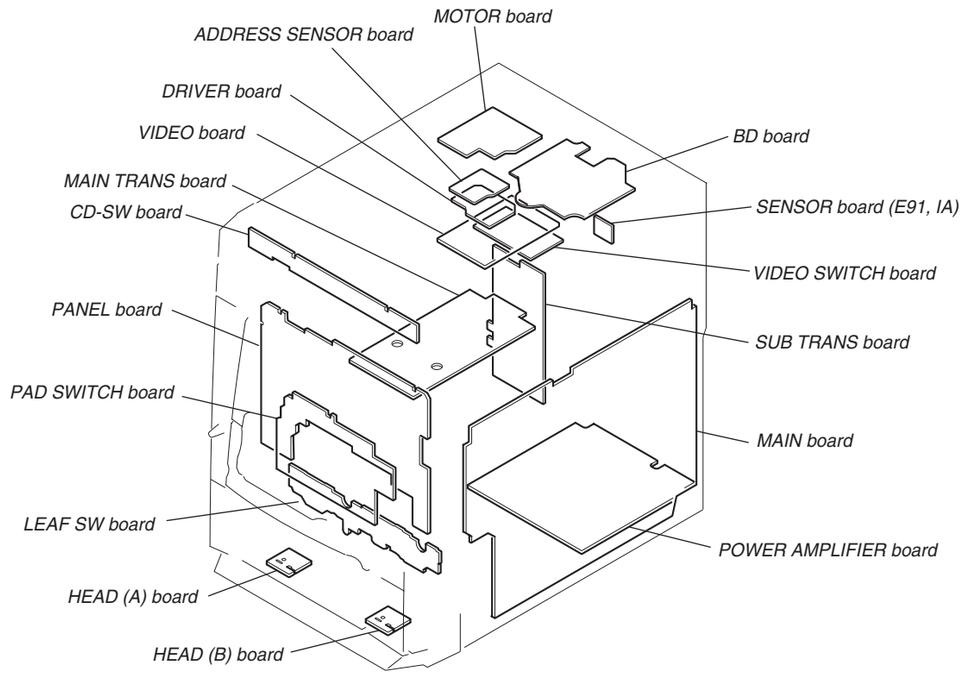

6-6. SCHEMATIC DIAGRAM – BD Board –

• See page 50 for Waveforms. • See page 51 for IC Block Diagrams.

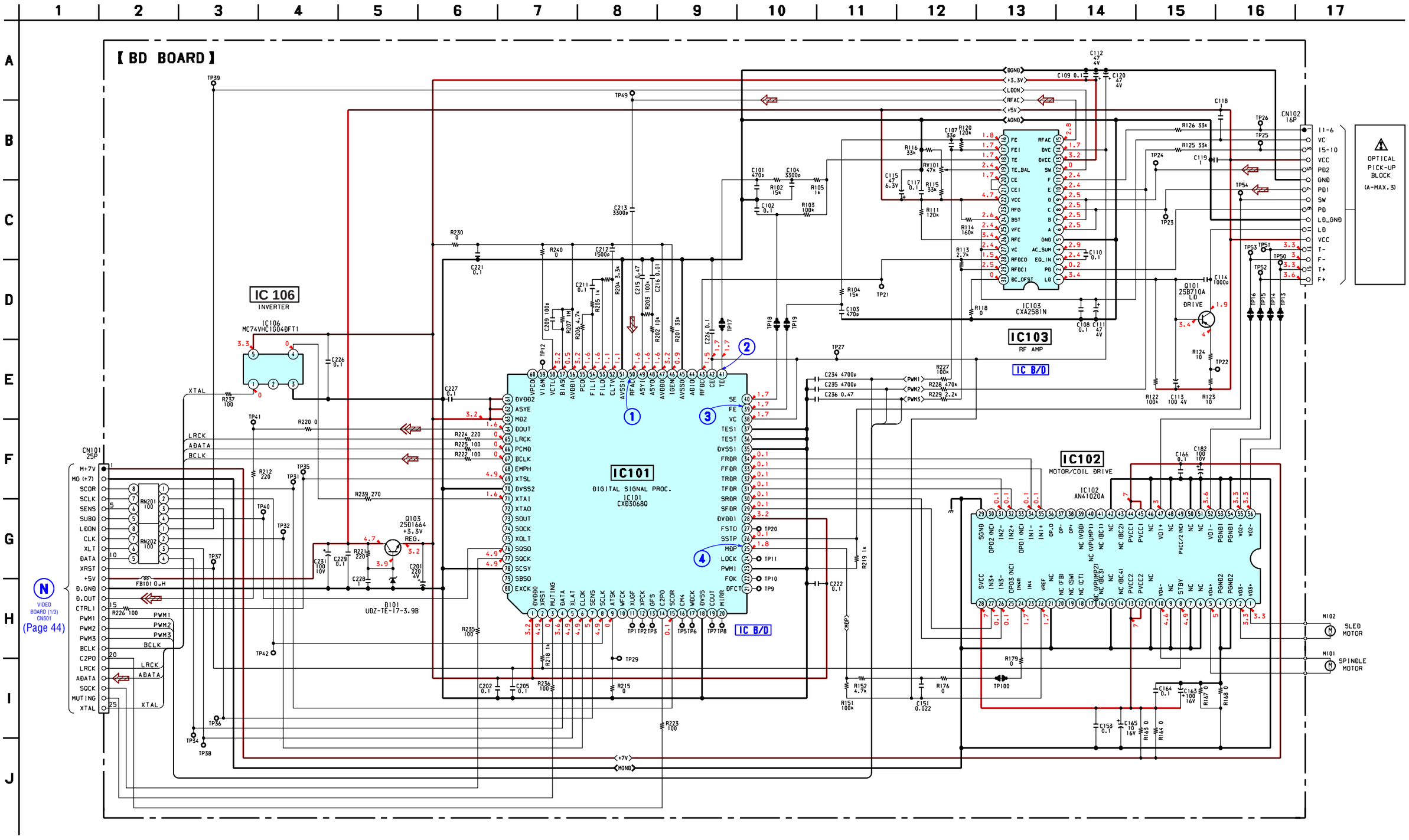

6-7. PRINTED WIRING BOARD – BD Board – • See page 27 for Circuit Boards Location.

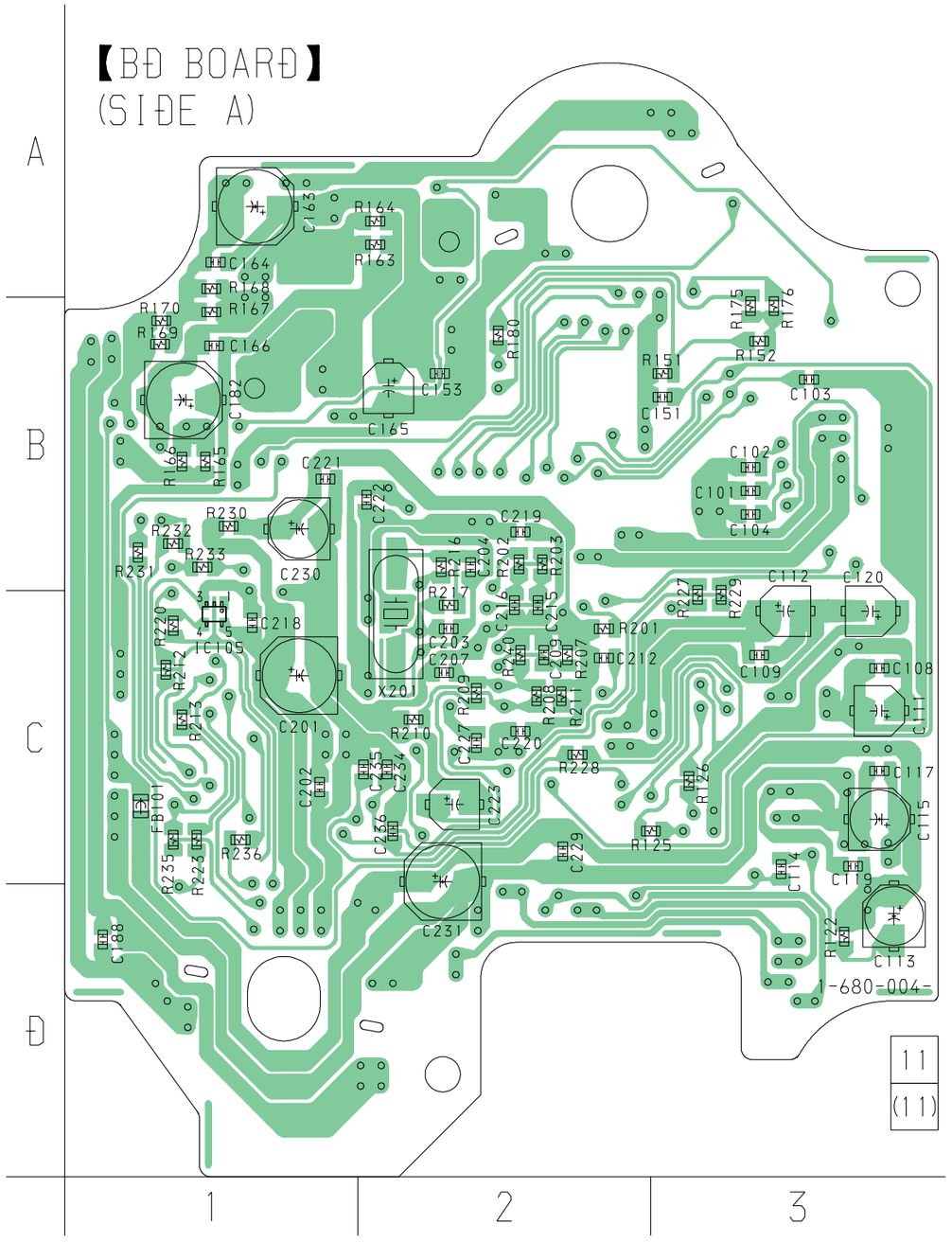

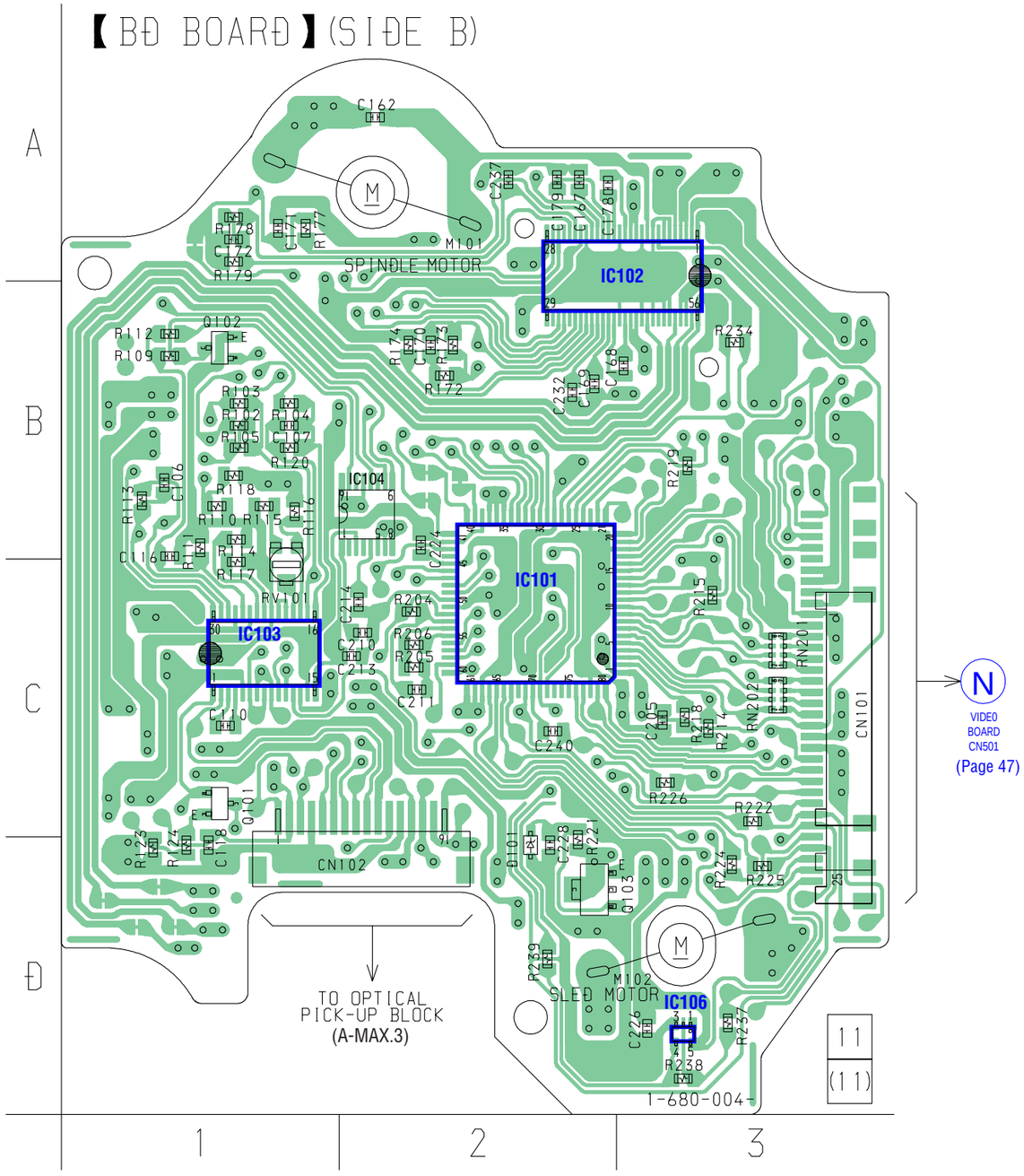

There are a few cases that the part printed on this diagram isn't mounted in this model.

- **Semiconductor Location**

Ref. No.	Location
D101	D-2
IC101	C-2
IC102	A-3
IC103	C-1
IC106	D-3
Q101	C-1
Q103	D-3

29

6-8. SCHEMATIC DIAGRAM – MAIN Board (1/4) –

• See page 50 for Wavefoms. • See page 51 for IC Block Diagram.

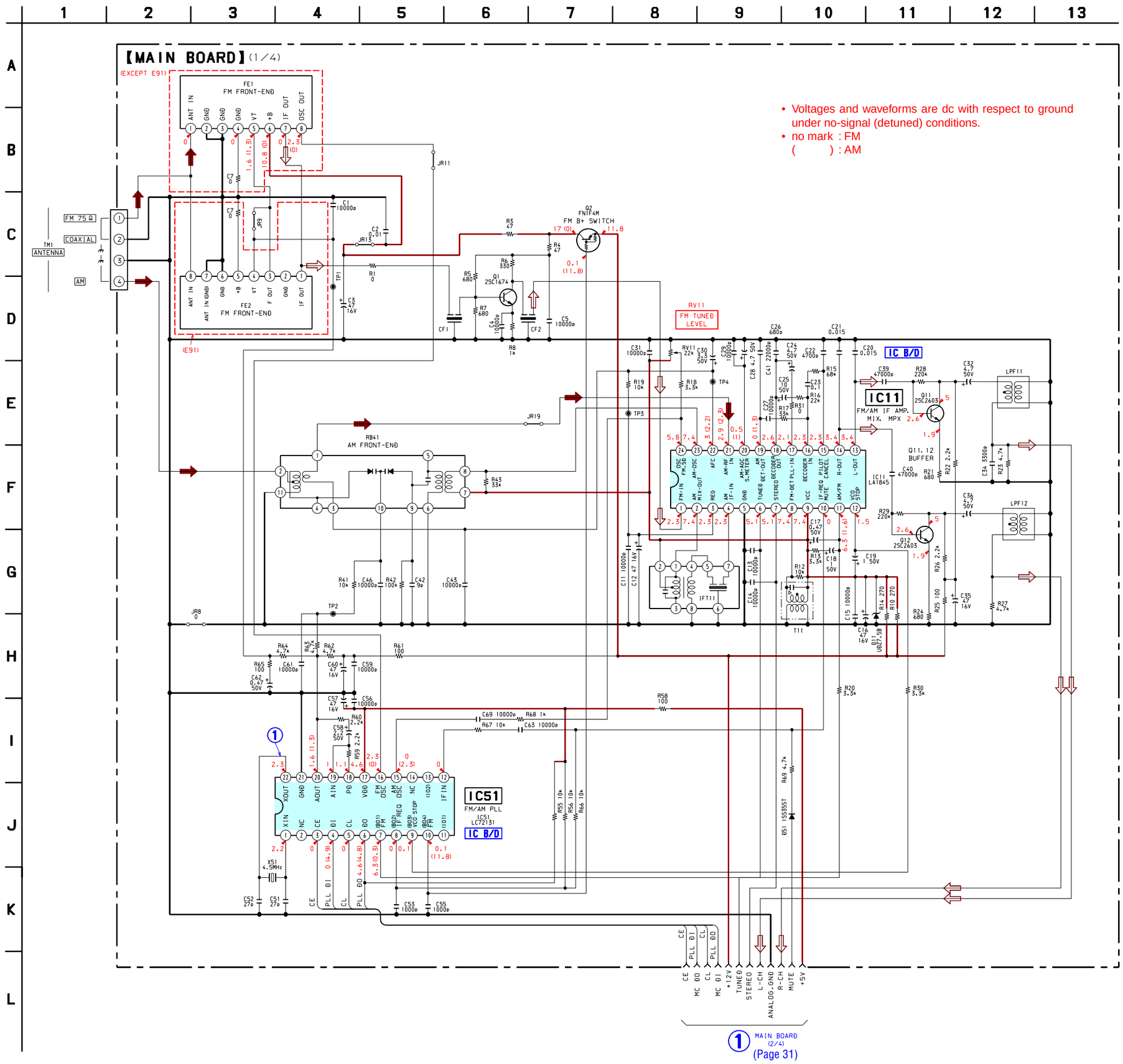

6-9. SCHEMATIC DIAGRAM – MAIN Board (2/4) –

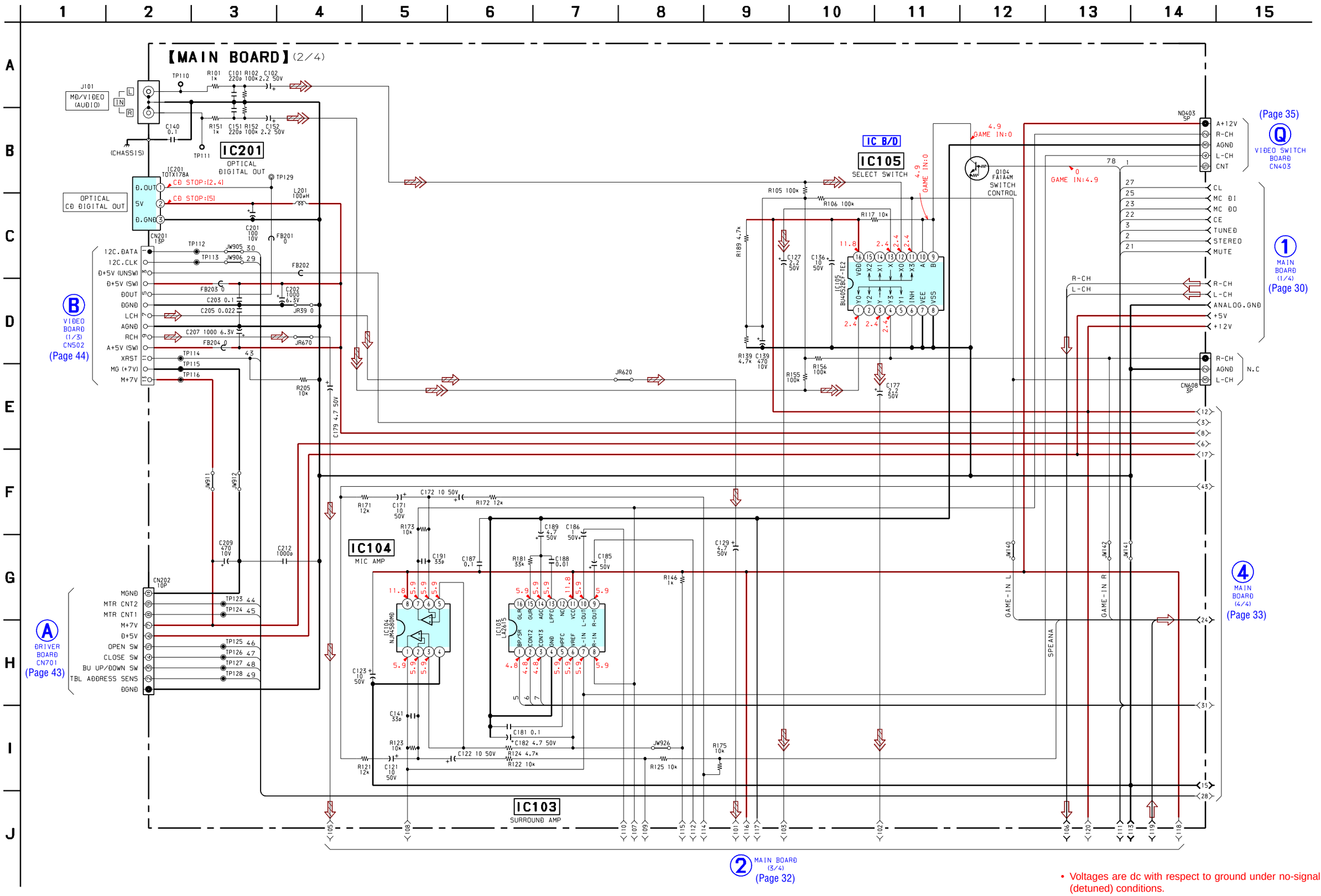

- Voltages are dc with respect to ground under no-signal (detuned) conditions.
  no mark : FM
  ( ) : TAPE
  [ ] : CD

6-10. SCHEMATIC DIAGRAM – MAIN (3/4)/HEAD Board –

• See page 50 for Waveforms. • See page 51 for IC Block Diagrams. • See page 35 for Printed Wiring Board of Head Boards.

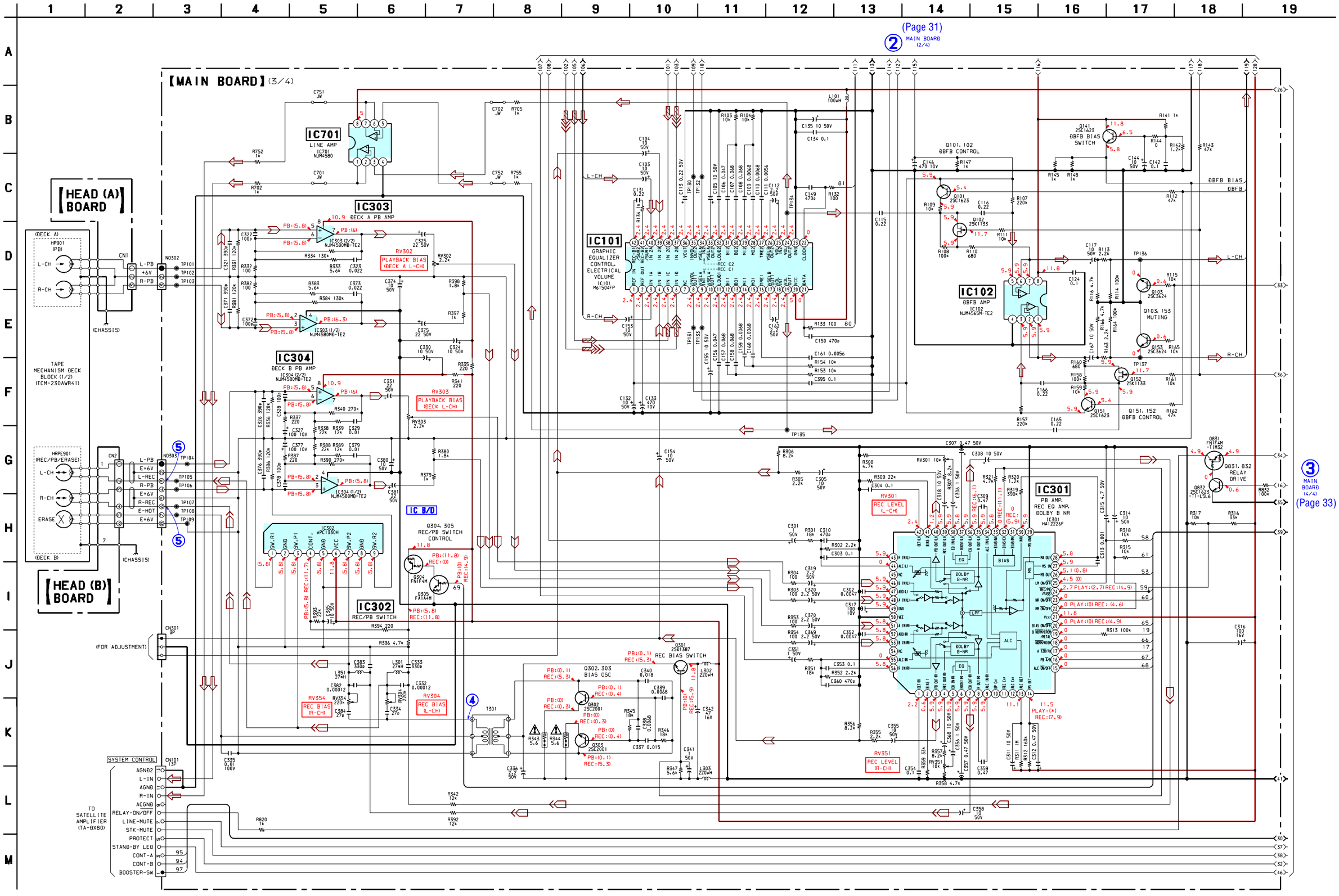

• Voltages and waveforms are dc with respect to ground under no-signal (detuned) conditions.
no mark : FM
( ) : TAPE
[ ] : CD

The components identified by mark ⚠ or dotted line with mark ⚠ are critical for safety.
Replace only with part number specified.

6-11. SCHEMATIC DIAGRAM – MAIN Board (4/4) –

• See page 50 for Waveforms. • See page 55 for IC Pin Function Description.

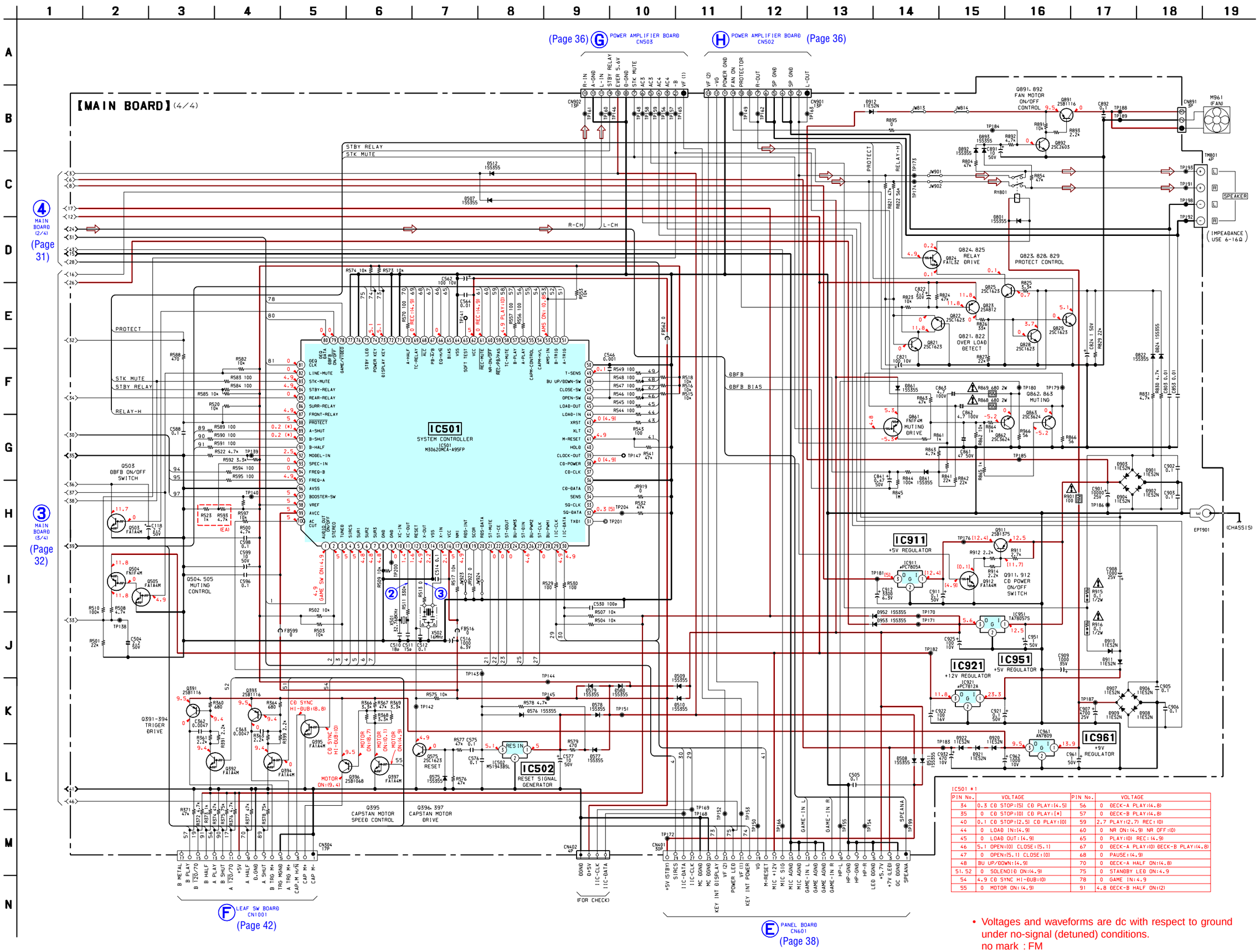

[IC501 *]

PIN No.	VOLTAGE	PIN No.	VOLTAGE
34	0.3 CD STOP:(5) CD PLAY:(4.5)	56	0 DECK-A PLAY:(4.8)
35	0 CD STOP:(0) CD PLAY:(*)	57	0 DECK-B PLAY:(4.8)
40	0.1 CD STOP:(2.5) CD PLAY:(0)	59	2.7 PLAY:(2.7) REC:(0)
44	0 LOAD IN:(4.9)	60	0 NR ON:(4.9) NR OFF:(0)
45	0 LOAD OUT:(4.9)	65	0 PLAY:(0) REC:(4.9)
46	5.1 OPEN:(0) CLOSE:(5.1)	67	0 DECK-A PLAY:(0) DECK-B PLAY:(4.8)
47	0 OPEN:(5.1) CLOSE:(0)	68	0 PAUSE:(4.9)
48	BU UP/DOWN:(4.9)	70	0 DECK-A HALF ON:(4.8)
51, 52	0 SOLENOID ON:(4.9)	75	0 STANDBY LED ON:4.9
54	4.9 CD SYNC HI-DUB:(0)	78	0 GAME IN:4.9
55	0 MOTOR ON:(4.9)	91	4.8 DECK-B HALF ON:(2)

- Voltages and waveforms are dc with respect to ground under no-signal (detuned) conditions.
  no mark : FM
  ( ) : TAPE
  [ ] : CD

6-12. PRINTED WIRING BOARD – MAIN Board – • See page 27 for Circuit Boards Location.

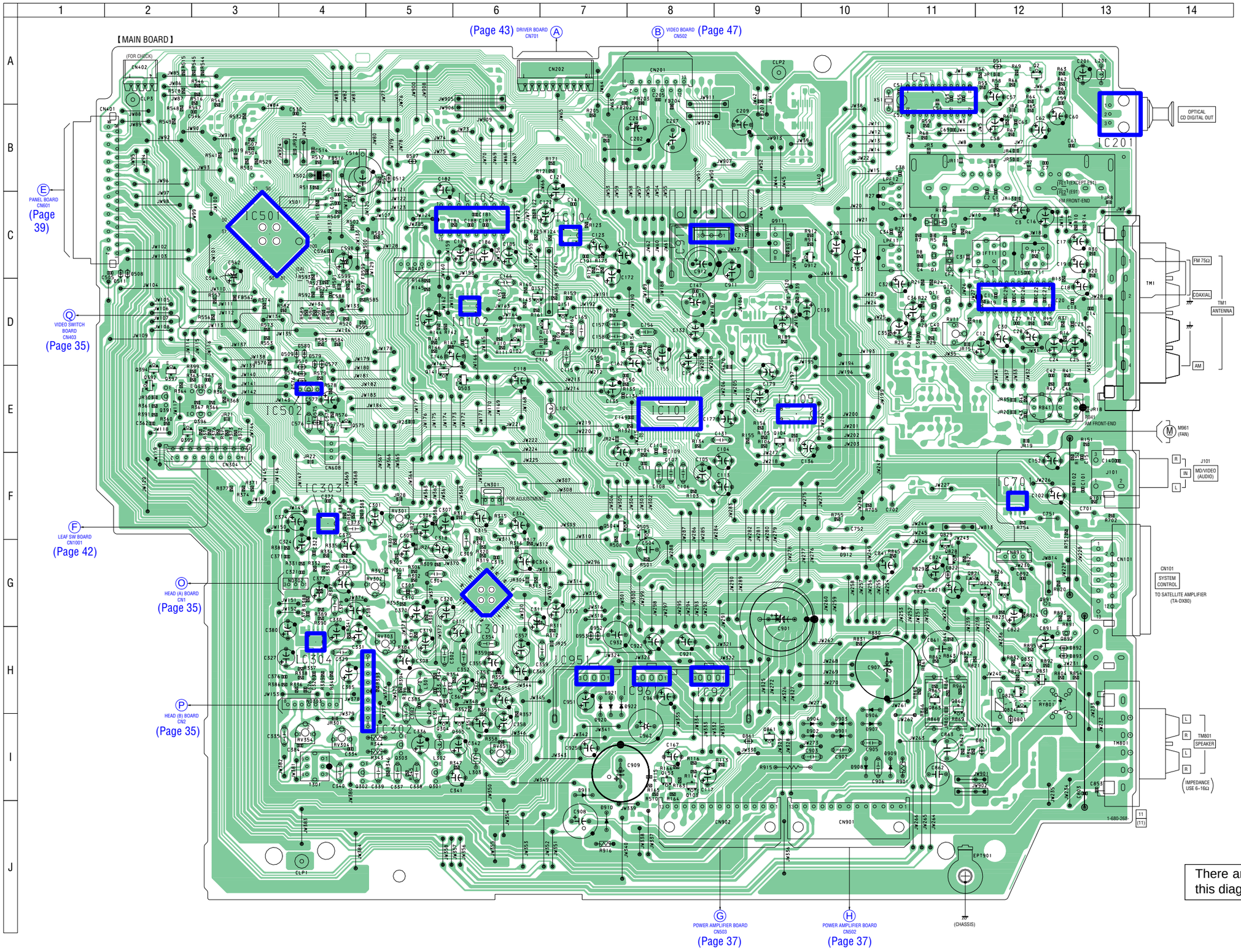

• **Semiconductor Location**

Ref. No.	Location	Ref. No.	Location
D51	A-12	IC701	F-12
D507	B-5	IC911	C-8
D508	C-2	IC921	H-8
D509	D-4	IC951	H-7
D510	E-4	IC961	H-8
D511	C-2		
D512	B-5	Q1	C-11
D575	E-4	Q2	A-12
D576	E-4	Q11	D-11
D577	D-4	Q12	D-11
D578	E-4	Q101	D-7
D579	D-4	Q102	D-6
D580	D-4	Q103	I-8
D801	I-12	Q104	E-9
D822	G-11	Q141	E-5
D824	G-11	Q151	D-7
D841	I-12	Q152	D-6
D861	I-9	Q153	I-8
D892	H-13	Q301	I-5
D893	H-13	Q302	I-4
D901	I-10	Q303	I-5
D902	I-10	Q304	I-5
D903	I-10	Q305	I-6
D904	I-10	Q391	E-2
D906	H-10	Q392	E-2
D907	I-10	Q393	E-3
D908	I-10	Q394	E-2
D909	I-11	Q395	E-2
D910	J-7	Q396	E-3
D911	I-7	Q397	E-2
D912	G-10	Q503	E-6
D920	H-7	Q504	F-7
D921	H-7	Q505	F-8
D922	H-7	Q575	E-4
D952	H-7	Q821	G-11
D953	H-7	Q822	G-12
		Q823	G-12
IC11	D-12	Q824	H-12
IC51	A-11	Q825	H-12
IC101	E-8	Q828	G-11
IC102	D-6	Q829	G-11
IC103	C-6	Q831	H-12
IC104	C-7	Q832	H-12
IC105	E-9	Q861	I-9
IC201	B-13	Q862	H-11
IC301	G-6	Q863	H-11
IC302	H-5	Q891	G-12
IC303	F-4	Q892	H-13
IC304	H-4	Q911	C-9
IC501	C-3	Q912	C-10
IC502	E-4		

There are a few cases that the part printed on this diagram isn't mounted in this model.

6-13. SCHEMATIC DIAGRAM – VIDEO SWITCH Board –

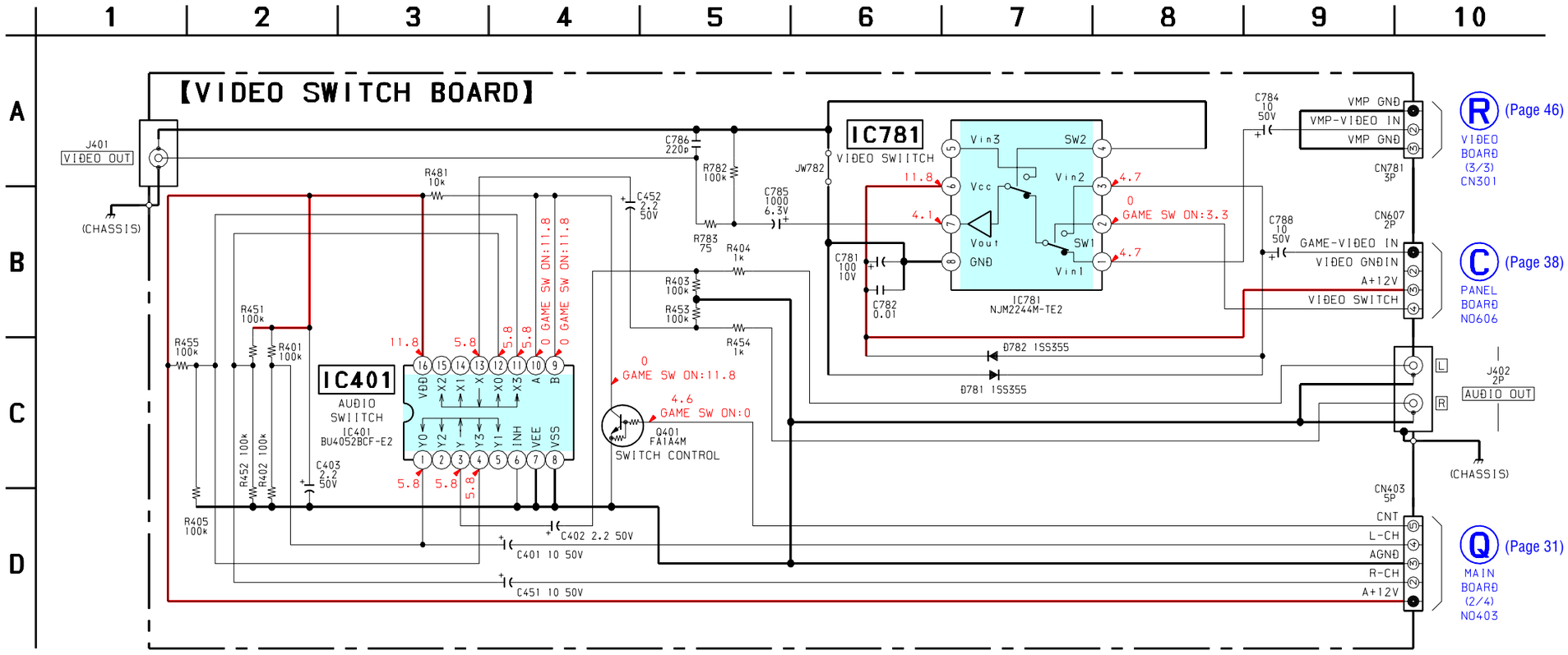

6-14. PRINTED WIRING BOARDS – HEAD (A)/(B) Board –

• See page 27 for Circuit Boards Location. • See page 32 for Schematic Diagram of Head Board.

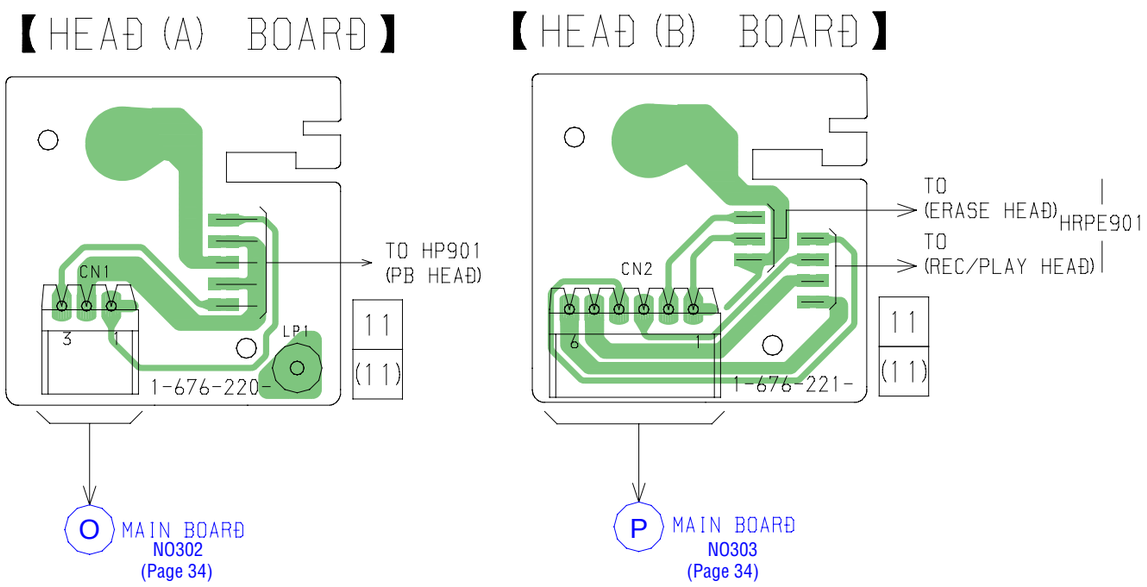

6-15. PRINTED WIRING BOARD – VIDEO SWITCH Board –

• See page 27 for Circuit Boards Location.

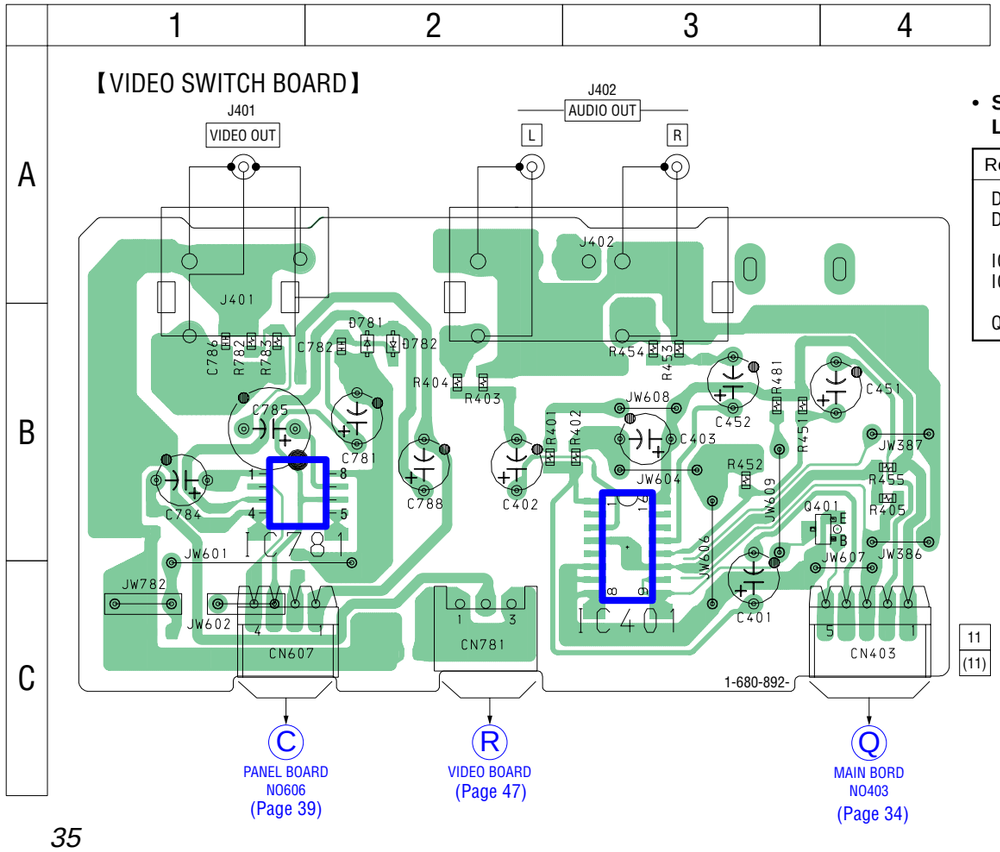

• **Semiconductor Location**

Ref. No.	Location
D781	B-2
D782	B-2
IC401	B-3
IC781	B-1
Q401	B-4

6-16. SCHEMATIC DIAGRAM – POWER AMP/SENSOR Board –

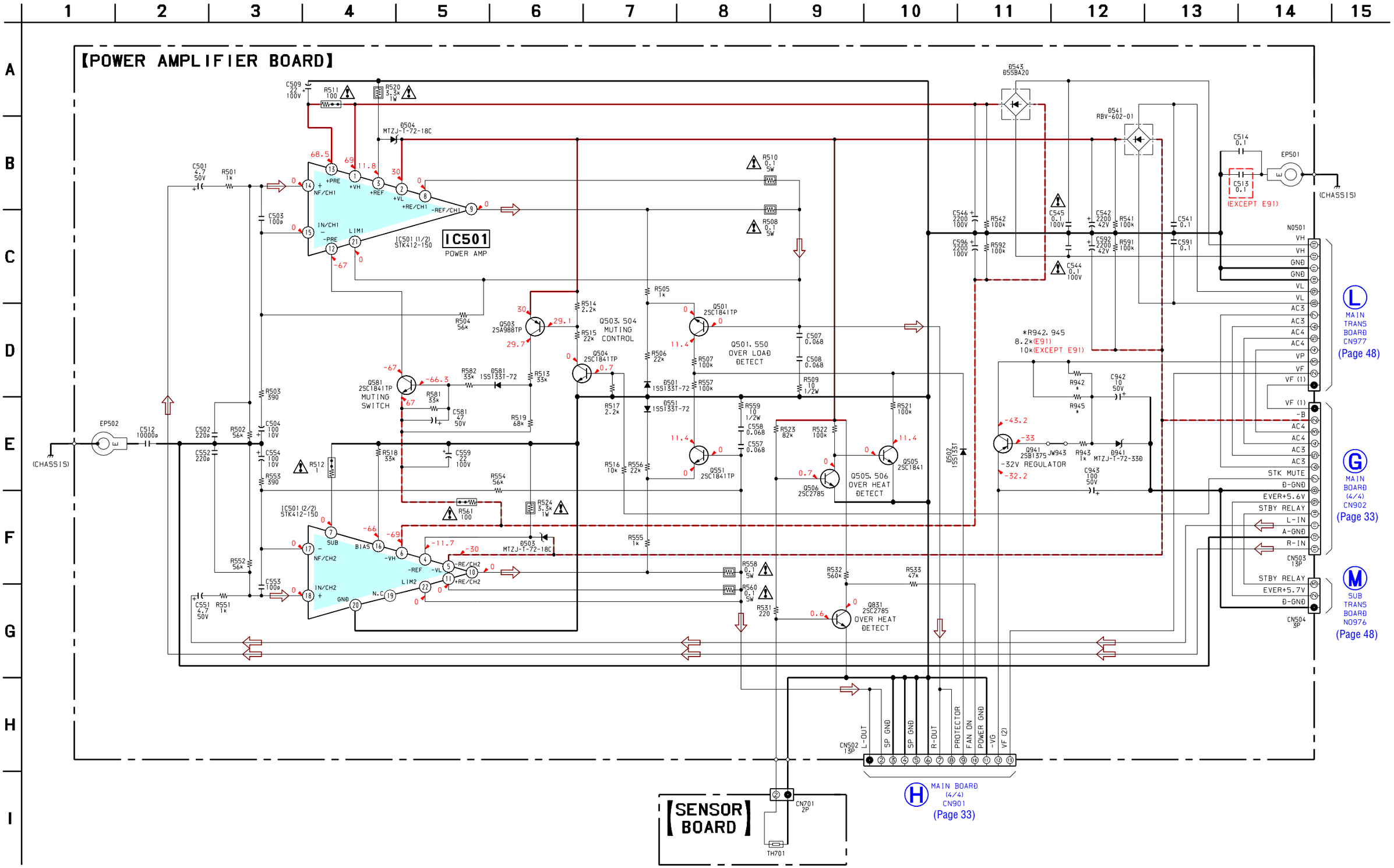

The components identified by mark ⚠ or dotted line with mark ⚠ are critical for safety.
Replace only with part number specified.

- Voltages are dc with respect to ground under no-signal (detuned) conditions.
  no mark : FM

6-17. PRINTED WIRING BOARDS – POWER AMP/SENSOR Board –

• See page 27 for Circuit Boards Location.

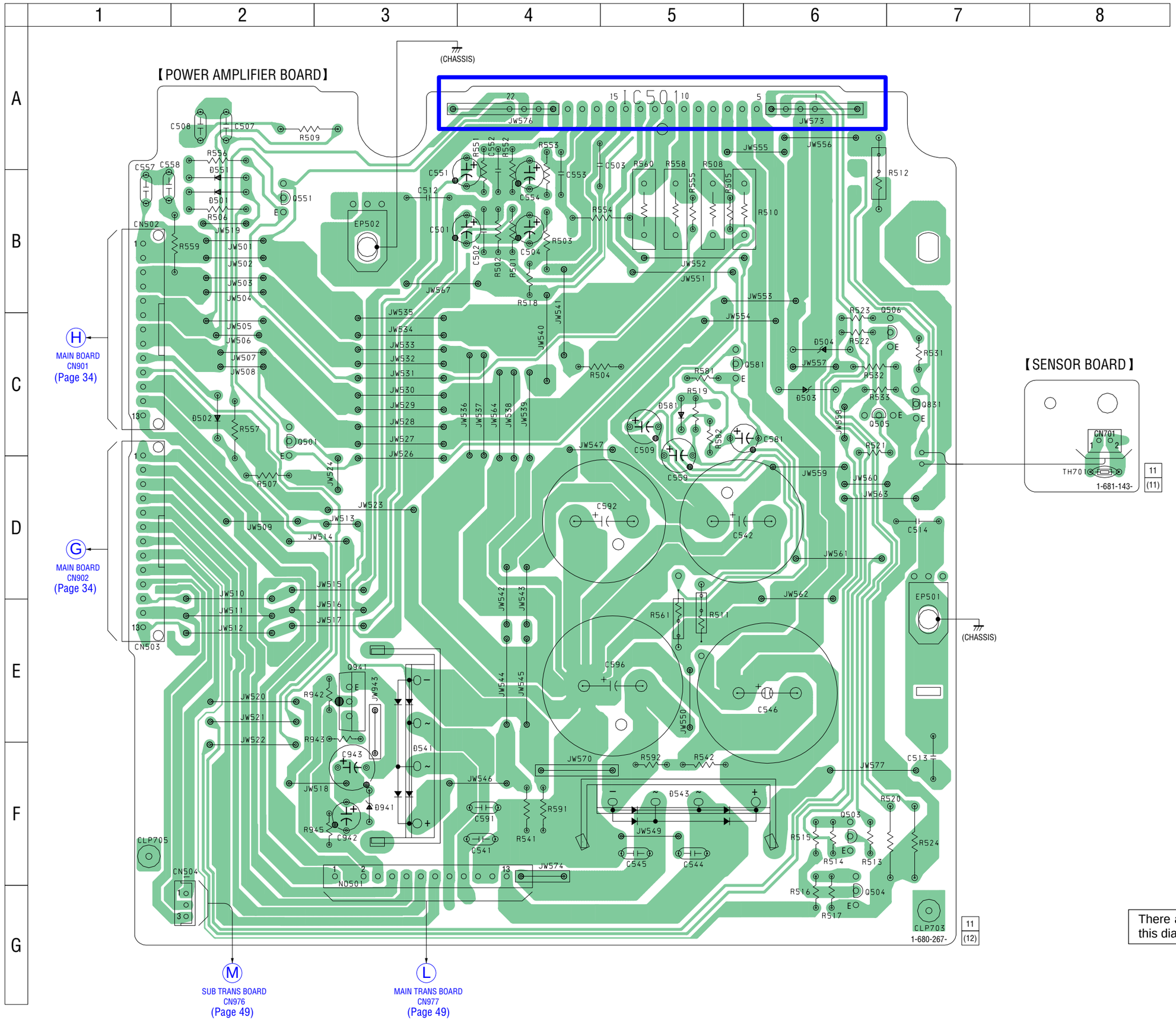

- **Semiconductor Location**

Ref. No.	Location
D501	B-2
D502	C-2
D503	C-6
D504	C-6
D541	E-3
D543	F-5
D551	B-2
D581	C-5
D941	F-3
IC501	A-5
Q501	C-2
Q503	F-6
Q504	G-6
Q505	C-6
Q506	C-7
Q551	B-2
Q581	C-5
Q831	C-7
Q941	E-3

There are a few cases that the part printed on this diagram isn't mounted in this model.

6-18. SCHEMATIC DIAGRAM – PANEL Board –

• See page 50 for Waveform. • See page 55 for IC Pin Function Description. • See page 54 for IC Block Diagram.

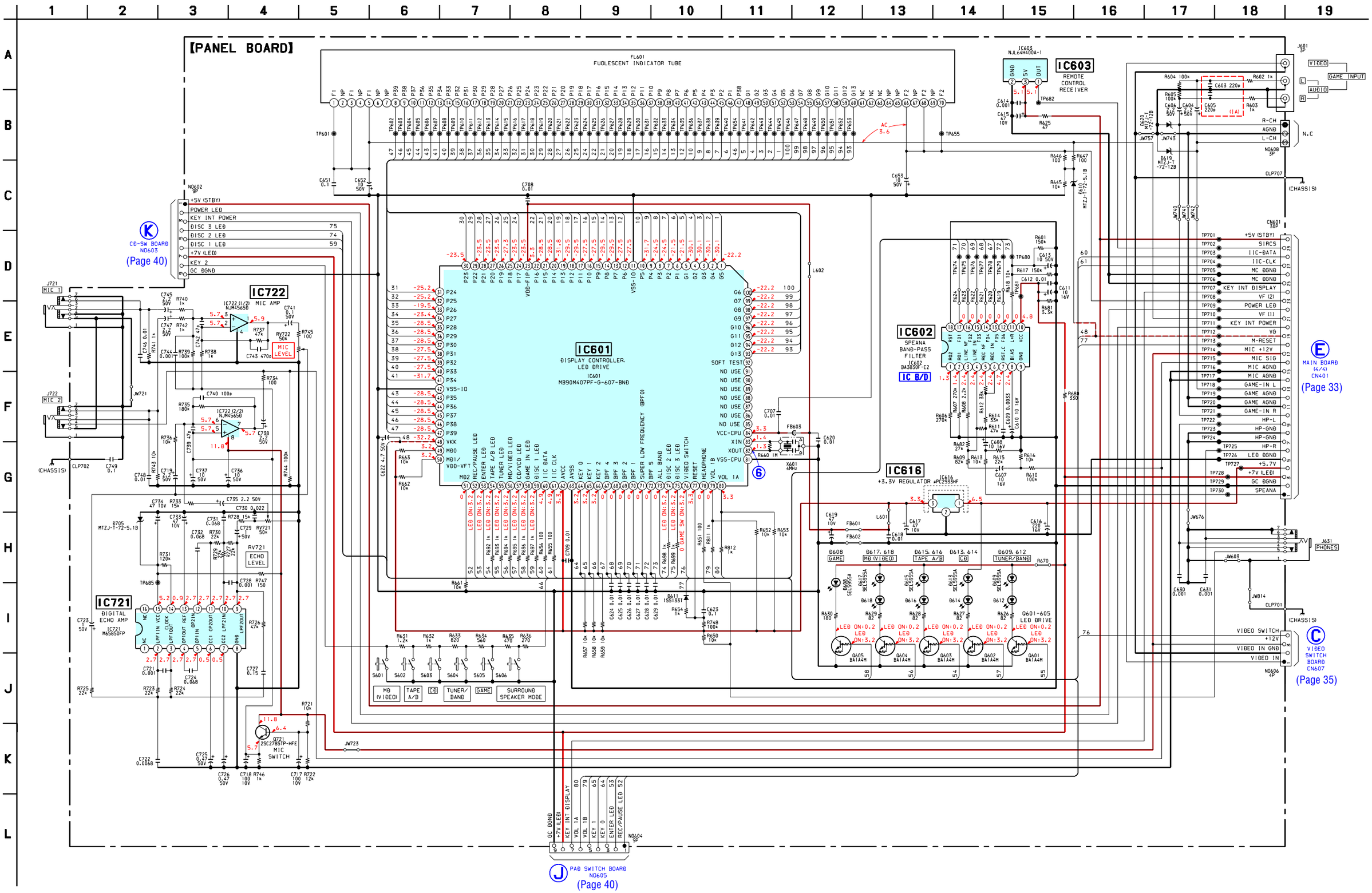

• Voltages and waveforms are dc with respect to ground under no-signal (detuned) conditions.
no mark : FM

6-19. PRINTED WIRING BOARD – PANEL Board – • See page 27 for Circuit Boards Location.

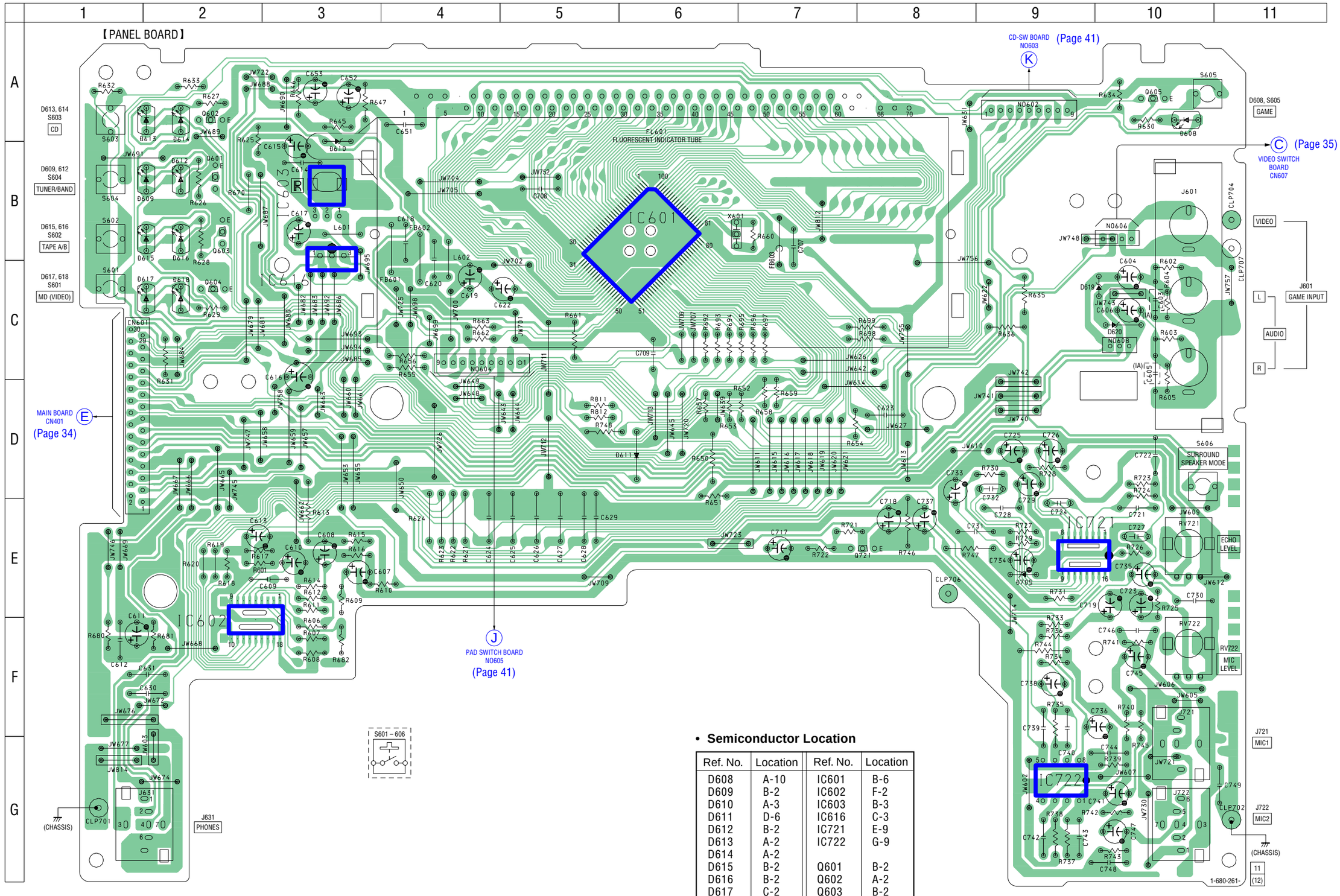

There are a few cases that the part printed on this diagram isn't mounted in this model.

• **Semiconductor Location**

Ref. No.	Location	Ref. No.	Location
D608	A-10	IC601	B-6
D609	B-2	IC602	F-2
D610	A-3	IC603	B-3
D611	D-6	IC616	C-3
D612	B-2	IC721	E-9
D613	A-2	IC722	G-9
D614	A-2		
D615	B-2	Q601	B-2
D616	B-2	Q602	A-2
D617	C-2	Q603	B-2
D618	C-2	Q604	C-2
D619	C-10	Q605	A-11
D620	C-10	Q721	E-8
D705	E-9		

6-20. SCHEMATIC DIAGRAM – CD SWITCH/PAD SWITCH Board –

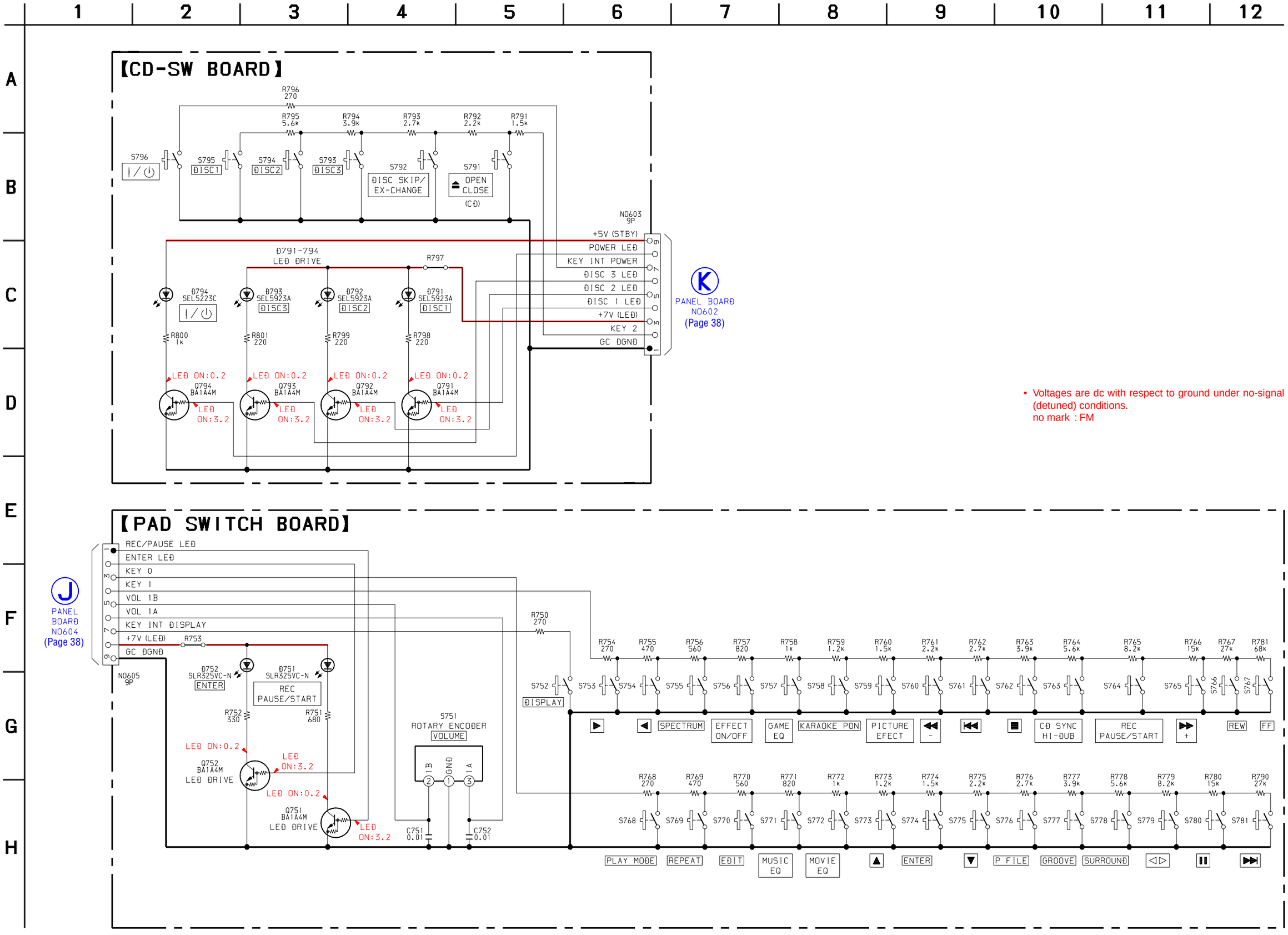

- Voltages are dc with respect to ground under no-signal (detuned) conditions.
  no mark : FM

6-21. PRINTED WIRING BOARDS – CD SWITCH/PAD SWITCH Board – • See page 27 for Circuit Boards Location.

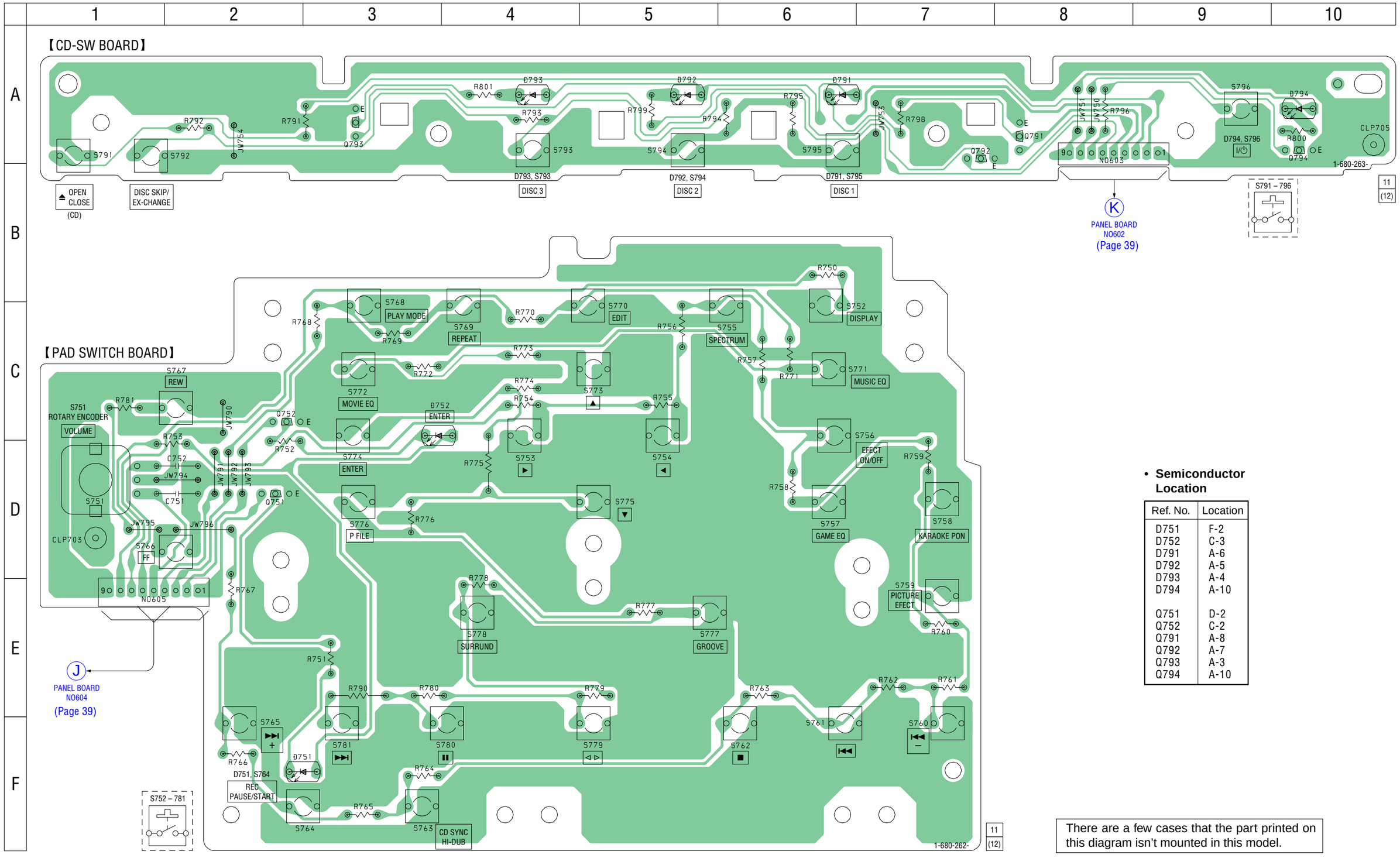

- **Semiconductor Location**

Ref. No.	Location
D751	F-2
D752	C-3
D791	A-6
D792	A-5
D793	A-4
D794	A-10
Q751	D-2
Q752	C-2
Q791	A-8
Q792	A-7
Q793	A-3
Q794	A-10

There are a few cases that the part printed on this diagram isn't mounted in this model.

6-22. SCHEMATIC DIAGRAM – LEAF SW Board –

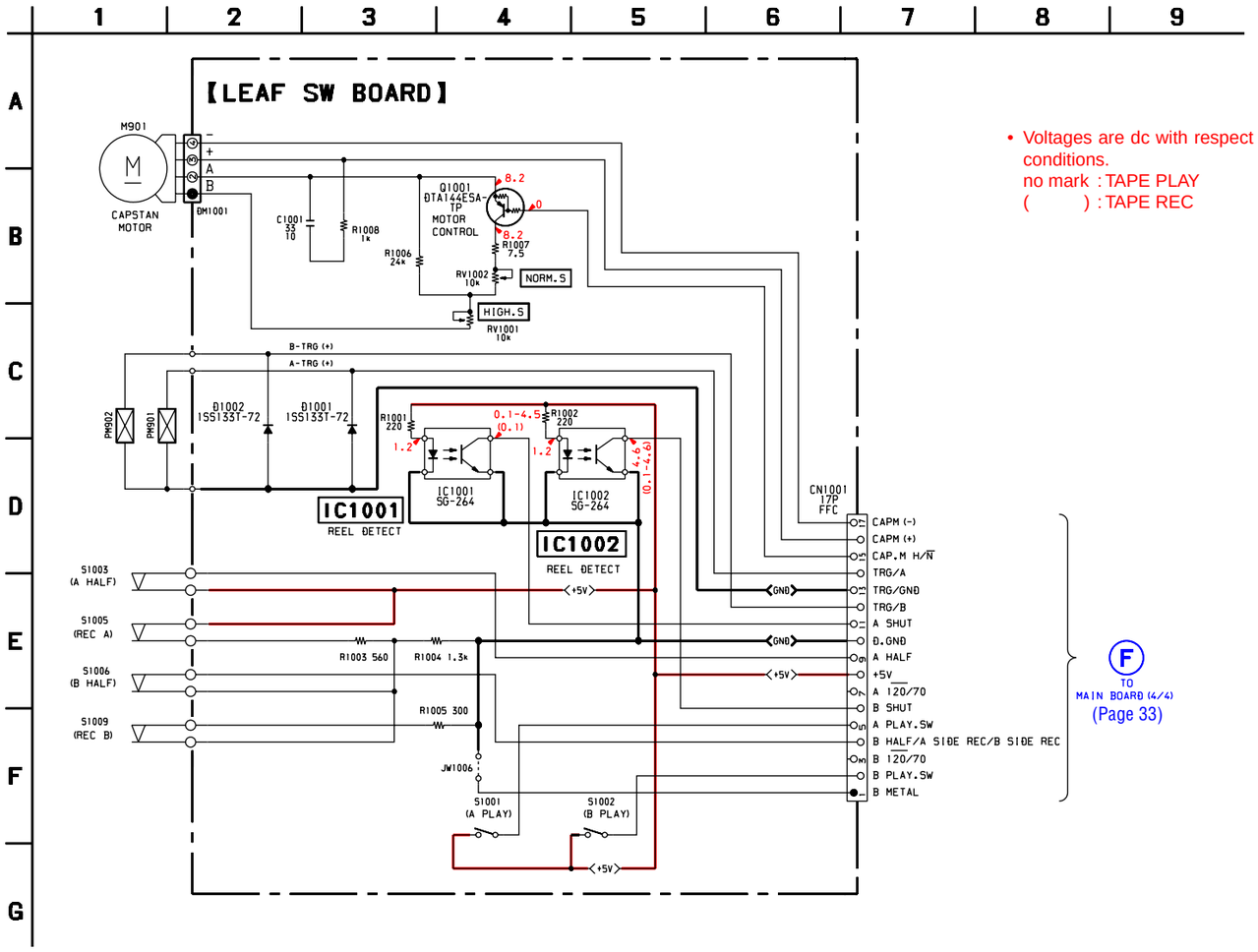

- Voltages are dc with respect to ground under no-signal conditions.
  no mark : TAPE PLAY
  ( ) : TAPE REC

6-23. PRINTED WIRING BOARDS – LEAF SW Board – • See page 27 for Circuit Boards Location.

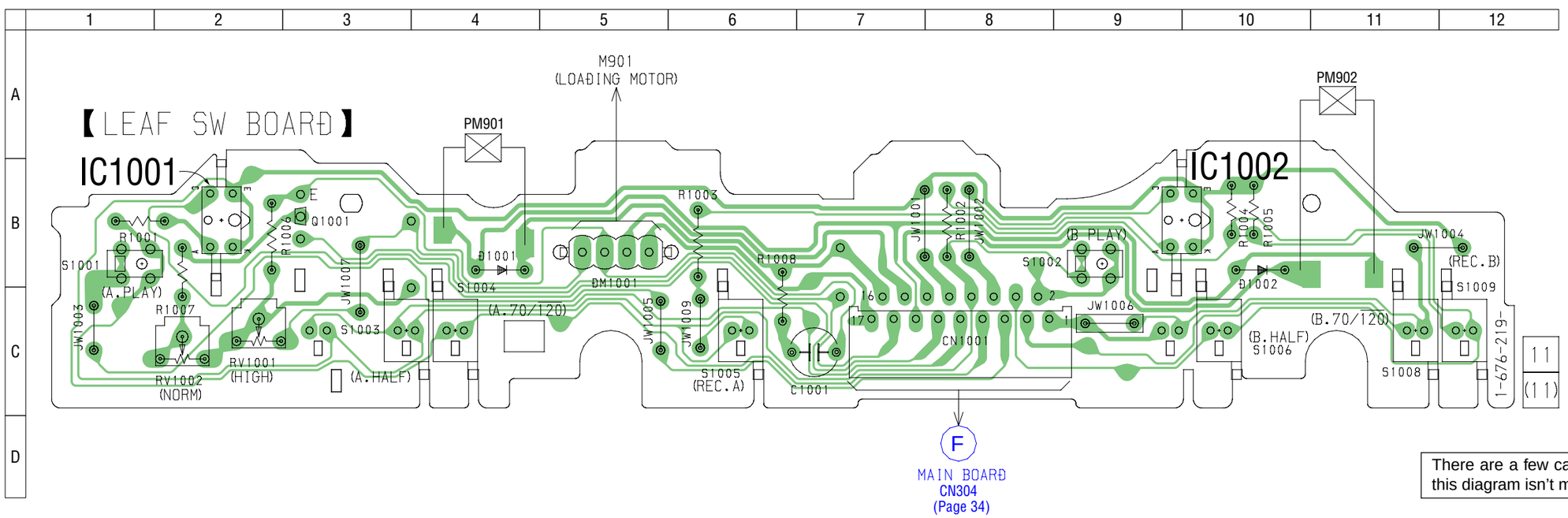

- **Semiconductor Location**

Ref. No.	Location
D1001	B-4
D1002	B-10
IC1001	B-2
IC1002	B-10
Q1001	B-3

There are a few cases that the part printed on this diagram isn't mounted in this model.

6-24. SCHEMATIC DIAGRAM – ADDRESS SENSOR/DRIVER/MOTOR Board – • See page 54 for IC Block Diagram.

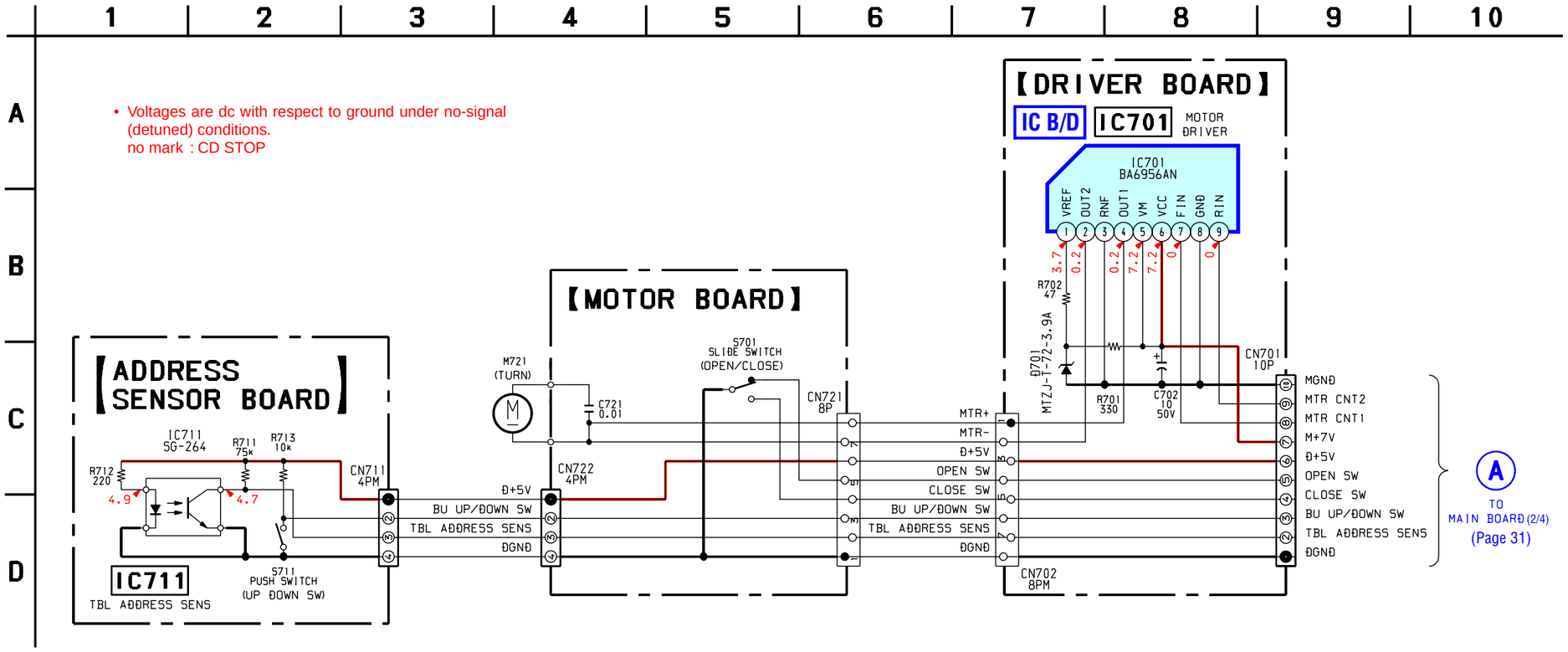

6-25. PRINTED WIRING BOARDS – ADDRESS SENSOR/DRIVER/MOTOR Board – • See page 27 for Circuit Boards Location.

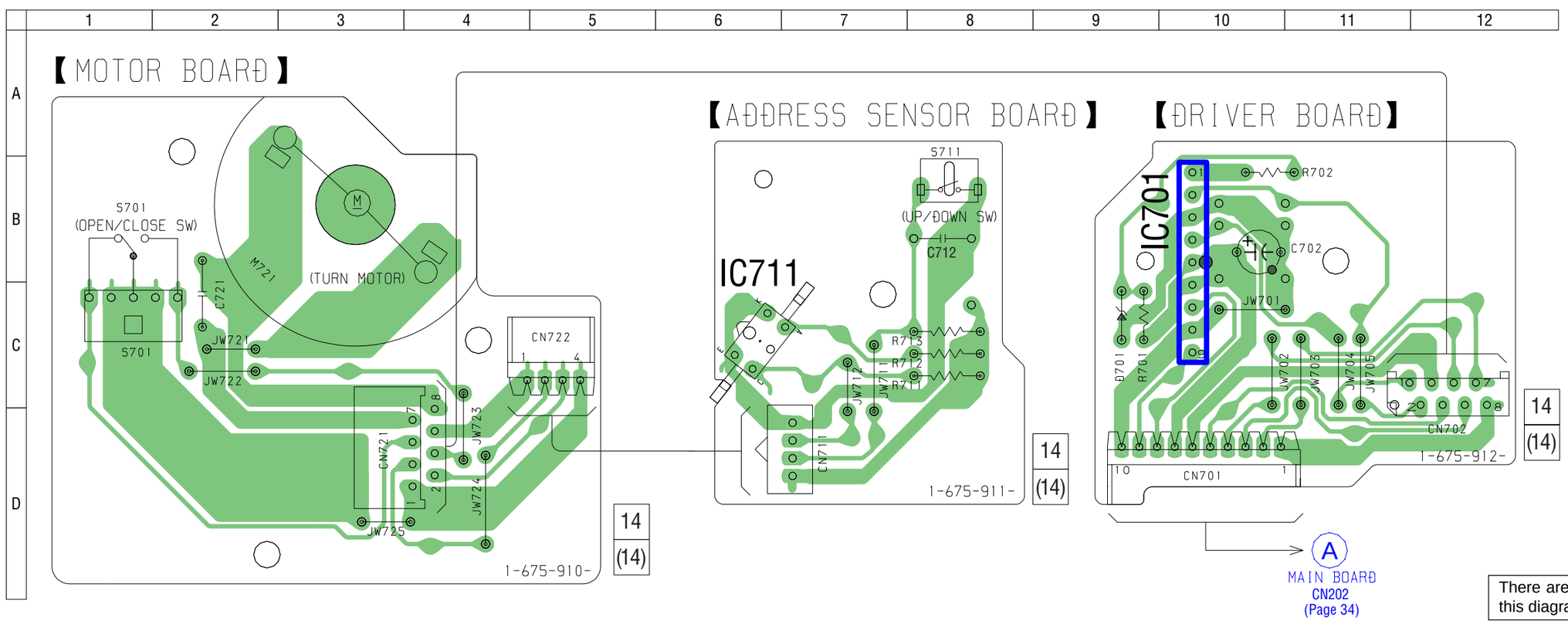

• **Semiconductor Location**

Ref. No.	Location
D701	C-9
IC701	G-10
IC711	C-6

There are a few cases that the part printed on this diagram isn't mounted in this model.

6-26. SCHEMATIC DIAGRAM – VIDEO Board (1/3) –

• See page 50 for Waveforms. • See page 55 for IC Pin Function Description.

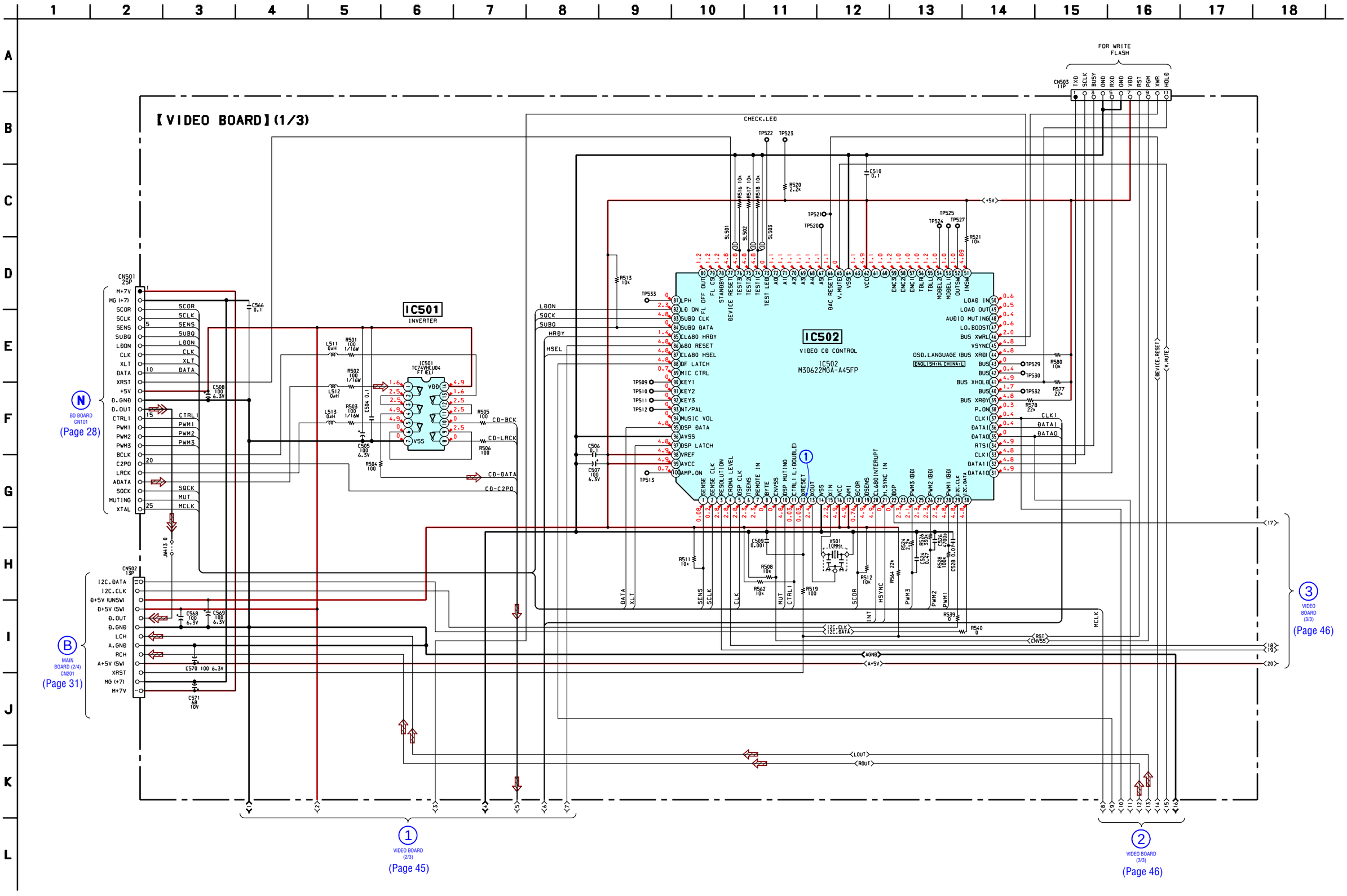

6-27. SCHEMATIC DIAGRAM – VIDEO Board (2/3) – • See page 50 for Waveforms.

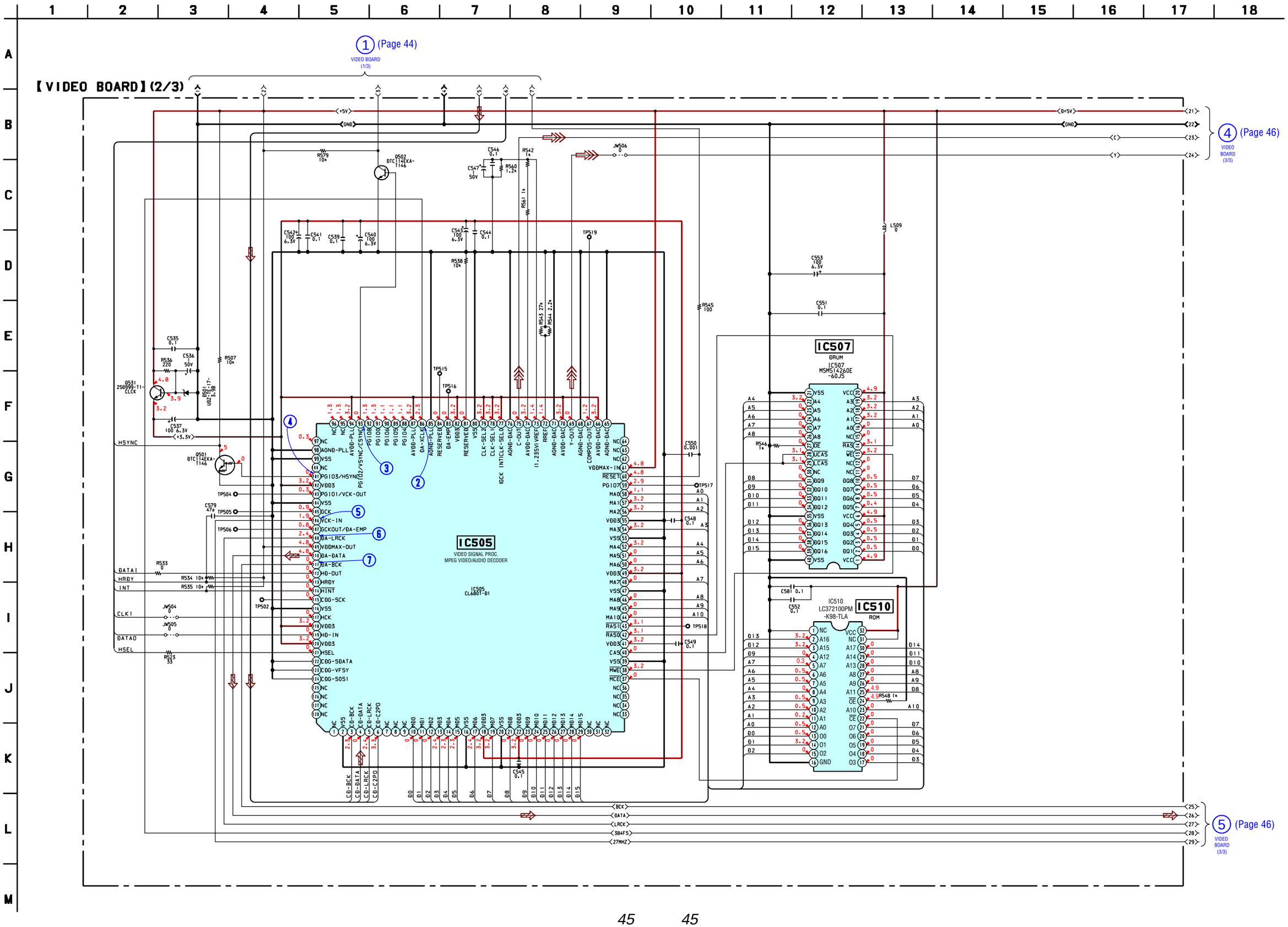

6-28. SCHEMATIC DIAGRAM – VIDEO Board (3/3) – • See page 50 for Waveforms.

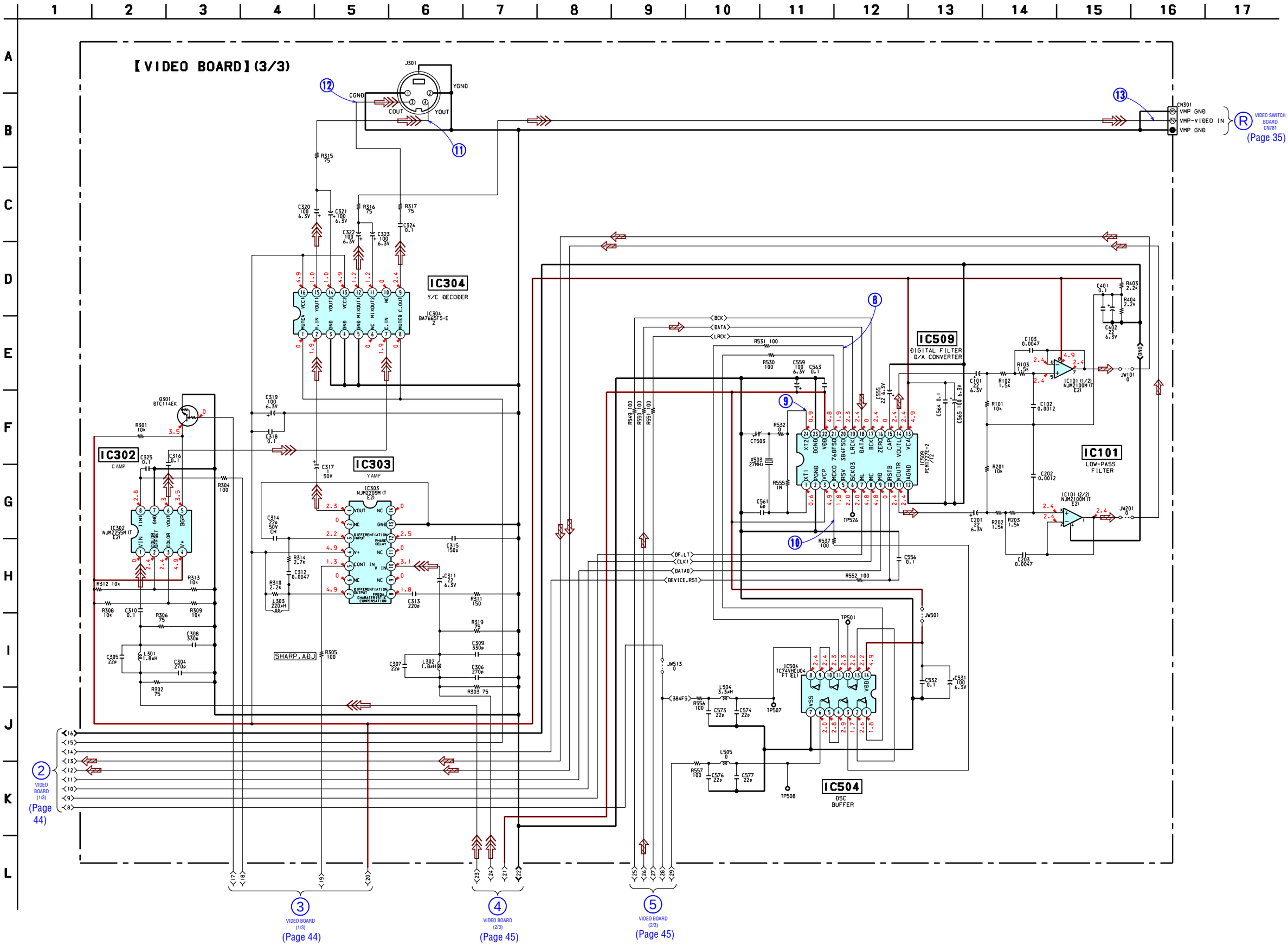

6-29. PRINTED WIRING BOARD – VIDEO Board – • See page 27 for Circuit Boards Location.

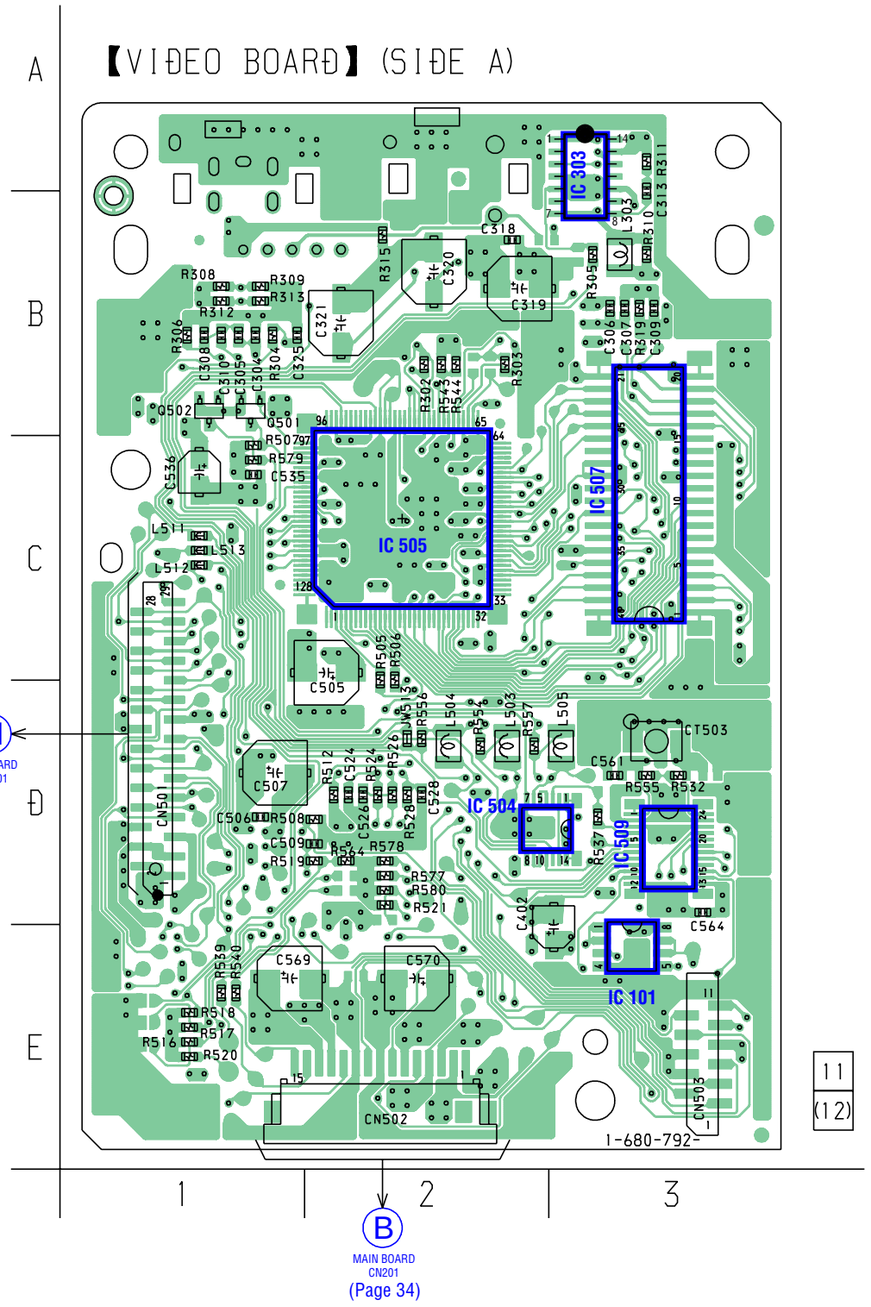

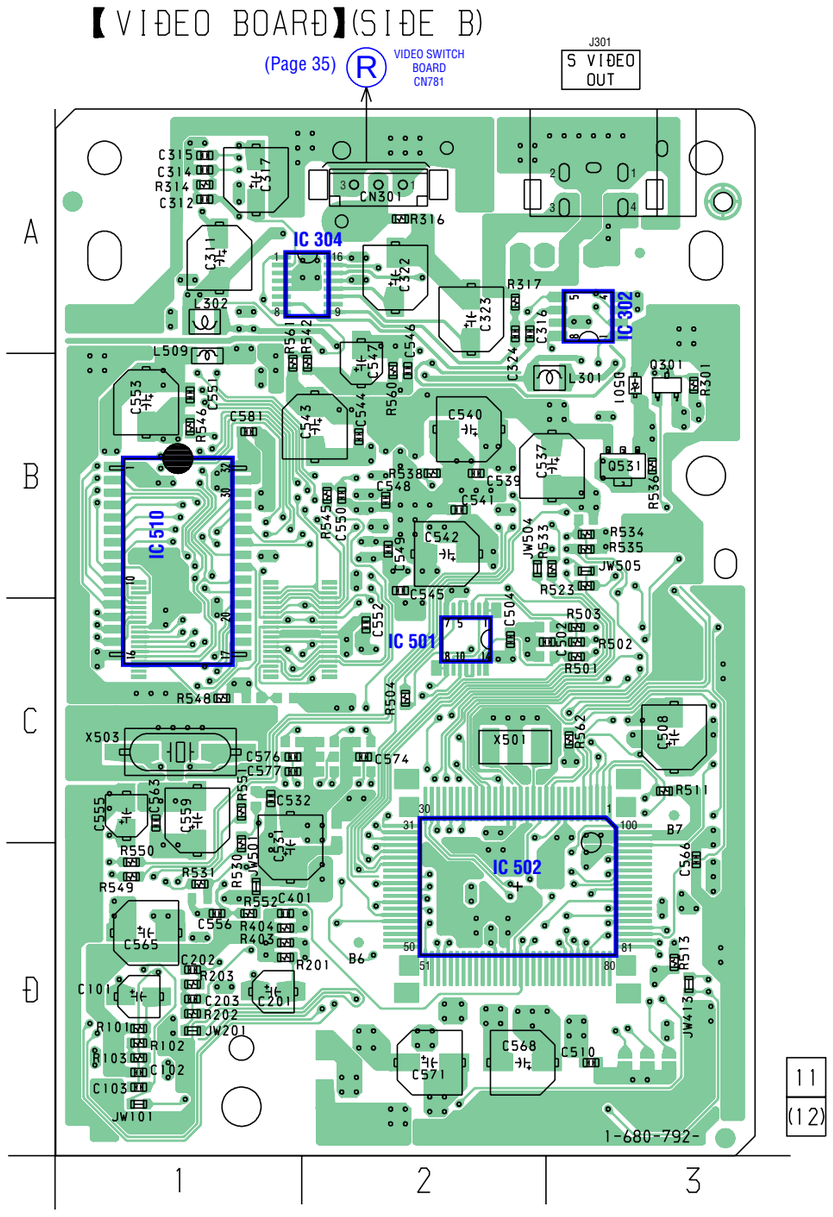

- **Semiconductor Location**

Ref. No.	Location
IC101	E-3
IC303	A-3
IC504	D-3
IC505	C-2
IC507	C-7
IC509	D-3
Q501	B-1
Q502	B-1

- **Semiconductor Location**

Ref. No.	Location
D501	B-3
IC302	A-3
IC304	A-1
IC501	C-2
IC502	D-2
IC510	B-1
Q301	B-3
Q531	B-3

6-30. SCHEMATIC DIAGRAM – MAIN TRANS/SUB TRANS Board –

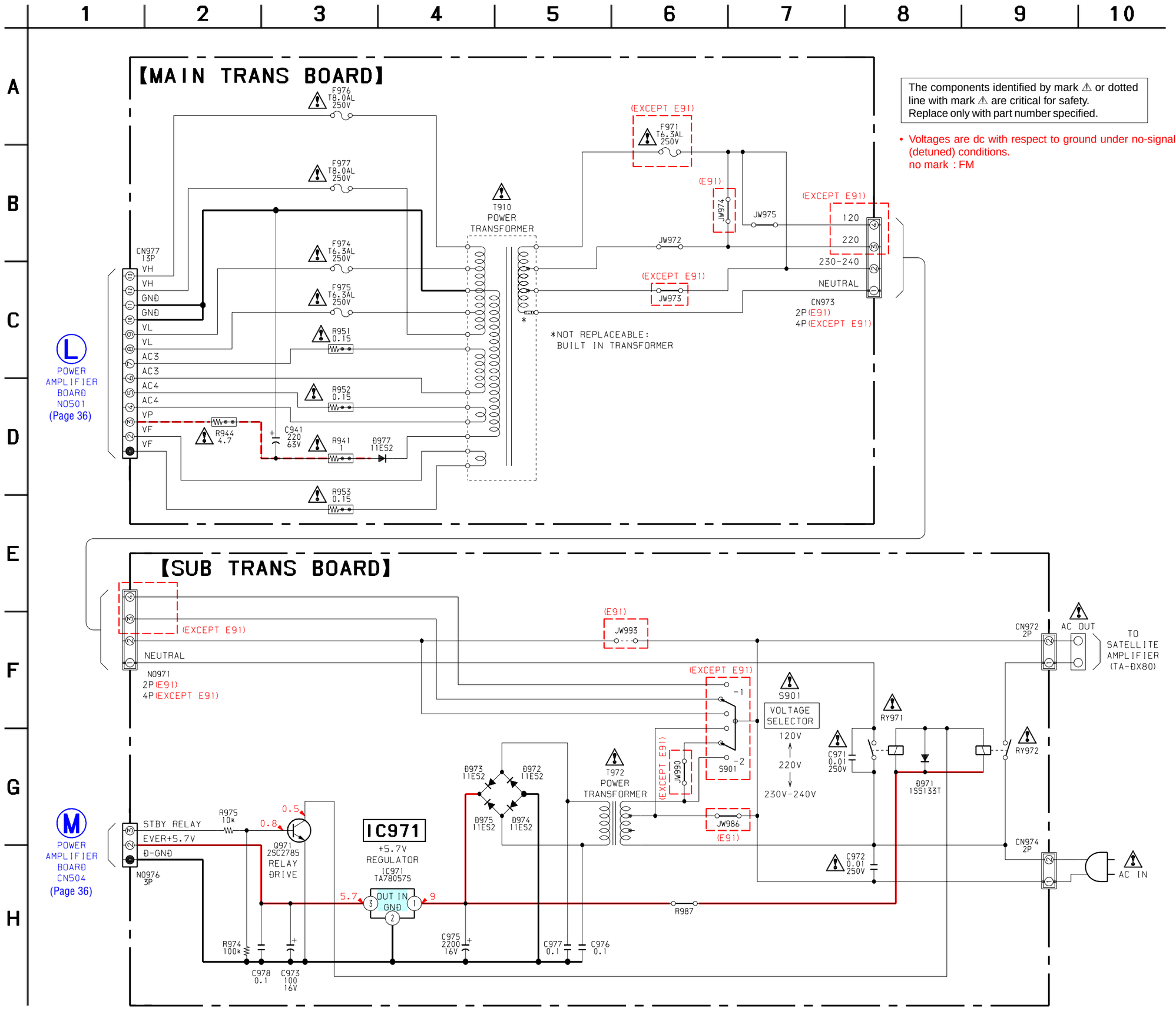

The components identified by mark ⚠ or dotted line with mark ⚠ are critical for safety.
Replace only with part number specified.

- Voltages are dc with respect to ground under no-signal (detuned) conditions.
  no mark : FM

6-31. PRINTED WIRING BOARDS – MAIN TRANS/SUB TRANS Board – • See page 27 for Circuit Boards Location.

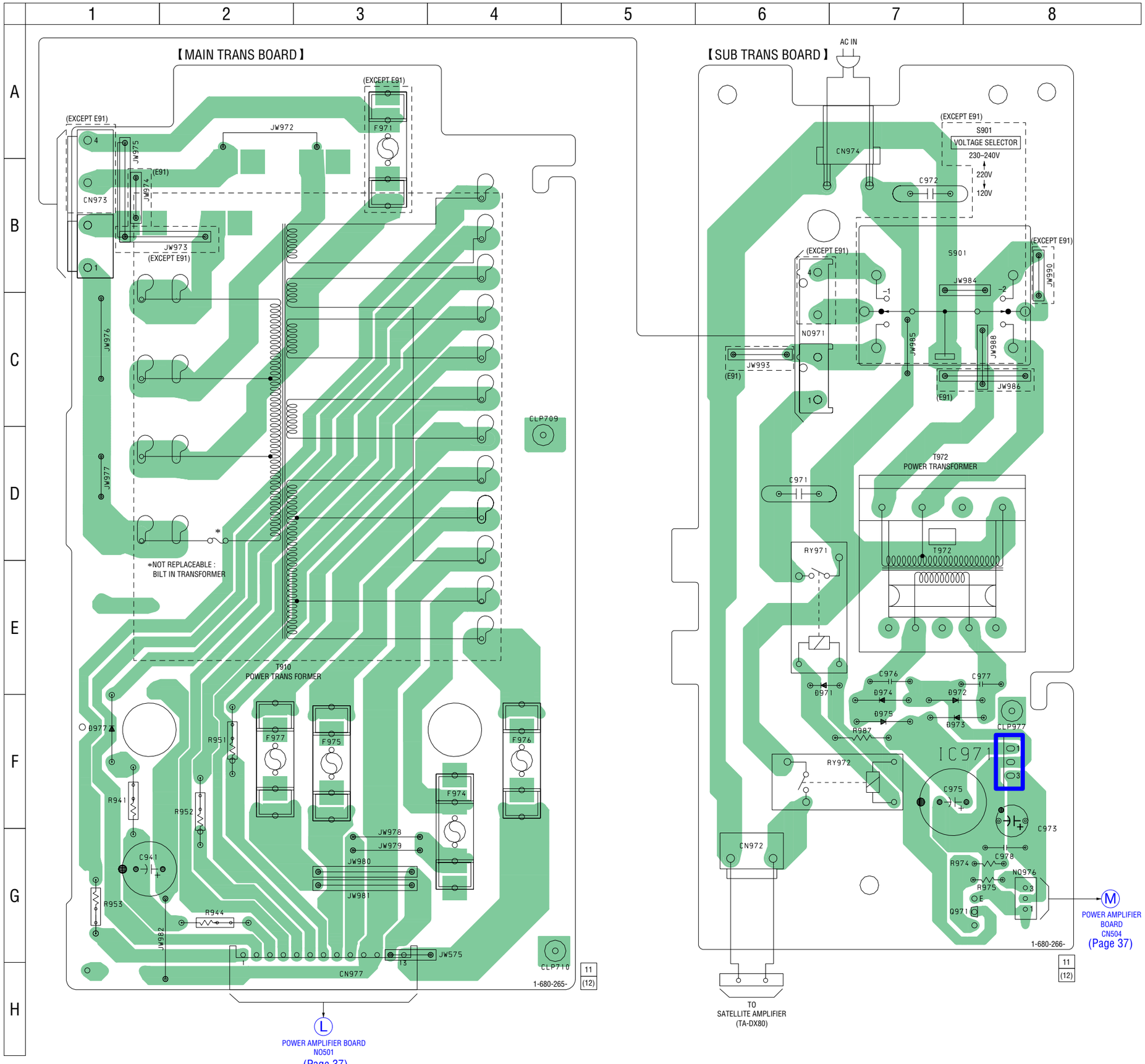

- **Semiconductor Location**

Ref. No.	Location
D971	E-6
D972	F-7
D973	F-7
D974	F-7
D975	F-7
D977	F-1
IC971	F-8
Q971	G-8

There are a few cases that the part printed on this diagram isn't mounted in this model.

- **Waveforms**

– BD Board –

❶ IC101 ㊿ (RFAC) (CD Play mode)

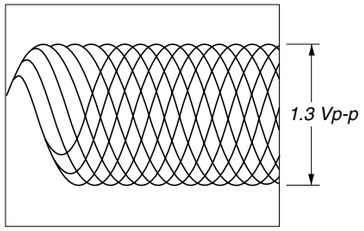

❷ IC101 ㊶ (TE) (CD Play mode)

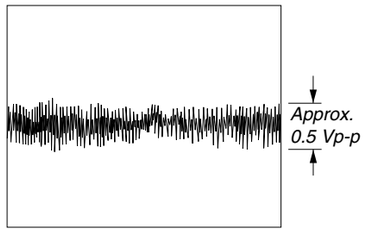

❸ IC101 ㊴ (FE) (CD Play mode)

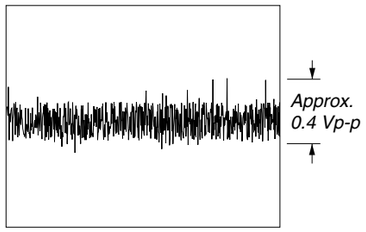

❹ IC101 ㉖ (MDP)

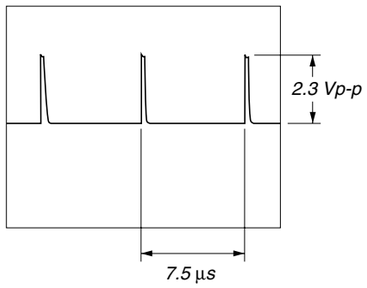

– MAIN Board –

❶ IC51 ㉒ (X OUT) (TUNER (FM))

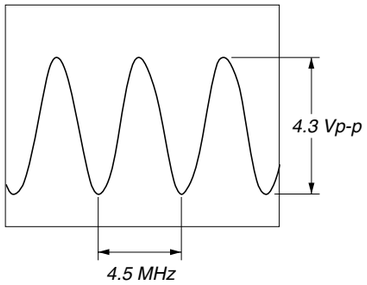

❷ IC501 ⑪ (XC OUT) (Stop mode)

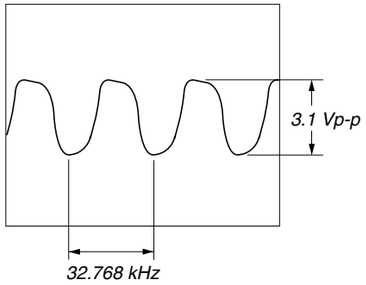

❸ IC501 ⑬ (X OUT) (Stop mode)

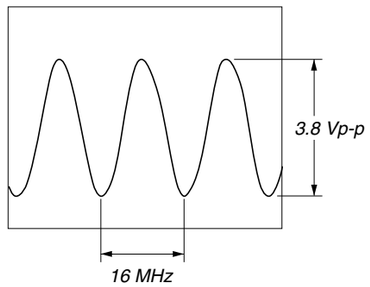

❹ T301 ④ (DECK-B REC mode)

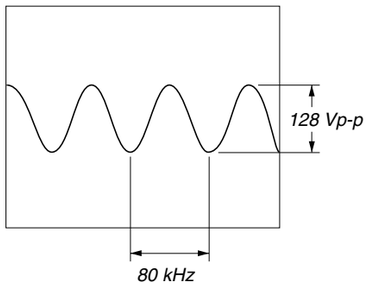

❺ NO303 ③ (L-REC), ⑥ (R-REC) (DECK-B REC mode)

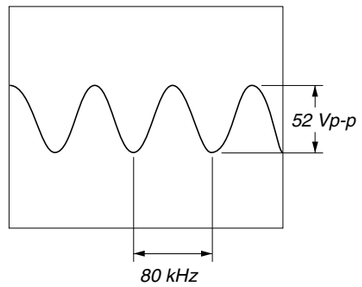

– PANEL Board –

❻ IC601 ㉜ (X OUT) (Stop mode)

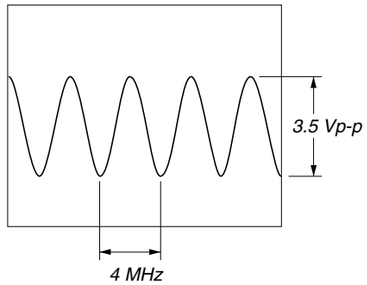

– VIDEO Board –

❶ IC502 ⑬ (XOUT)

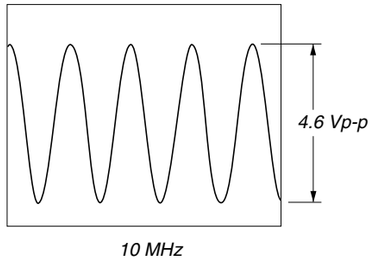

❷ IC505 ㊻ (DA-XCLK)

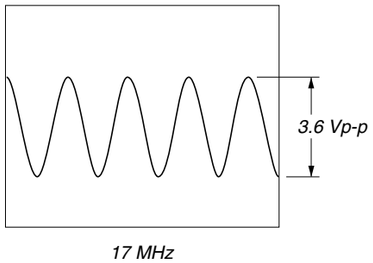

❸ IC505 ㉝ (VSYNC)

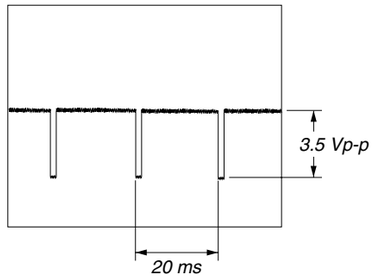

❹ IC505 ㉑ (HSYNC)

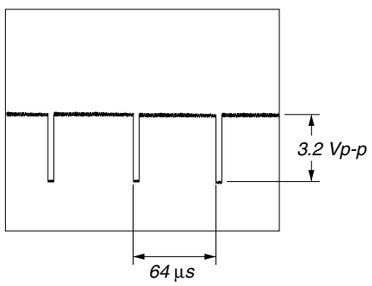

❺ IC505 ⑯ (VCK-IN)

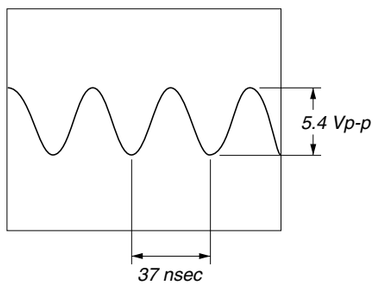

❻ IC505 ⑱ (DA-LRCK)

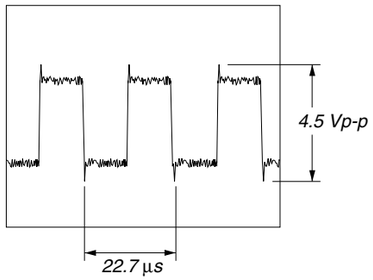

❼ IC505 ⑪ (DA-BCK)

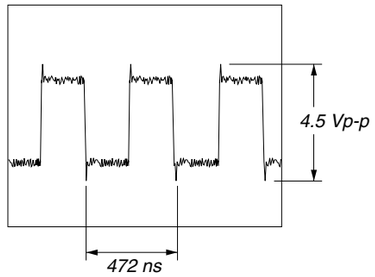

❽ IC509 ⑳ (384FSO)

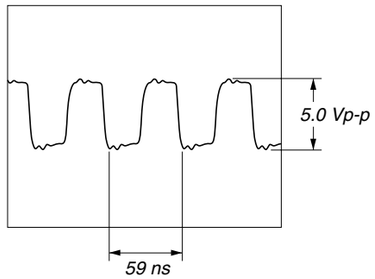

❾ IC509 ㉔ (XT2)

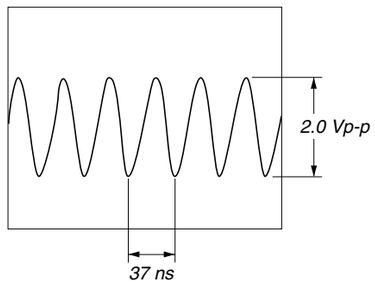

❿ IC509 ④ (MCKO)

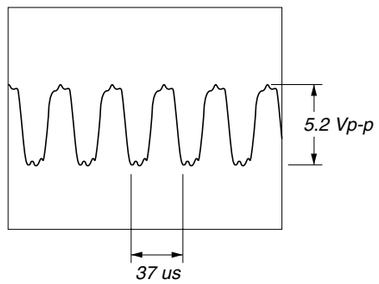

⓫ J301 ④ (YOUT)

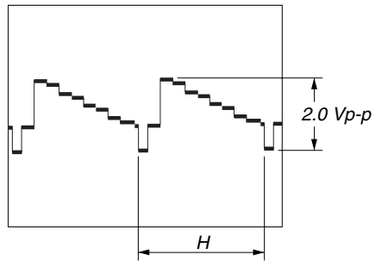

⓬ J301 (COUT)

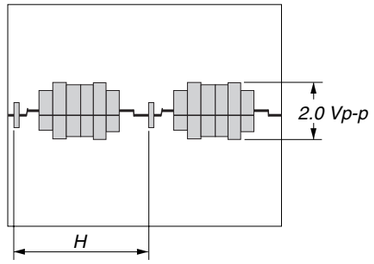

⓭ CN301 ② (VIDEO OUT)

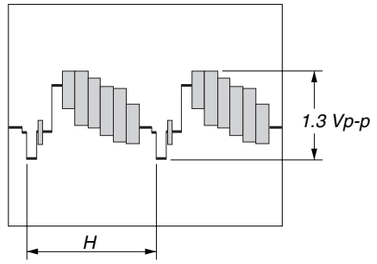

50

- **IC Block Diagrams**

– BD Board –

IC101 CXD3068Q

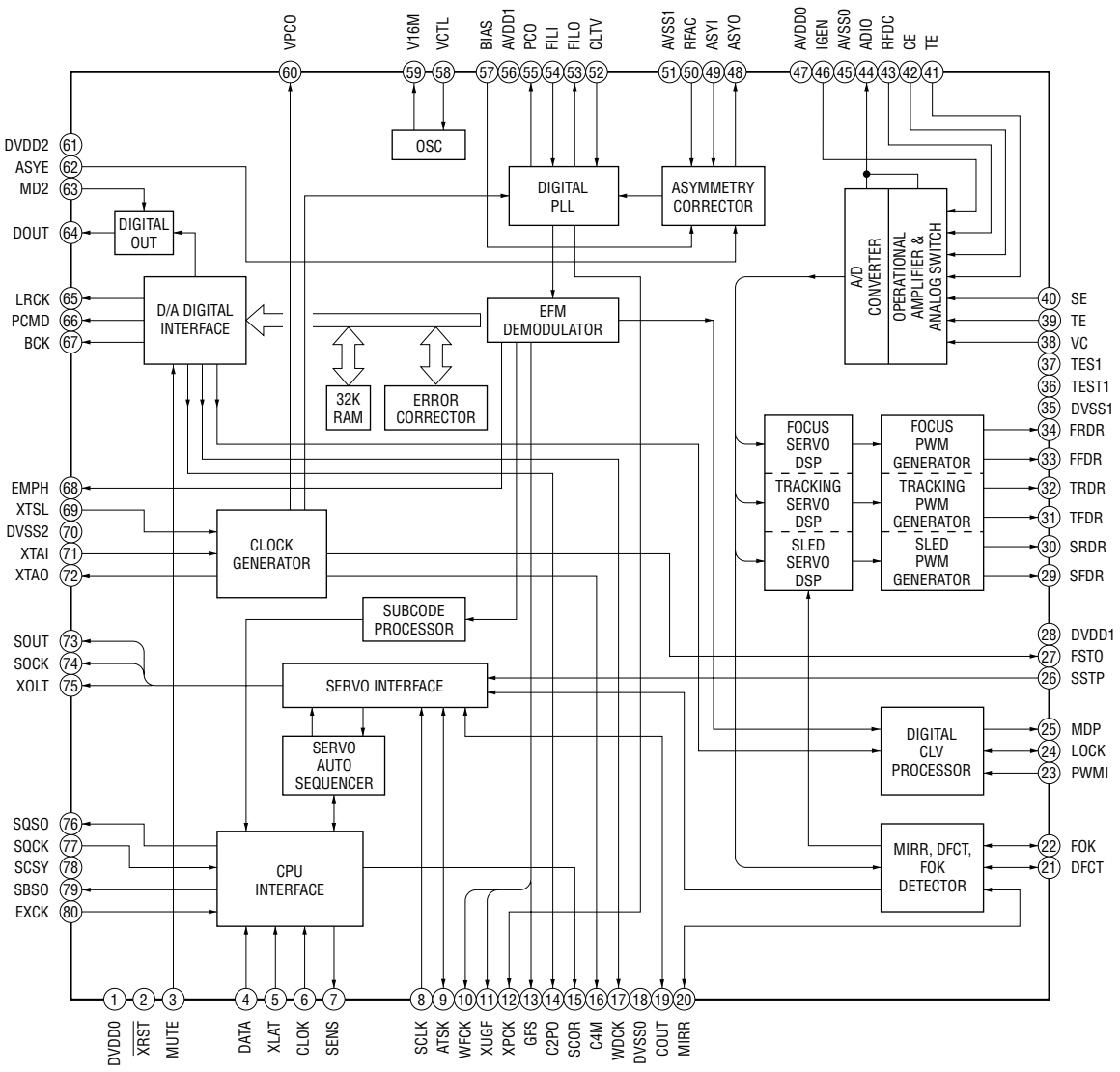

IC103 CXA2581N-T4

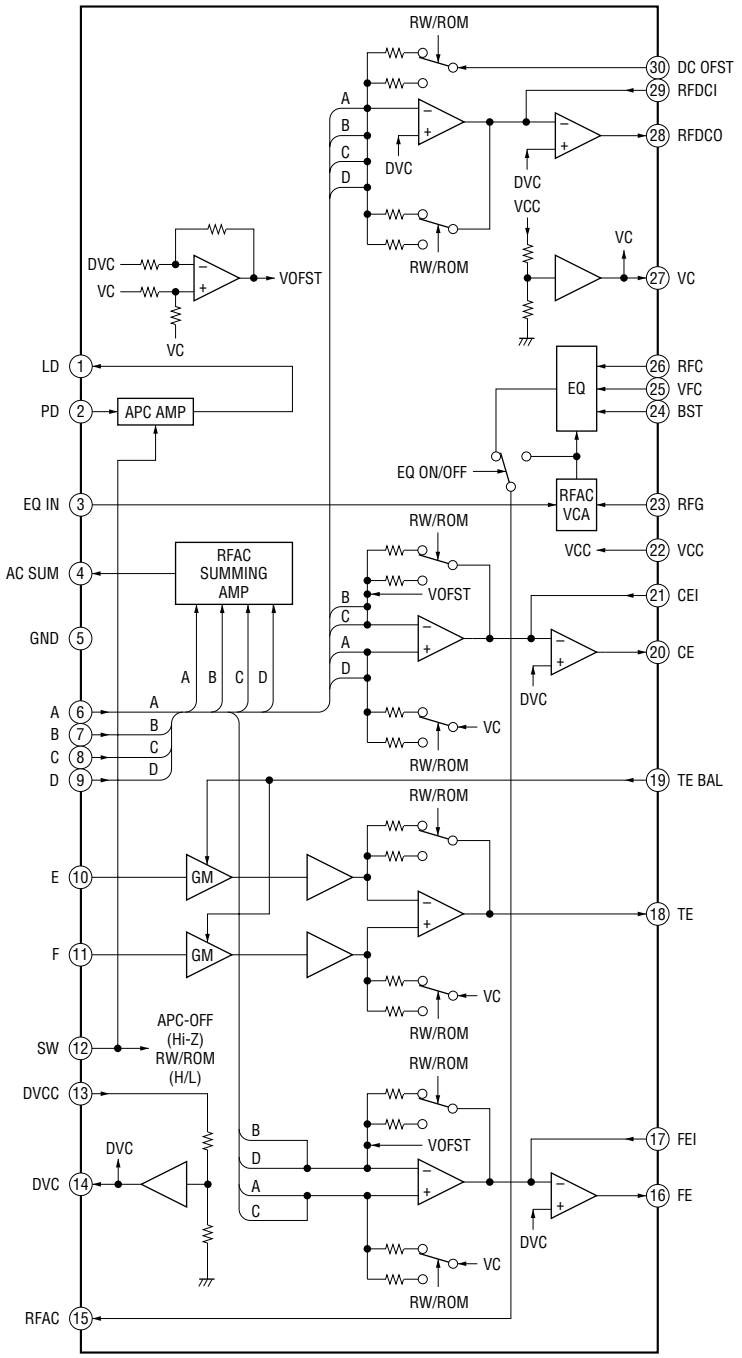

– MAIN Board –

IC11 LA1845

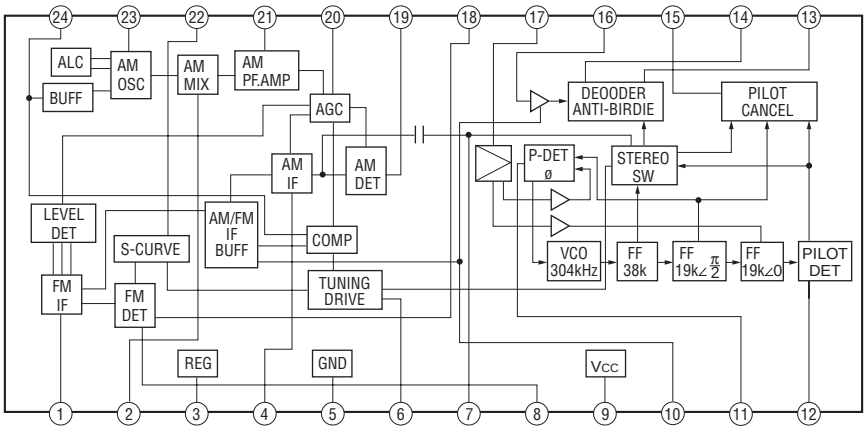

IC51 LC72131

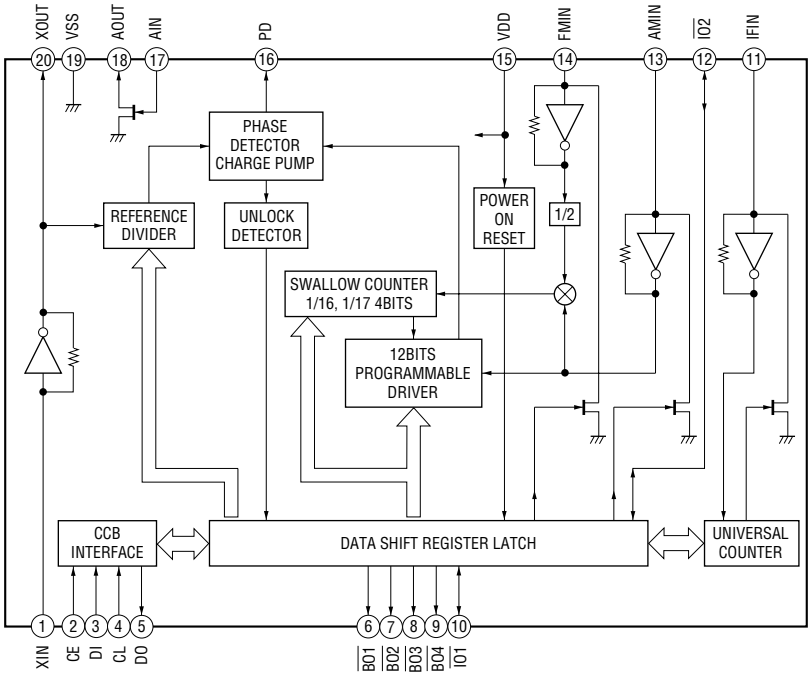

IC105 BU4052BCF-E2

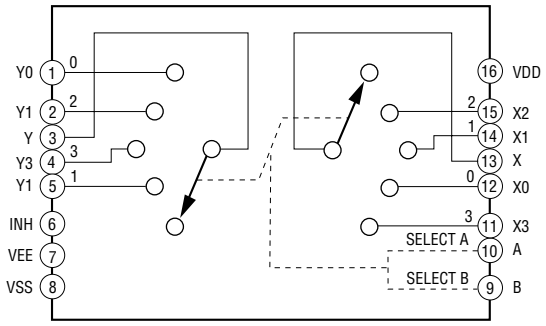

IC302 µPC1330HA

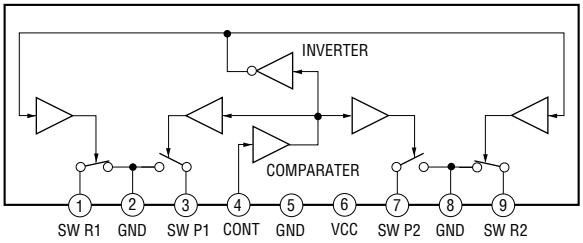

– PANEL Board –

IC602 BA3830F-E2

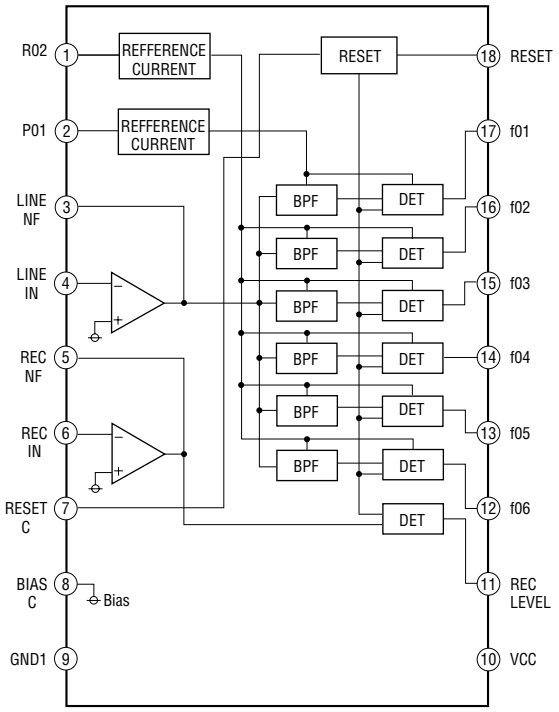

– DRIVER Board –

IC701 BA6956AN

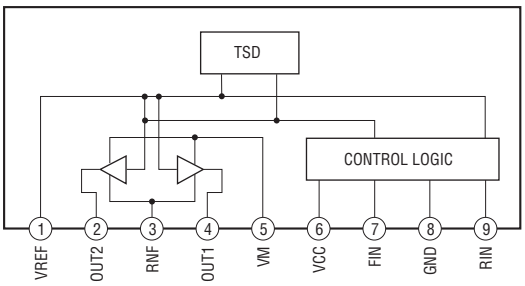

6-32. IC PIN FUNCTION DESCRIPTION

• MAIN BOARD IC501 M30620MCA-A95FP (SYSTEM CONTROLLER)

Pin No.	Pin Name	I/O	Description
1	AUDIO OUT ON/OFF	O	Audio output on/off control signal output to the Audio SWITCH (IC401) “H”: ON, “L” OFF
2	STEREO	I	Stereo detection signal input from the LA1845 (IC11) “L”: Stereo in
3	TUNED	I	Tuning detection signal input from the LA1845 (IC11) “L”: Tuned in
4	SIRCS	I	Remote commander receiver signal input terminal
5	SUR1	O	Surround control signal output to the LA2615 (IC103)
6	SUR2	O	Surround control signal output to the LA2615 (IC103)
7	SUR3	O	Surround control signal output to the LA2615 (IC103)
8	GND	—	Ground terminal
9	GND	—	Ground terminal
10	XC IN	I	Sub system clock input terminal (32.768 kHz)
11	XC OUT	O	Sub system clock output terminal (32.768 kHz)
12	RESET	I	System reset signal input from the reset signal generator (IC502) “L”: reset
13	X-OUT	O	Main system clock output terminal (16 MHz)
14	VSS	—	Ground terminal
15	X-IN	I	Main system clock input terminal (16 MHz)
16	VCC	—	Power supply terminal (+5V)
17	NMI	I	For pull up terminal (connected to Ever +5V)
18	RDS-INT	I	RDS interrupt signal input terminal Not used (fixed at “L”)
19	SCOR	I	Subcode sync (S0+S1) detection signal input terminal Not used (fixed at “L”)
20	RDS-DATA	I	RDS data signal input terminal Not used (fixed at “L”)
21	ST-MUTE	O	Muting on/off control signal output to the LA1845 (IC11)
22	ST-CE	O	PLL chip enable signal output to the FM/AM PLL (IC51)
23	ST-DOUT	O	PLL serial data output to the FM/AM PLL (IC51)
24	BU-PWM3	O	RF data control signal output terminal Not used (open)
25	ST-DIN	I	PLL serial data input from the FM/AM PLL (IC51)
26	BU-PWM2	O	Tracking error control signal output terminal Not used (open)
27	ST-CLK	O	PLL serial data transfer clock signal output to the FM/AM PLL (IC51)
28	BU-PWM1	O	Focus error control signal output terminal Not used (open)
29	IIC-CLK	I/O	Shift clock signal input/output for the IIC bus
30	IIC-DATA	I/O	Data input/output terminal for the IIC bus
31	TXD1	O	Not used (open)
32	SQ-DATA	I	Subcode Q data input terminal Not used (fixed at “L”)
33	SQ-CLK	O	Subcode Q data reading clock signal output terminal Not used (open)
34	SENS	I	Internal status detection monitor input terminal Not used (fixed at “L”)
35	CD-DATA	O	Serial data output terminal Not used (open)
36	NC	—	Not used (fixed at “L”)
37	CD-CLK	O	Serial clock signal output terminal Not used (open)
38	CD-POWER	O	CD power on/off control signal output “L”: on, “H”: off
39	CLOCK-OUT	O	Clock signal output terminal Not used (open)
40	HOLD	O	Automatic power control hold signal output terminal Not used (open)
41	M-RESET	O	Micom reset signal output to the liquid crystal display driver (IC601) “L”: reset
42	XLT	O	Serial data latch pulse output terminal Not used (open)
43	XRST	O	CD reset signal output to the CXD3017Q (IC101) and BA5974FM (IC102) “L”: reset
44	LOAD-IN	O	Turn motor control signal output to the BA6956AN (IC701)

Pin No.	Pin Name	I/O	Description
45	LOAD-OUT	O	Turn motor control signal output to the BA6956AN (IC701)
46	OPEN-SW	I	Tray open detect signal input terminal "L": open
47	CLOSE-SW	I	Tray close detect signal input terminal "L": close
48	BU UP/DOWN-SW	O	Pick-up up/down detect signal input terminal
49	T-SENS	I	CD table detect signal input from the RPI-321 (IC711)
50	NC	—	Not used (fixed at "L")
51	A-TRIG	O	Deck-A trigger plunger on/off control signal output "H": plunger on
52	B-TRIG	O	Deck-B trigger plunger on/off control signal output "H": plunger on
53	AMS-IN	I	AMS signal input terminal "L": AMS in
54	CAPM-H/L	O	High/normal speed selection signal output of the capstan motor "H": normal speed, "H": high speed
55	CAPM-CONTROL	O	Capstan motor on/off control signal output terminal "H": motor on
56	A-PLAY	I	Detection input from the Deck-A play detect switch "H": deck-A play
57	B-PLAY	I	Detection input from the Deck-B play detect switch "H": deck-B play
58	TC-MUTE	O	Tape deck line muting on/off control output to the HA12226F (IC301) "H": muting on
59	$\overline{\text{REC}}$/$\overline{\text{PB}}$/PAS	I	Recording/playback/pass selection signal input from the HA12226F (IC301) "L": recording mode, "Z": playback mode, "H": pass mode
60	NR-ON/$\overline{\text{OFF}}$	O	Dolby NR on/off selection signal output to the HA12226F (IC301) "H": dolby on, "L": dolby off
61	$\overline{\text{REC-MUTE}}$	O	Recording muting on/off control signal output to the HA12226F (IC301) "H": muting on
62	VCC	—	Power supply terminal (+5V)
63	SOFT TEST	O	Soft check terminal Not used (open)
64	VSS	—	Ground terminal
65	BIAS	O	Recording bias on/off control signal output to the HA12226F (IC301) "H": bias on, "L": bias off
66	EQ-H/$\overline{\text{N}}$	O	EQ high/normal selection signal output to the HA12226F (IC301) "H": high, "L": normal
67	PB-$\overline{\text{A}}$/B	O	Deck-A/B selection signal output to the HA12226F (IC301) "L": deck-A, "H": deck-B
68	$\overline{\text{ALC}}$	O	ALC on/off control signal output to the HA12226F (IC301) "L": ALC on, "H": ALC off
69	TC-RELAY	O	Tape deck relay on/off control signal output to the μPC1330H (IC302)
70	A-HALF	I	Detection input from the deck-A half detect switch "L": cassette in, "H": no cassette
71	NC	—	Not used (fixed at "L")
72	NC	—	Not used (fixed at "L")
73	DISPLAY KEY	I	Display key input terminal S752 (DISPLAY)
74	POWER KEY	I	Power key input terminal S796 (I/⏻)
75	STBY LED	O	STANDBY LED on/off control signal output terminal "H": LED on, "L": LED off
76	NC	—	Not used (fixed at "L")
77	NC	—	Not used (fixed at "L")
78	GAME/$\overline{\text{VIDEO}}$	O	Game/video selection signal output to the BU4052BCF (IC105) "H": game in, "L": video in
79	DBFB ON/$\overline{\text{OFF}}$	O	DBFB on/off control signal output terminal "H": DBFB on, "L": BDFB off
80	GEQ DATA	O	Data output for the graphic equalizer IC (IC101)
81	GEQ CLK	O	Clock output for the graphic equalizer IC (IC101)
82	LINE-MUTE	O	Audio line muting on/off control signal output terminal "H": muting on
83	STK-MUTE	O	Muting on/off control signal output to the power AMP "H": muting on

Pin No.	Pin Name	I/O	Description
84	STBY-RELAY	O	Standby relay on/off control signal output to the RY971 “H”: relay on
85	REAR-RELAY	O	Rear speaker relay on/off control signal output to the STA. AMP (TA-DX80) “H”: relay on
86	SURR-RELAY	O	Surround speaker relay on/off control signal output terminal “H”: relay on Not used (open)
87	FRONT-RELAY	O	Front speaker relay on/off control signal output to the RY801 “H”: relay on
88	$\overline{\text{PROTECT}}$	I	Speaker protect signal input terminal “L”: protect on
89	A-SHUT	I	Shut off detection signal input from the deck-A side reel pulse detector
90	B-SHUT	I	Shut off detection signal input from the deck-B side reel pulse detector
91	B-HALF	I	Detection input from the deck-B half detect switch “L”: cassette in, “H”: no cassette
92	MODEL-IN	I	Model select signal input terminal
93	SPEC-IN	I	Version select signal input terminal
94	FREQ-B	O	Frequency control signal output to the Booster AMP (TA-DX80)
95	FREQ-A	O	Frequency control signal output to the Booster AMP (TA-DX80)
96	AVSS	—	Ground terminal (for analog)
97	BOOSTER-SW	I	Booster encoder signal input from the satellite AMP (TA-DX80)
98	VREF	—	Analog reference voltage terminal
99	AVCC	—	Power supply terminal (+5V) (for analog)
100	AC CUT	I	AC power off detection signal input from the reset signal generator (IC502)

• **PANEL BOARD IC601 MB90M407PF-G-107-BND (DISPLAY CONTROL)**

Pin No.	Pin Name	I/O	Description
1 to 5	G5 to G1	O	FL grid drive signal output
6 to 10	P1 to P5	O	FL segment drive signal output
11	VSS IO	—	Ground terminal (VSS for I/O)
12 to 22	P6 to P16	O	FL segment drive signal output
23	XDD-FIP	—	Power supply terminal (+3.3V) (VDD for FL Tube)
24 to 41	P17 to P34	O	FL segment drive signal output
42	VSS IO	—	Ground terminal (VSS for I/O)
43 to 47	P35 to P39	O	FL segment drive signal output
48	VKK	—	–32V driving power for FL
49	MD0	I	Micom operating mode terminal (fixed at “H”)
50	MD1/VDD-VFT	I	Micom operating mode terminal (fixed at “H”)
51	MD2	—	Micom operating mode terminal (fixed at “L”)
52	REC/PAUSE LED	O	REC PAUSE/START LED on/off control signal output terminal “H”: LED on, “L”: LED off
53	ENTER LED	O	ENTER LED on/off control signal output terminal “H”: LED on, “L”: LED off
54	TAPE A/B LED	O	TAPE A/B LED on/off control signal output terminal “H”: LED on, “L”: LED off
55	TUNER LED	O	TUNER/BAND LED on/off control signal output terminal “H”: LED on, “L”: LED off
56	MD/VIDEO LED	O	MD (VIDEO) LED on/off control signal output terminal “H”: LED on, “L”: LED off
57	CD/VCD LED	O	CD LED on/off control signal output terminal “H”: LED on, “L”: LED off
58	GAME IN LED	O	GAME LED on/off control signal output terminal “H”: LED on, “L”: LED off
59	DISC 1 LED	O	DISC 1 LED on/off control signal output terminal “H”: LED on, “L”: LED off
60	IIC DATA	I/O	Data input/output terminal for the IIC bus
61	IIC CLOCK	I/O	Shift clock signal input/output terminal for the IIC bus
62	AVCC	—	Power supply terminal (+3.3V) (for A/D)
63	AVSS	—	Ground terminal (for A/D)
64	KEY0	I	Key input terminal (A/D input) S768 to S781 (PLAY MODE, REPEAT, EDIT, MUSIC EQ, MOVIE EQ, ▲, ENTER, ▼, P FILE, GROOVE, SURROUND, ◁ ▷, ❚❚, ▶▶ keys input)
65	KEY1	I	Key input terminal (A/D input) S752 to S767 (DISPLAY, ▶, ◀, SPECTRUM, EFECT on/off, GAME EQ, KARAOKE PON, PICTURE EFECT, ◀◀–, ❙◀◀, ■, CD SYNC HI-DUB, REC PAUSE/START, ▶▶+, REW, FF keys input)
66	KEY2	I	KEY input terminal (A/D input) S791 to S796 (⏏ OPEN/CLOSE (CD), DISC SKIP/EX-CHANGE, DISC3, DISC2, DISC1, I/⏻ keys input)
67 to 70	BPF4 to 1	I	Band-pass filter input from the BA3830F (IC602)
71	SUPER LOW FREQUENCY (BPF0)	I	Band-pass filter input from the BA3830F (IC602)
72	BPF5	I	Band-pass filter input from the BA3830F (IC602)
73	ALL BAND	I	All band (L+R) Band-pass filter input from the BA3830F (IC602)
74	DISC 2 LED	O	DISC 2 LED on/off control signal output terminal “H”: LED on, “L”: LED off
75	DISC 3 LED	O	DISC 3 LED on/off control signal output terminal “H”: LED on, “L”: LED off
76	VIDEO SWITCH	O	VIDEO/GAME selection signal output terminal Not used (open) “H”: VIDEO
77	RESET	I	Reset signal input from the system control (IC501)
78	HEADPHONE	I	Headphone detect signal input terminal “H”: Headphone Yes, “L”: Headphone No
79	VOL 1B	I	Jog dial pulse input from the rotary encoder (IC751 VOLUME) B phase input
80	VOL 1A	I	Jog dial pulse input from the rotary encoder (IC751 VOLUME) A phase input
81	VSS-CPU	—	Ground terminal (+3.3V) (VSS for CPU)

Pin No.	Pin Name	I/O	Description
82	XOUT	O	System clock output terminal (4MHz)
83	XIN	I	System clock input terminal (4MHz)
84	VCC-CPU	—	Power supply terminal (+3.3V) (VCC for CPU)
85 to 91	NO USE	I	Not used (open)
92	SOFT TEST	O	Soft test terminal Not used (open)
93 to 100	G13 to G6	O	FL grid drive signal output

SECTION 7
EXPLODED VIEWS

NOTE:
- -XX and -X mean standardized parts, so they may have some difference from the original one.
- Color Indication of Appearance Parts
  Example:
  KNOB, BALANCE (WHITE) . . . (RED)
  ↑ Parts Color ↑ Cabinet's Color

- Items marked "*" are not stocked since they are seldom required for routine service. Some delay should be anticipated when ordering these items.
- The mechanical parts with no reference number in the exploded views are not supplied.
- Accessories and packing materials are given in the last of the electrical parts list.
- Hardware (# mark) list is given in the last of the electrical parts list.

The components identified by mark ⚠ or dotted line with mark ⚠ are critical for safety.
Replace only with part number specified.

- Abbreviation
  E3 : 240 V AC Area in E model
  E91 : 220 V AC Area in E model
  EA : Saudi Arabia model
  IA : Indonesia model
  SP2/6: Malaysia, Singapore model

7-1. CABINET SECTION

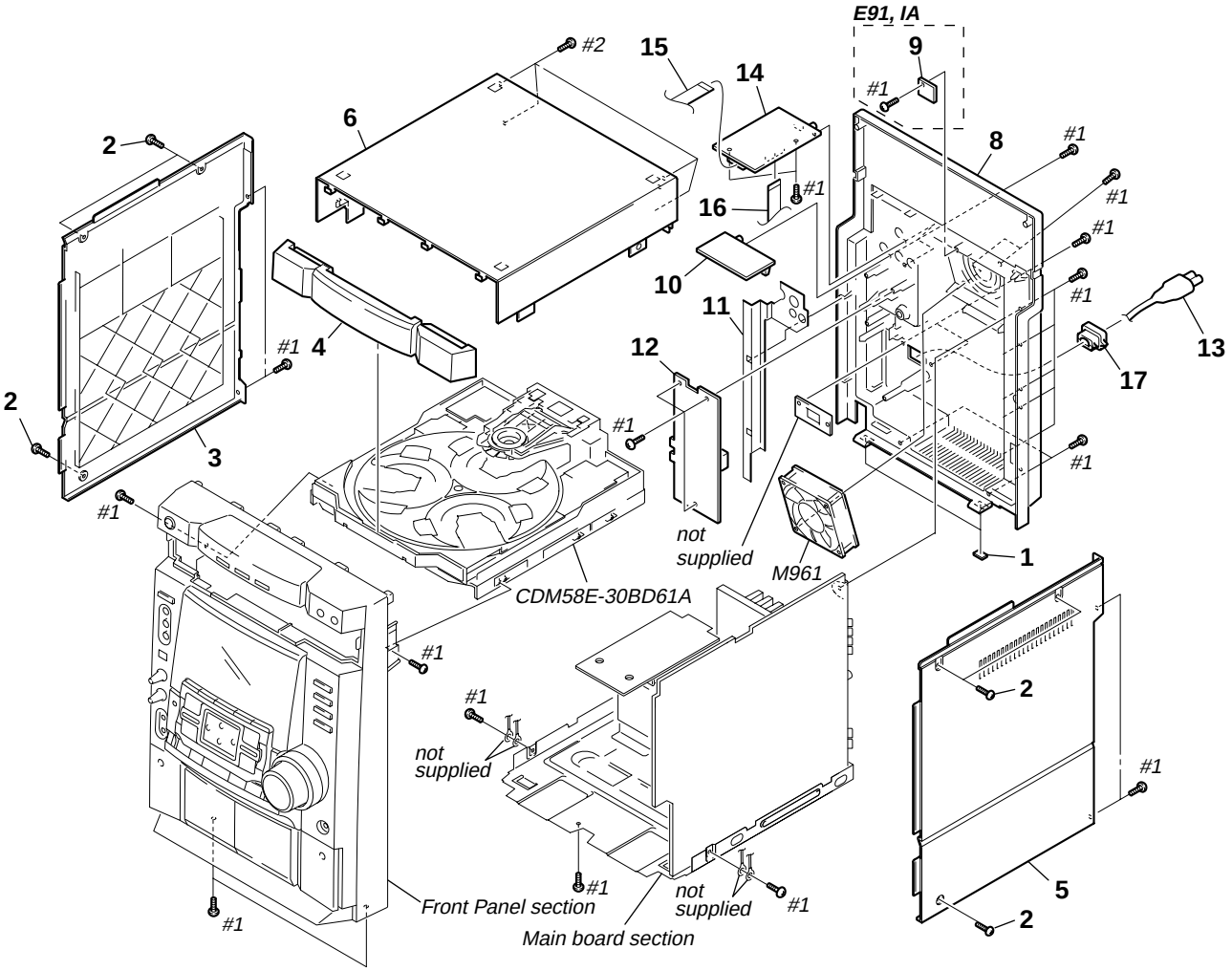

Ref. No.	Part No.	Description	Remark
1	4-225-252-01	CUSHION (FOOT)	
2	3-363-099-41	SCREW (CASE 3 TP2)	
3	4-225-038-22	SIDE PANEL (L) (EXCEPT IA)	
3	4-225-038-32	SIDE PANEL (L) (IA)	
4	4-231-563-51	LOADING PANEL (EXCEPT E91)	
4	4-231-563-91	LOADING PANEL (E91)	
5	4-225-039-72	SIDE PANEL (R) (EXCEPT IA)	
5	4-225-039-82	SIDE PANEL (R) (IA)	
6	4-224-550-01	CASE (TOP) (IA)	
6	4-224-550-41	CASE (TOP) (EXCEPT IA)	
8	4-232-028-21	BACK PANEL (EXCEPT E91)	
8	4-232-028-41	BACK PANEL (E91)	
9	1-681-143-11	SENSOR BOARD (E91, IA)	
10	1-680-892-11	VIDEO SWITCH BOARD	
11	4-233-148-01	GROUND PLATE	
12	A-4476-114-A	SUB TRANS BOARD, COMPLETE (E3, EA, SP2/6)	
12	A-4476-773-A	SUB TRANS BOARD, COMPLETE (IA)	
12	A-4725-809-A	SUB TRANS BOARD, COMPLETE (E91)	
⚠13	1-757-852-11	CORD, CONNECTION	
14	A-4725-689-A	VIDEO BOARD, COMPLETE (EA, SP2/6, E3)	
14	A-4725-691-A	VIDEO BOARD, COMPLETE (IA)	
14	A-4725-771-A	VIDEO BOARD, COMPLETE (E91)	
15	1-690-589-31	WIRE (FLAT TYPE) (13 CORE) (EXCEPT E91)	
15	1-769-987-11	WIRE (FLAT TYPE) (13 CORE) (E91)	
16	1-757-421-11	WIRE (FLAT TYPE) (25 CORE)	
17	3-703-571-11	BUSHING (S) (4516), CORD (E3)	
17	4-966-266-01	BUSHING (S) (FBS002), CORD (IA)	
17	3-703-244-00	BUSHING (2104), CORD (EA, SP2/6, E91)	
M961	1-763-072-11	FAN, D.C.	

7-2. FRONT PANEL SECTION

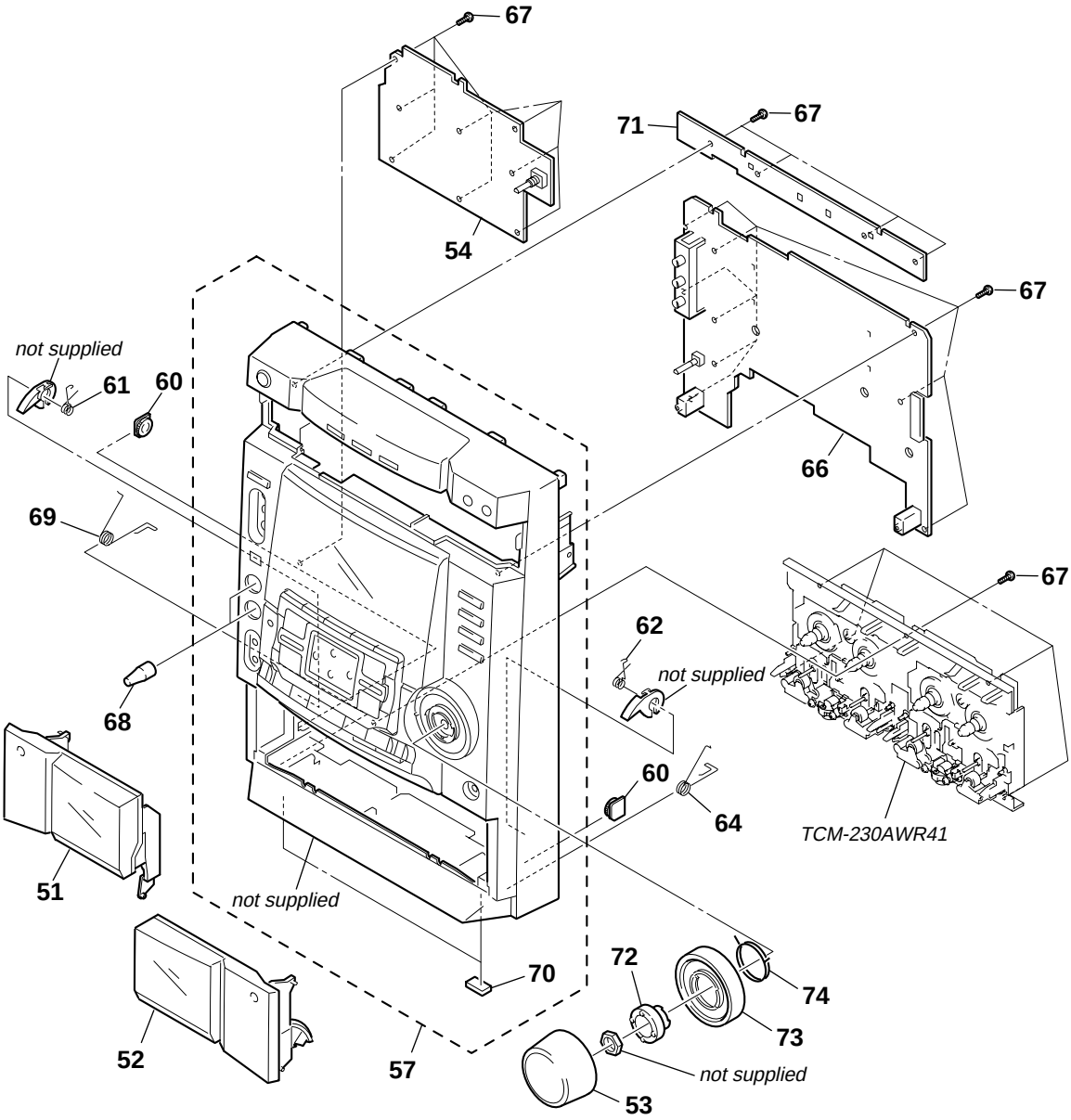

Ref. No.	Part No.	Description	Remark
51	X-4953-360-1	CASSETTE HOLDER (L) ASSY	
52	X-4953-412-1	CASSETTE HOLDER (R) ASSY	
53	4-231-571-01	KNOB (VOLUME)	
54	A-2007-995-A	PAD SWITCH BOARD, COMPLETE (IA)	
54	A-4476-103-A	PAD SWITCH BOARD, COMPLETE	(E3, EA, SP2/6)
54	A-4725-803-A	PAD SWITCH BOARD, COMPLETE (E91)	
57	X-4953-537-1	FRONT PANEL ASSY	
60	4-224-104-11	DAMPER	
61	4-231-836-01	SPRING (HEART CAM-A)	
62	4-231-841-01	SPRING (HEART CAM-B)	
64	4-231-587-01	SPRING R	

Ref. No.	Part No.	Description	Remark
66	A-4476-126-A	PANEL BOARD, COMPLETE (E3, EA, SP2/6)	
66	A-2007-986-A	PANEL BOARD, COMPLETE (IA)	
66	A-4725-782-A	PANEL BOARD, COMPLETE (E91)	
67	4-951-620-01	SCREW (2.6X8), +BVTP	
68	4-231-805-01	KNOB (MIC)	
69	4-231-586-01	SPRING L	
70	4-225-252-01	CUSHION (FOOT)	
71	1-680-263-11	CD-SW BOARD	
72	4-225-531-01	BRACKET (RING)	
73	4-231-589-01	RING (FR)	
74	4-224-800-01	SPRING (JOG, TORSION)	

7-3. MAIN BOARD SECTION

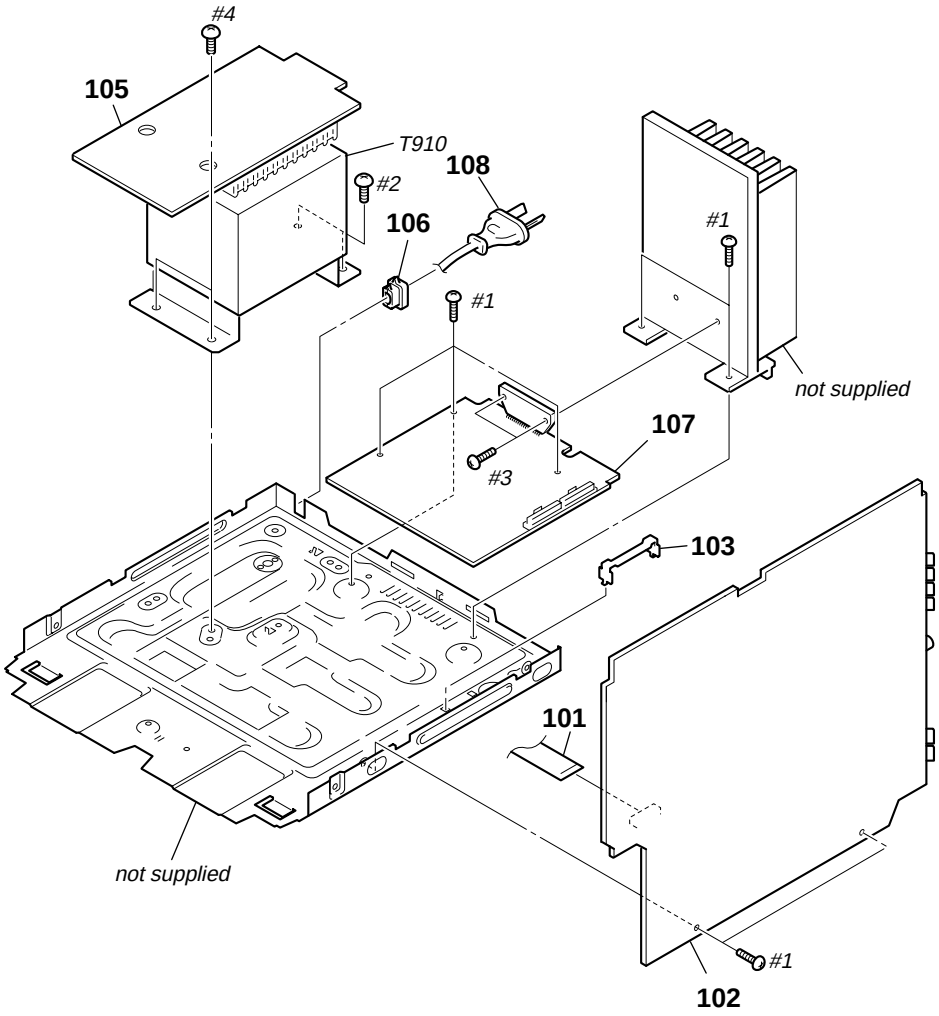

The components identified by mark ⚠ or dotted line with mark ⚠ are critical for safety.
Replace only with part number specified.

Ref. No.	Part No.	Description	Remark
101	1-773-045-11	WIRE (FLAT TYPE) (17 CORE)	
102	A-2007-981-A	MAIN BOARD, COMPLETE (EA)	
102	A-2007-988-A	MAIN BOARD, COMPLETE (IA)	
102	A-4476-130-A	MAIN BOARD, COMPLETE (SP2/6, E3)	
102	A-4725-784-A	MAIN BOARD, COMPLETE (E91)	
* 103	4-988-533-01	HOLDER, PWB	
105	1-680-265-11	MAIN TRANS BOARD	
* 106	3-703-244-00	BUSHING (2104), CORD	
107	A-4475-766-A	POWER AMPLIFIER BOARD, COMPLETE (EA, E3, SP2/6)	
107	A-4476-338-A	POWER AMPLIFIER BOARD, COMPLETE (IA)	
107	A-4725-790-A	POWER AMPLIFIER BOARD, COMPLETE (E91)	
⚠108	1-777-071-51	CORD, POWER	
⚠T910	1-437-356-11	POWER TRANSFORMER	

7-4. CD MECHANISM DECK SECTION (CDM58E-30BD61A)

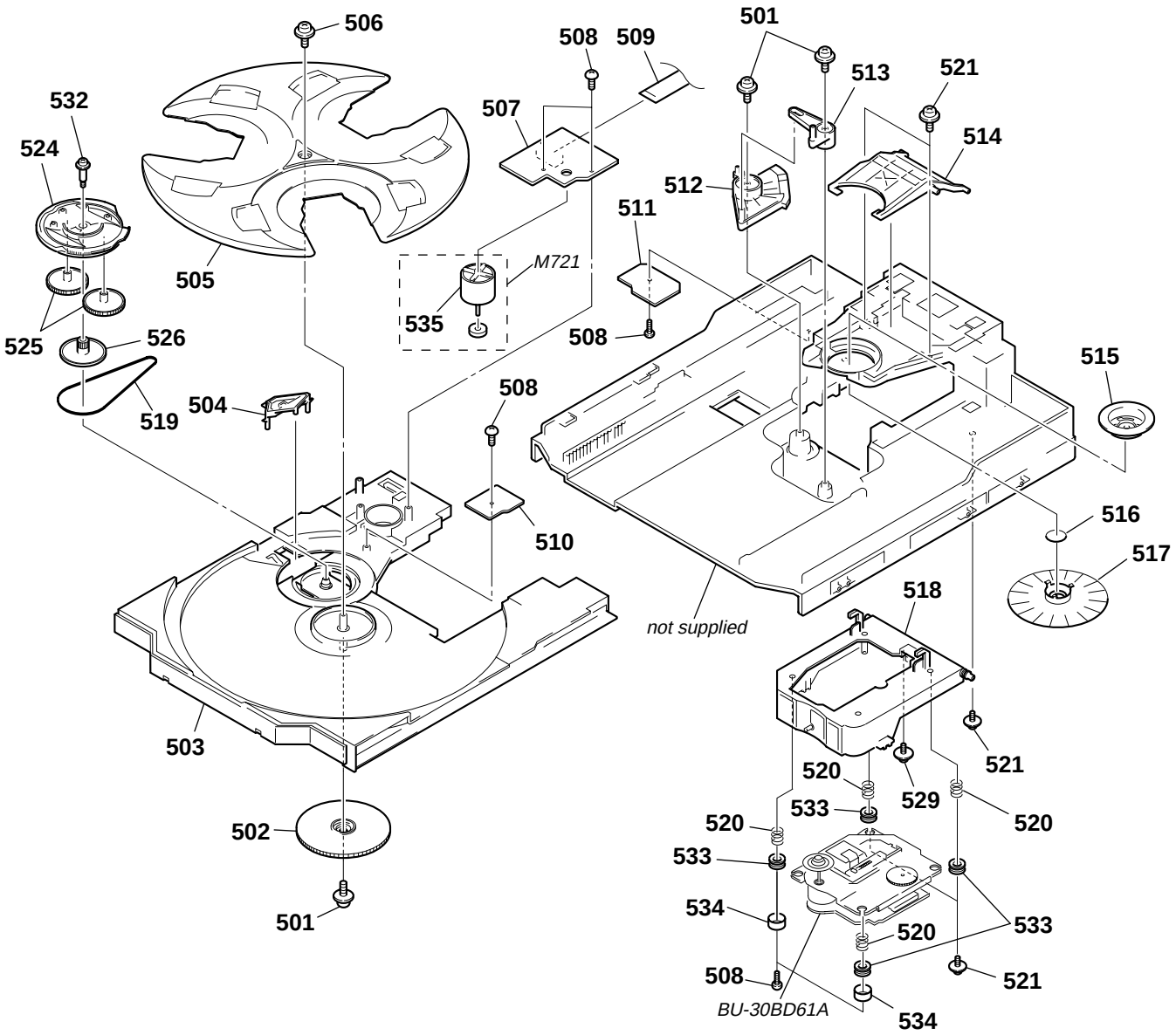

Ref. No.	Part No.	Description	Remark
501	4-933-134-11	SCREW (+PTPWH M2.6X8)	
502	4-221-679-01	CAM (RELAY)	
503	4-231-452-01	TABLE (NEW)	
504	4-221-686-01	LEVER (CHANGE)	
505	4-221-676-02	TRAY	
506	4-933-134-51	SCREW (+PTPWH 2.6X8)	
507	1-675-910-14	MOTOR BOARD	
508	4-951-620-01	SCREW (2.6X8), +BVTP	
509	1-791-983-12	WIRE (FLAT TYPE) (8 CORE)	
510	1-675-911-14	ADDRESS SENSOR BOARD	
511	1-675-912-14	DRIVER BOARD	
512	X-4952-608-3	CAM (U/D) ASSY	
513	4-221-681-01	LEVER (EX)	
514	4-221-682-01	LEVER (LIFTER)	
515	4-231-513-01	PULLEY (B) (BU-30), CHUCKING	

Ref. No.	Part No.	Description	Remark
516	4-228-414-01	BRACKET (YOKE)	
517	X-4953-307-1	PULLEY (A) ASSY, CHUCKING	
518	X-4953-306-1	HOLDER (BU) (BU-30) ASSY	
519	4-222-095-01	BELT	
520	4-227-045-11	SPRING (INSULATOR), COIL	
521	4-985-672-01	SCREW (+PTPWH M2.6), FLOATING	
524	4-221-678-06	CAM (CONTROL)	
525	4-221-683-01	GEAR (U)	
526	4-221-685-01	PULLEY (S)	
529	4-227-899-01	SCREW (DIA. 12), FROATING	
532	4-222-097-01	SCREW, STEP	
533	4-231-451-01	INSULATOR (BU-30)	
534	4-231-151-01	STOPPER (BU)	
535	1-541-632-12	MOTOR, DC (TURN)	
M721	A-4672-826-A	MOTOR ASSY (TURN)	

7-5. BASE UNIT SECTION (BU-30BD61A)

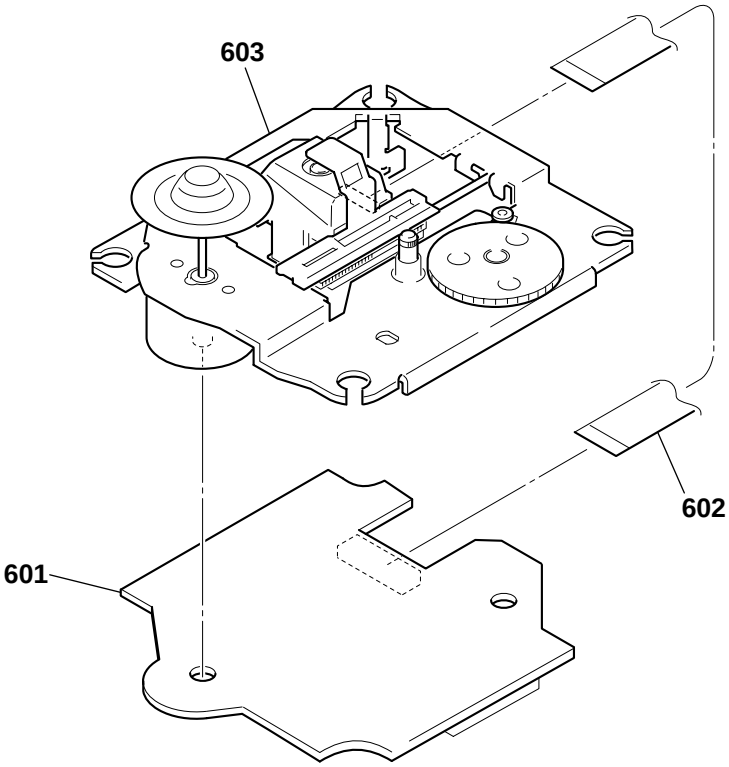

The components identified by mark ⚠ or dotted line with mark ⚠ are critical for safety.
Replace only with part number specified.

Ref. No.	Part No.	Description	Remark	Ref. No.	Part No.	Description	Remark
601	A-4725-561-A	BD BOARD, COMPLETE		⚠603	A-4735-189-A	BU-30 (61) ASSY	
602	1-782-817-11	WIRE (FLAT TYPE) (16 CORE)					

7-6. TAPE MECHANISM DECK SECTION-1 (TCM-230AWR41)

Note: *Two different types of tape mechanism are used depending on models. They maintain compatibility as an entire mechanism even though there are some different parts are used.*

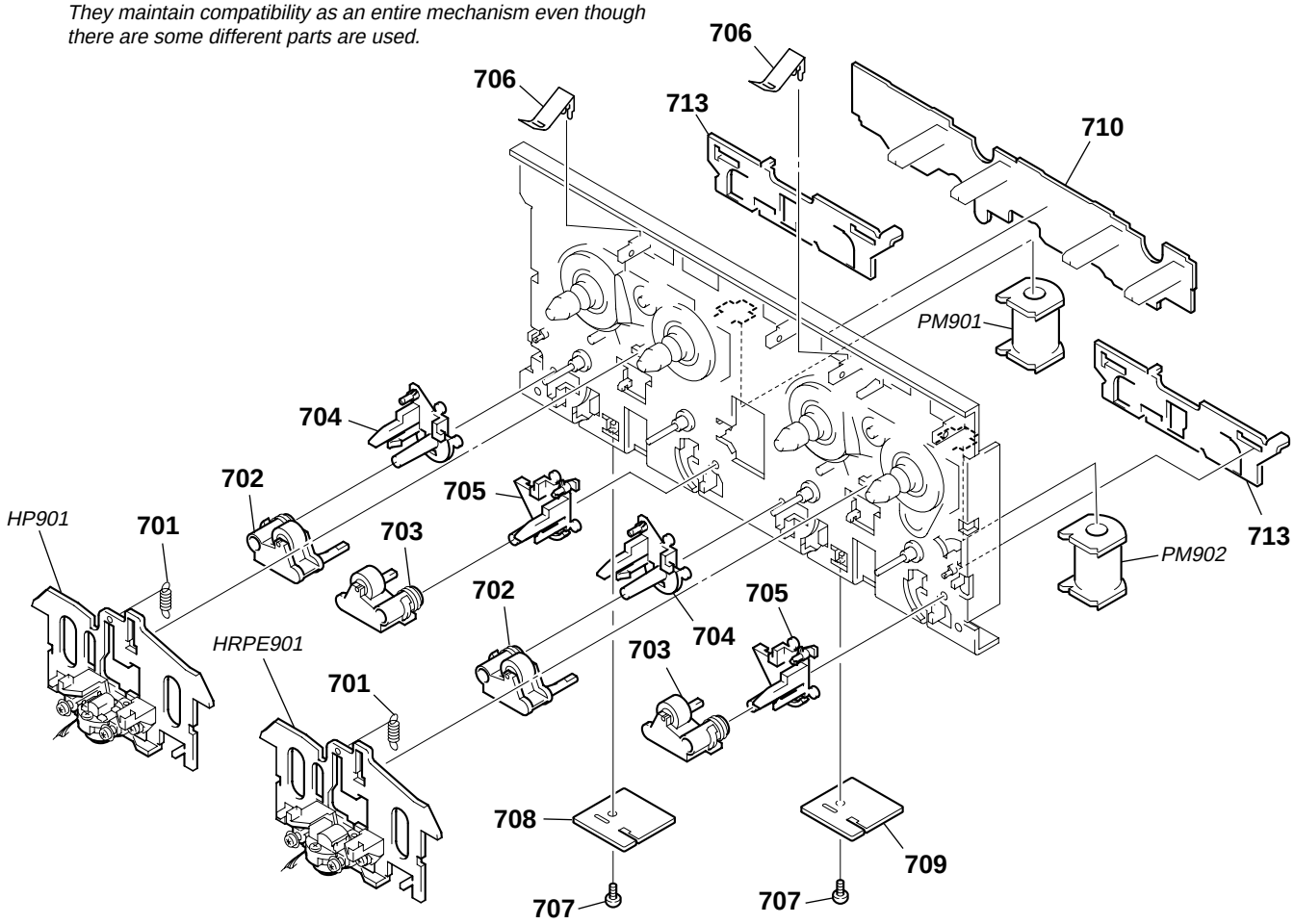

Ref. No.	Part No.	Description	Remark
701	3-016-574-11	SPRING (HEAD), TENSION	
702	3-016-565-01	BASE (PINCH LEVER REV)	
703	3-016-564-01	BASE (PINCH LEVER FWD)	
704	X-3374-156-4	PINCH LEVER (REV) ASSY	
705	X-3374-155-4	PINCH LEVER (FWD) ASSY	
706	4-229-083-01	SPRING (CASSETTE), LEAF	
707	4-227-872-11	SCREW (+PTT 2X4), GROUND POINT	
708	1-676-220-11	HEAD (A) BOARD	
709	1-676-221-11	HEAD (B) BOARD	
710	A-2007-838-A	LEAF SW BOARD, COMPLETE	
713	3-016-566-01	SLIDER, REVERSE	
HP901	A-2004-771-A	BASE (A) ASSY, HEAD	
HRP901	A-2004-772-A	BASE (B) ASSY, HEAD	
PM901	1-454-887-32	SOLENOID, PLUNGER	
PM902	1-454-887-32	SOLENOID, PLUNGER	

7-7. TAPE MECHANISM DECK SECTION-2 (TCM-230AWR41)

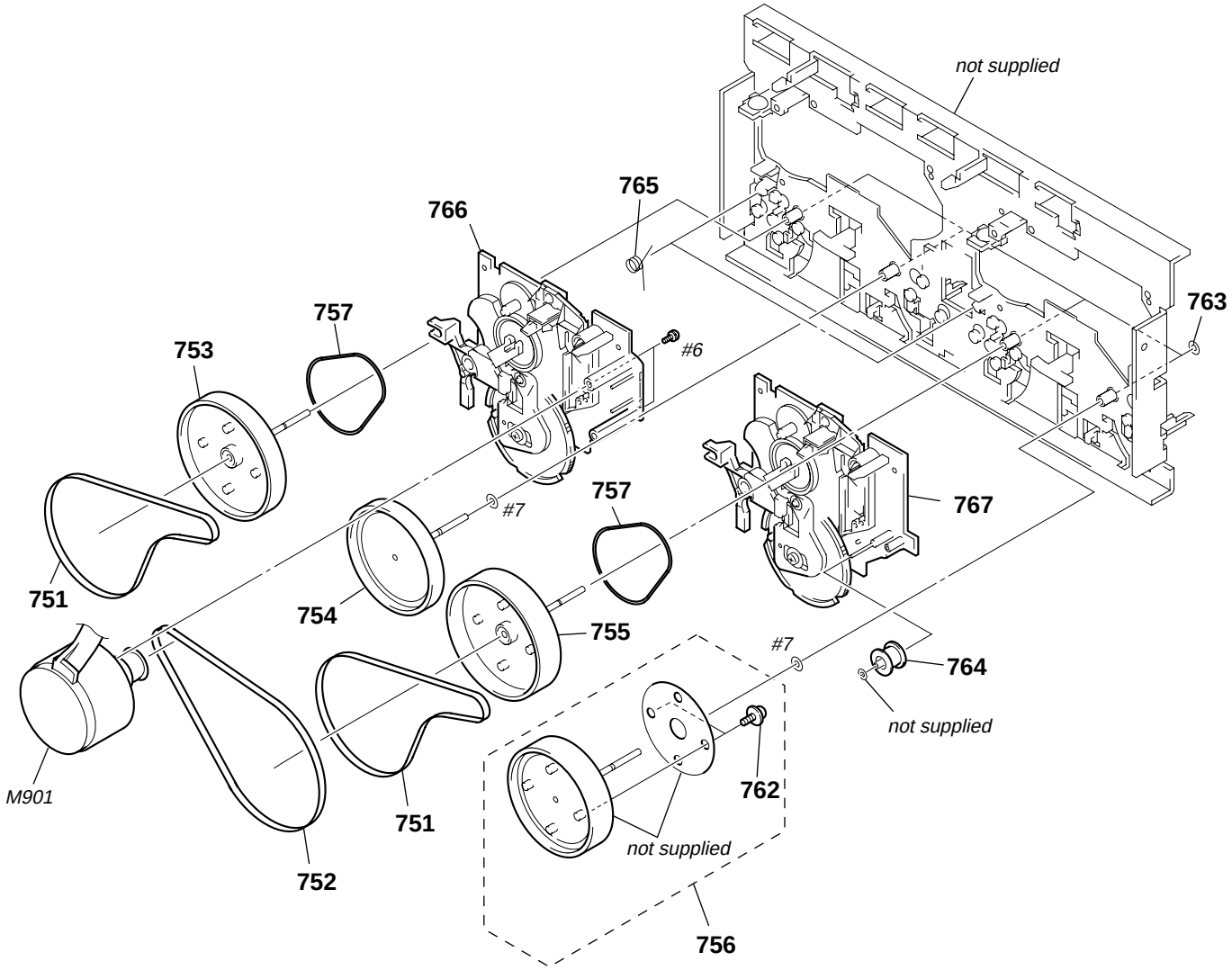

Ref. No.	Part No.	Description	Remark	Ref. No.	Part No.	Description	Remark
751	3-041-946-01	BELT (CAPSTAN B)		762	3-318-203-62	SCREW (B1.7X4), TAPPING	
752	4-227-239-01	BELT (CAPSTAN C)		763	3-019-208-01	WASHER, STOPPER	
753	X-3378-042-1	FLYWHEEL (B-FWD) ASSY		764	3-040-580-11	PULLEY (TENSION)	
754	X-3378-043-1	FLYWHEEL (B-REV) ASSY		765	4-228-450-11	SPRING (REVERSE SLIDER), TORSION	
755	X-3378-040-1	FLYWHEEL (A-FWD) ASSY		766	A-2004-793-A	CHASSIS (A) ASSY, SUB	
756	X-3378-041-1	FLYWHEEL (A-REV) ASSY		767	A-2004-794-A	CHASSIS (B) ASSY, SUB	
757	3-041-947-01	BELT (FR)		M901	X-3378-241-1	MOTOR ASSY (CAPSTAN)	

SECTION 8
ELECTRICAL PARTS LIST

ADDRESS SENSOR

BD

NOTE:
- Due to standardization, replacements in the parts list may be different from the parts specified in the diagrams or the components used on the set.
- -XX and -X mean standardized parts, so they may have some difference from the original one.
- RESISTORS
  All resistors are in ohms.
  METAL: Metal-film resistor.
  METAL OXIDE: Metal oxide-film resistor.
  F: nonflammable
- Items marked "*" are not stocked since they are seldom required for routine service. Some delay should be anticipated when ordering these items.
- SEMICONDUCTORS
  In each case, u: µ, for example:
  uA. . : µA. . uPA. . : µPA. .
  uPB. . : µPB. . uPC. . : µPC. .
  uPD. . : µPD. .
- CAPACITORS
  uF: µF
- COILS
  uH: µH

The components identified by mark ⚠ or dotted line with mark ⚠ are critical for safety.
Replace only with part number specified.

When indicating parts by reference number, please include the board.

- Abbreviation
  E3 : 240 V AC Area in E model
  E91 : 220 V AC Area in E model
  EA : Saudi Arabia model
  IA : Indonesia model
  SP2/6: Malaysia, Singapore model

Ref. No.	Part No.	Description			Remark
	1-675-911-14	ADDRESS SENSOR BOARD			
		**********			
		< CAPACITOR >			
C712	1-164-159-11	CERAMIC	0.1uF		50V
		< IC >			
IC711	8-749-014-38	PHOTO INTERRUPTER SG-264			
		< RESISTOR >			
R711	1-247-876-11	CARBON	75K	5%	1/4W
R712	1-249-409-11	CARBON	220	5%	1/4W
R713	1-249-429-11	CARBON	10K	5%	1/4W
		< SWITCH >			
S711	1-771-821-11	SWITCH, PUSH (1 KEY) (UP/DOWN)			
**********					
	A-4725-561-A	BD BOARD, COMPLETE			
		**********			
		< CAPACITOR >			
C101	1-163-133-00	CERAMIC CHIP	470PF	5%	50V
C102	1-164-004-11	CERAMIC CHIP	0.1uF	10%	25V
C103	1-163-133-00	CERAMIC CHIP	470PF	5%	50V
C104	1-162-967-11	CERAMIC CHIP	0.0033uF	10%	50V
C107	1-162-921-11	CERAMIC CHIP	33PF	5%	50V
C108	1-163-038-00	CERAMIC CHIP	0.1uF		25V
C109	1-163-038-00	CERAMIC CHIP	0.1uF		25V
C110	1-164-004-11	CERAMIC CHIP	0.1uF	10%	25V
C111	1-126-607-11	ELECT CHIP	47uF	20%	4V
C112	1-126-607-11	ELECT CHIP	47uF	20%	4V
C113	1-126-209-11	ELECT CHIP	100uF	20%	4V
C114	1-162-964-11	CERAMIC CHIP	0.001uF	10%	50V
C115	1-126-205-11	ELECT CHIP	47uF	20%	6.3V
C117	1-163-038-00	CERAMIC CHIP	0.1uF		25V
C118	1-164-346-11	CERAMIC CHIP	1uF		16V
C119	1-164-346-11	CERAMIC CHIP	1uF		16V
C120	1-126-607-11	ELECT CHIP	47uF	20%	4V
C151	1-163-037-11	CERAMIC CHIP	0.022uF	10%	25V
C153	1-163-038-00	CERAMIC CHIP	0.1uF		25V
C163	1-117-681-11	ELECT CHIP	100uF	20%	16V
C164	1-163-038-00	CERAMIC CHIP	0.1uF		25V
C165	1-124-779-00	ELECT CHIP	10uF	20%	16V
C166	1-163-038-00	CERAMIC CHIP	0.1uF		25V
C182	1-128-995-21	ELECT CHIP	100uF	20%	10V
C201	1-126-246-11	ELECT CHIP	220uF	20%	4V
C202	1-163-038-00	CERAMIC CHIP	0.1uF		25V
C205	1-163-038-00	CERAMIC CHIP	0.1uF		25V
C209	1-162-927-11	CERAMIC CHIP	100PF	5%	50V
C211	1-164-004-11	CERAMIC CHIP	0.1uF	10%	25V
C212	1-162-965-11	CERAMIC CHIP	0.0015uF	10%	50V
C213	1-162-967-11	CERAMIC CHIP	0.0033uF	10%	50V
C215	1-107-823-11	CERAMIC CHIP	0.47uF	10%	16V
C216	1-162-970-11	CERAMIC CHIP	0.01uF	10%	25V
C221	1-163-038-00	CERAMIC CHIP	0.1uF		25V
C222	1-163-038-00	CERAMIC CHIP	0.1uF		25V
C224	1-163-038-00	CERAMIC CHIP	0.1uF		25V
C226	1-163-038-00	CERAMIC CHIP	0.1uF		25V
C227	1-163-038-00	CERAMIC CHIP	0.1uF		25V
C228	1-164-346-11	CERAMIC CHIP	1uF		16V
C229	1-163-038-00	CERAMIC CHIP	0.1uF		25V
C231	1-128-995-21	ELECT CHIP	100uF	20%	10V
C234	1-162-968-11	CERAMIC CHIP	0.0047uF	10%	50V
C235	1-162-968-11	CERAMIC CHIP	0.0047uF	10%	50V
C236	1-107-823-11	CERAMIC CHIP	0.47uF	10%	16V
		< CONNECTOR >			
CN101	1-784-875-21	CONNECTOR, FFC (LIF (NON-ZIF)) 25P			
CN102	1-794-424-11	CONNECTOR, FCC/FPC 16P			
		< DIODE >			
D101	8-719-056-77	DIODE UDZ-TE-17-3.9B			
		< FERRITE BEAD >			
FB101	1-500-445-21	FERRITE	0uH		
		< IC >			
IC101	8-752-408-73	IC CXD3068Q			
IC102	8-759-713-70	IC AN41020A			
IC103	8-752-089-74	IC CXA2581N-T4			
IC106	8-759-834-29	IC MC74VHC1G04DFT1			
		< TRANSISTOR >			
Q101	8-729-049-31	TRANSISTOR	2SB710A-RTX		
Q103	8-729-920-85	TRANSISTOR	2SD1664-T100-QR		

BD **CD-SW** **DRIVER**

Ref. No.	Part No.	Description			Remark
		< RESISTOR >			
R102	1-216-077-00	RES-CHIP	15K	5%	1/10W
R103	1-216-097-11	RES-CHIP	100K	5%	1/10W
R104	1-216-077-00	RES-CHIP	15K	5%	1/10W
R105	1-216-049-11	RES-CHIP	1K	5%	1/10W
R111	1-216-099-00	METAL CHIP	120K	5%	1/10W
R113	1-216-059-00	METAL CHIP	2.7K	5%	1/10W
R114	1-216-102-00	RES-CHIP	160K	5%	1/10W
R115	1-216-085-91	RES-CHIP	33K	5%	1/10W
R116	1-216-085-91	RES-CHIP	33K	5%	1/10W
R118	1-216-295-11	SHORT	0		
R120	1-216-099-00	METAL CHIP	120K	5%	1/10W
R122	1-216-097-11	RES-CHIP	100K	5%	1/10W
R123	1-216-001-00	METAL CHIP	10	5%	1/10W
R124	1-216-797-11	METAL CHIP	10	5%	1/16W
R125	1-216-085-91	RES-CHIP	33K	5%	1/10W
R126	1-216-085-91	RES-CHIP	33K	5%	1/10W
R151	1-216-097-11	RES-CHIP	100K	5%	1/10W
R152	1-216-065-00	RES-CHIP	4.7K	5%	1/10W
R163	1-216-295-11	SHORT	0		
R164	1-216-295-11	SHORT	0		
R167	1-216-295-11	SHORT	0		
R168	1-216-295-11	SHORT	0		
R176	1-216-295-11	SHORT	0		
R179	1-216-864-11	METAL CHIP	0	5%	1/16W
R201	1-216-085-91	RES-CHIP	33K	5%	1/10W
R202	1-216-073-91	RES-CHIP	10K	5%	1/10W
R203	1-216-097-11	RES-CHIP	100K	5%	1/10W
R204	1-216-061-00	RES-CHIP	3.3K	5%	1/10W
R205	1-216-049-11	RES-CHIP	1K	5%	1/10W
R206	1-216-065-00	RES-CHIP	4.7K	5%	1/10W
R207	1-216-121-11	RES-CHIP	1M	5%	1/10W
R212	1-216-033-00	METAL CHIP	220	5%	1/10W
R215	1-216-295-11	SHORT	0		
R218	1-216-049-11	RES-CHIP	1K	5%	1/10W
R219	1-216-049-11	RES-CHIP	1K	5%	1/10W
R220	1-216-295-11	SHORT	0		
R221	1-216-033-00	METAL CHIP	220	5%	1/10W
R222	1-216-033-00	METAL CHIP	220	5%	1/10W
R223	1-216-025-11	RES-CHIP	100	5%	1/10W
R224	1-216-033-00	METAL CHIP	220	5%	1/10W
R225	1-216-033-00	METAL CHIP	220	5%	1/10W
R226	1-216-025-11	RES-CHIP	100	5%	1/10W
R227	1-216-097-11	RES-CHIP	100K	5%	1/10W
R228	1-216-113-00	METAL CHIP	470K	5%	1/10W
R229	1-216-057-00	METAL CHIP	2.2K	5%	1/10W
R230	1-216-295-11	SHORT	0		
R235	1-216-025-11	RES-CHIP	100	5%	1/10W
R236	1-216-025-11	RES-CHIP	100	5%	1/10W
R237	1-216-025-11	RES-CHIP	100	5%	1/10W
R239	1-216-035-00	METAL CHIP	270	5%	1/10W
R240	1-216-295-11	SHORT	0		
		< NETWORK RESISTOR >			
RN201	1-233-576-11	RES, CHIP NETWORK	100		
RN202	1-233-576-11	RES, CHIP NETWORK	100		

Ref. No.	Part No.	Description			Remark
		< VARIABLE RESISTOR >			
RV101	1-223-997-21	RES, CARBON ADJ VAR	47K		
**********					
	1-680-263-11	CD-SW BOARD			
		**********			
		< DIODE >			
D791	8-719-057-97	LED SEL5923A-TP15 (DISC 1)			
D792	8-719-057-97	LED SEL5923A-TP15 (DISC 2)			
D793	8-719-057-97	LED SEL5923A-TP15 (DISC 3)			
D794	8-719-071-44	LED SELS5223C-TP15 (I/⏻)			
		< TRANSISTOR >			
Q791	8-729-900-80	TRANSISTOR	BA1A4M-TP		
Q792	8-729-900-80	TRANSISTOR	BA1A4M-TP		
Q793	8-729-900-80	TRANSISTOR	BA1A4M-TP		
Q794	8-729-900-80	TRANSISTOR	BA1A4M-TP		
		< RESISTOR >			
R791	1-249-419-11	CARBON	1.5K	5%	1/4W
R792	1-249-421-11	CARBON	2.2K	5%	1/4W
R793	1-249-422-11	CARBON	2.7K	5%	1/4W
R794	1-249-424-11	CARBON	3.9K	5%	1/4W
R795	1-249-426-11	CARBON	5.6K	5%	1/4W
R796	1-249-410-11	CARBON	270	5%	1/4W
R798	1-249-409-11	CARBON	220	5%	1/4W
R799	1-249-409-11	CARBON	220	5%	1/4W
R800	1-249-417-11	CARBON	1K	5%	1/4W
R801	1-249-409-11	CARBON	220	5%	1/4W
		< SWITCH >			
S791	1-771-410-21	SWITCH, TACTILE (⏏ OPEN/CLOSE) (CD)			
S792	1-771-410-21	SWITCH, TACTILE (DISK SKIP/EX-CHANGE)			
S793	1-771-410-21	SWITCH, TACTILE (DISC 3)			
S794	1-771-410-21	SWITCH, TACTILE (DISC 2)			
S795	1-771-410-21	SWITCH, TACTILE (DISC 1)			
S796	1-771-410-21	SWITCH, TACTILE (I/⏻)			
**********					
	1-675-912-14	DRIVER BOARD			
		**********			
		< CAPACITOR >			
C702	1-126-964-51	ELECT	10uF	20%	50V
		< CONNECTOR >			
CN701	1-785-336-11	PIN, CONNECTOR (LIGHT ANGLE) 10P			
CN702	1-785-550-11	CONNECTOR, FFC/FPC 8P			
		< DIODE >			
D701	8-719-983-68	DIODE MTZJ-T-72-3.9A			
		< IC >			
IC701	8-759-598-69	IC BA6956AN			

DRIVER | HEAD (A) | HEAD (B) | LEAF SW | MAIN

Ref. No.	Part No.	Description			Remark
		< RESISTOR >			
R701	1-249-411-11	CARBON	330	5%	1/4W
R702	1-249-401-11	CARBON	47	5%	1/4W
**********					
	1-676-220-11	HEAD (A) BOARD			
		**********			
		< CONNECTOR >			
* CN1	1-564-719-11	PIN, CONNECTOR (SMALL TYPE) 3P			
**********					
	1-676-221-11	HEAD (B) BOARD			
		**********			
CN2	1-564-722-11	PIN, CONNECTOR (SMALL TYPE) 6P			
**********					
	A-2007-838-A	LEAF SW BOARD, COMPLETE			
		**********			
		< CAPACITOR >			
C1001	1-107-716-11	ELECT	33uF	20%	10V
		< CONNECTOR >			
CN1001	1-568-860-21	SOCKET, CONNECTOR 17P			
		< DIODE >			
D1001	8-719-911-19	DIODE 1SS133T-72			
D1002	8-719-911-19	DIODE 1SS133T-72			
		< IC >			
IC1001	8-749-014-38	PHOTO INTERRUPTER SG-264			
IC1002	8-749-014-38	PHOTO INTERRUPTER SG-264			
		< TRANSISTOR >			
Q1001	8-729-029-56	TRANSISTOR	DTA144ESA-TP		
		< RESISTOR >			
R907	1-247-879-11	CARBON	100K	5%	1/4W
R1001	1-249-409-11	CARBON	220	5%	1/4W
R1002	1-249-409-11	CARBON	220	5%	1/4W
R1003	1-249-414-11	CARBON	560	5%	1/4W
R1004	1-247-834-11	CARBON	1.3K	5%	1/4W
R1005	1-247-818-11	CARBON	300	5%	1/4W
R1006	1-247-864-11	CARBON	24K	5%	1/4W
R1007	1-247-780-00	CARBON	7.5	5%	1/4W
R1008	1-249-417-11	CARBON	1K	5%	1/4W
		< VARIABLE RESISTOR >			
RV1001	1-241-785-11	RES, ADJ, CARBON		10K	
RV1002	1-241-785-11	RES, ADJ, CARBON		10K	
		< SWITCH >			
S1001	1-570-953-11	SWITCH, PUSH (1 KEY) (A PLAY)			
S1002	1-570-953-11	SWITCH, PUSH (1 KEY) (B PLAY)			
S1003	1-771-333-11	SWITCH, LEAF (A.HALF)			
S1004	1-771-205-11	SWITCH, LEAF (A.$\overline{120}$/70)			
S1005	1-771-205-11	SWITCH, LEAF (REC.A)			
S1006	1-771-333-11	SWITCH, LEAF (B.HALF)			
S1008	1-771-205-11	SWITCH, LEAF (B.$\overline{120}$/70)			
S1009	1-771-205-11	SWITCH, LEAF (REC.B)			
**********					
	A-2007-981-A	MAIN BOARD, COMPLETE (EA)			
	A-2007-988-A	MAIN BOARD, COMPLETE (IA)			
	A-4725-784-A	MAIN BOARD, COMPLETE (E91)			
	A-4476-130-A	MAIN BOARD, COMPLETE (SP2/6, E3)			
		**********			
	7-685-646-79	SCREW +BVTP 3X8 TYPE2 N-S			
		< CAPACITOR >			
C1	1-162-974-11	CERAMIC CHIP	0.01uF		50V
C2	1-162-974-11	CERAMIC CHIP	0.01uF		50V
C3	1-104-660-91	ELECT	47uF	20%	16V
C4	1-162-974-11	CERAMIC CHIP	0.01uF		50V
C5	1-162-974-11	CERAMIC CHIP	0.01uF		50V
C7	1-216-864-11	METAL CHIP	0	5%	1/16W
C11	1-162-974-11	CERAMIC CHIP	0.01uF		50V
C12	1-104-660-91	ELECT	47uF	20%	16V
C13	1-162-974-11	CERAMIC CHIP	0.01uF		50V
C14	1-162-974-11	CERAMIC CHIP	0.01uF		50V
C15	1-162-974-11	CERAMIC CHIP	0.01uF		50V
C16	1-104-660-91	ELECT	47uF	20%	16V
C17	1-126-959-11	ELECT	0.47uF	20%	50V
C18	1-126-960-11	ELECT	1uF	20%	50V
C19	1-126-960-11	ELECT	1uF	20%	50V
C20	1-164-245-11	CERAMIC CHIP	0.015uF	10%	25V
C21	1-164-245-11	CERAMIC CHIP	0.015uF	10%	25V
C22	1-162-968-11	CERAMIC CHIP	0.0047uF	10%	50V
C23	1-164-360-11	CERAMIC CHIP	0.1uF		16V
C24	1-126-963-11	ELECT	4.7uF	20%	50V
C25	1-126-964-11	ELECT	10uF	20%	50V
C26	1-164-471-11	CERAMIC CHIP	680PF	5%	50V
C27	1-162-974-11	CERAMIC CHIP	0.01uF		50V
C28	1-126-963-11	ELECT	4.7uF	20%	50V
C29	1-162-974-11	CERAMIC CHIP	0.01uF		50V
C30	1-126-962-11	ELECT	3.3uF	20%	50V
C31	1-162-974-11	CERAMIC CHIP	0.01uF		50V
C32	1-126-963-11	ELECT	4.7uF	20%	50V
C34	1-162-967-11	CERAMIC CHIP	0.0033uF	10%	50V
C35	1-104-660-91	ELECT	47uF	20%	16V
C36	1-126-963-11	ELECT	4.7uF	20%	50V
C38	1-162-967-11	CERAMIC CHIP	0.0033uF	10%	50V
C39	1-164-361-11	CERAMIC CHIP	0.047uF		16V
C40	1-164-361-11	CERAMIC CHIP	0.047uF		16V
C41	1-164-227-11	CERAMIC CHIP	0.022uF	10%	25V
C42	1-162-940-11	CERAMIC CHIP	9PF	0.5PF	50V
C43	1-162-974-11	CERAMIC CHIP	0.01uF		50V
C46	1-162-974-11	CERAMIC CHIP	0.01uF		50V
C51	1-162-920-11	CERAMIC CHIP	27PF	5%	50V
C52	1-162-920-11	CERAMIC CHIP	27PF	5%	50V
C53	1-162-964-11	CERAMIC CHIP	0.001uF	10%	50V
C55	1-162-964-11	CERAMIC CHIP	0.001uF	10%	50V
C56	1-162-974-11	CERAMIC CHIP	0.01uF		50V
C57	1-104-660-91	ELECT	47uF	20%	16V

MAIN

Ref. No.	Part No.	Description			Remark
C58	1-126-961-11	ELECT	2.2uF	20%	50V
C59	1-162-974-11	CERAMIC CHIP	0.01uF		50V
C60	1-104-660-91	ELECT	47uF	20%	16V
C61	1-162-974-11	CERAMIC CHIP	0.01uF		50V
C62	1-126-959-11	ELECT	0.47uF	20%	50V
C63	1-162-974-11	CERAMIC CHIP	0.01uF		50V
C69	1-162-974-11	CERAMIC CHIP	0.01uF		50V
C101	1-162-960-11	CERAMIC CHIP	220PF	10%	50V
C102	1-126-961-11	ELECT	2.2uF	20%	50V
C103	1-126-964-11	ELECT	10uF	20%	50V
C104	1-126-964-11	ELECT	10uF	20%	50V
C105	1-126-964-11	ELECT	10uF	20%	50V
C106	1-136-161-00	FILM	0.047uF	5%	50V
C107	1-136-495-11	FILM	0.068uF	5%	50V
C108	1-136-495-11	FILM	0.068uF	5%	50V
C109	1-162-969-11	CERAMIC CHIP	0.0068uF	10%	25V
C110	1-162-969-11	CERAMIC CHIP	0.0068uF	10%	25V
C111	1-164-172-11	CERAMIC CHIP	0.0056uF	10%	25V
C112	1-126-961-11	ELECT	2.2uF	20%	50V
C113	1-126-957-11	ELECT	0.22uF	20%	50V
C115	1-136-169-00	FILM	0.22uF	5%	50V
C116	1-136-169-00	FILM	0.22uF	5%	50V
C117	1-126-964-11	ELECT	10uF	20%	50V
C118	1-126-961-11	ELECT	2.2uF	20%	50V
C121	1-126-964-11	ELECT	10uF	20%	50V
C122	1-126-964-11	ELECT	10uF	20%	50V
C123	1-126-964-11	ELECT	10uF	20%	50V
C124	1-164-156-11	CERAMIC CHIP	0.1uF		25V
C127	1-126-961-11	ELECT	2.2uF	20%	50V
C129	1-126-963-11	ELECT	4.7uF	20%	50V
C131	1-136-169-00	FILM	0.22uF	5%	50V
C132	1-126-964-11	ELECT	10uF	20%	50V
C133	1-126-935-11	ELECT	470uF	20%	10V
C134	1-164-156-11	CERAMIC CHIP	0.1uF		25V
C135	1-126-964-11	ELECT	10uF	20%	50V
C136	1-126-964-11	ELECT	10uF	20%	50V
C139	1-126-935-11	ELECT	470uF	20%	10V
C140	1-164-156-11	CERAMIC CHIP	0.1uF		25V
C141	1-162-947-11	CERAMIC CHIP	33PF	5%	50V
C142	1-164-156-11	CERAMIC CHIP	0.1uF		25V
C144	1-126-964-11	ELECT	10uF	20%	50V
C146	1-126-935-11	ELECT	470uF	20%	10V
C149	1-162-962-11	CERAMIC CHIP	470PF	10%	50V
C150	1-162-962-11	CERAMIC CHIP	470PF	10%	50V
C151	1-162-960-11	CERAMIC CHIP	220PF	10%	50V
C152	1-126-961-11	ELECT	2.2uF	20%	50V
C153	1-126-964-11	ELECT	10uF	20%	50V
C154	1-126-964-11	ELECT	10uF	20%	50V
C155	1-126-964-11	ELECT	10uF	20%	50V
C156	1-136-161-00	FILM	0.047uF	5%	50V
C157	1-136-495-11	FILM	0.068uF	5%	50V
C158	1-136-495-11	FILM	0.068uF	5%	50V
C159	1-162-969-11	CERAMIC CHIP	0.0068uF	10%	25V
C160	1-162-969-11	CERAMIC CHIP	0.0068uF	10%	25V
C161	1-164-172-11	CERAMIC CHIP	0.0056uF	10%	25V
C162	1-126-961-11	ELECT	2.2uF	20%	50V
C165	1-136-169-00	FILM	0.22uF	5%	50V
C166	1-136-169-00	FILM	0.22uF	5%	50V
C167	1-126-964-11	ELECT	10uF	20%	50V
C171	1-126-964-11	ELECT	10uF	20%	50V
C172	1-126-964-11	ELECT	10uF	20%	50V
C177	1-126-961-11	ELECT	2.2uF	20%	50V
C179	1-126-963-11	ELECT	4.7uF	20%	50V
C181	1-164-156-11	CERAMIC CHIP	0.1uF		25V
C182	1-126-963-11	ELECT	4.7uF	20%	50V
C185	1-126-960-11	ELECT	1uF	20%	50V
C186	1-126-960-11	ELECT	1uF	20%	50V
C187	1-164-156-11	CERAMIC CHIP	0.1uF		25V
C188	1-162-970-11	CERAMIC CHIP	0.01uF	10%	25V
C189	1-126-963-11	ELECT	4.7uF	20%	50V
C191	1-162-947-11	CERAMIC CHIP	33PF	5%	50V
C201	1-104-665-11	ELECT	100uF	20%	10V
C202	1-126-916-11	ELECT	1000uF	20%	6.3V
C203	1-164-227-11	CERAMIC CHIP	0.022uF	10%	25V
C205	1-164-227-11	CERAMIC CHIP	0.022uF	10%	25V
C207	1-126-916-11	ELECT	1000uF	20%	6.3V
C209	1-126-935-11	ELECT	470uF	20%	10V
C212	1-162-964-11	CERAMIC CHIP	0.001uF	10%	50V
C301	1-126-960-11	ELECT	1uF	20%	50V
C302	1-130-479-00	MYLAR	0.0047uF	5%	50V
C303	1-136-165-00	FILM	0.1uF	5%	50V
C304	1-136-165-00	FILM	0.1uF	5%	50V
C305	1-126-964-11	ELECT	10uF	20%	50V
C306	1-126-960-11	ELECT	1uF	20%	50V
C307	1-126-959-11	ELECT	0.47uF	20%	50V
C308	1-126-964-11	ELECT	10uF	20%	50V
C309	1-137-194-81	FILM	0.47uF	5%	50V
C310	1-162-962-11	CERAMIC CHIP	470PF	10%	50V
C311	1-126-964-11	ELECT	10uF	20%	50V
C312	1-126-959-11	ELECT	0.47uF	20%	50V
C313	1-162-964-11	CERAMIC CHIP	0.001uF	10%	50V
C314	1-126-964-11	ELECT	10uF	20%	50V
C315	1-126-963-11	ELECT	4.7uF	20%	50V
C316	1-126-933-11	ELECT	100uF	20%	16V
C317	1-104-665-11	ELECT	100uF	20%	10V
C318	1-126-964-11	ELECT	10uF	20%	50V
C319	1-126-961-11	ELECT	2.2uF	20%	50V
C320	1-126-961-11	ELECT	2.2uF	20%	50V
C321	1-164-392-11	CERAMIC CHIP	390PF	10%	50V
C322	1-162-953-11	CERAMIC CHIP	100PF	5%	50V
C323	1-130-487-00	MYLAR	0.022uF	5%	50V
C324	1-126-964-11	ELECT	10uF	20%	50V
C325	1-126-965-11	ELECT	22uF	20%	50V
C326	1-164-392-11	CERAMIC CHIP	390PF	10%	50V
C327	1-104-665-11	ELECT	100uF	20%	10V
C328	1-162-953-11	CERAMIC CHIP	100PF	5%	50V
C329	1-130-483-00	MYLAR	0.01uF	5%	50V
C330	1-126-964-11	ELECT	10uF	20%	50V
C331	1-126-965-11	ELECT	22uF	20%	50V
C332	1-137-427-11	MYLAR	120PF	5%	50V
C333	1-162-961-11	CERAMIC CHIP	330PF	10%	50V
C334	1-162-946-11	CERAMIC CHIP	27PF	5%	50V
C335	1-137-150-11	MYLAR	0.01uF	5%	100V
C336	1-126-961-11	ELECT	2.2uF	20%	50V
C337	1-130-485-00	MYLAR	0.015uF	5%	50V

MAIN

Ref. No.	Part No.	Description			Remark
C338	1-130-481-00	MYLAR	0.0068uF	5%	50V
C339	1-130-481-00	MYLAR	0.0068uF	5%	50V
C340	1-130-486-00	MYLAR	0.018uF	10%	50V
C341	1-126-960-11	ELECT	1uF	20%	50V
C342	1-104-660-11	ELECT	47uF	20%	16V
C351	1-126-960-11	ELECT	1uF	20%	50V
C352	1-130-479-00	MYLAR	0.0047uF	5%	50V
C353	1-136-165-00	FILM	0.1uF	5%	50V
C354	1-136-165-00	FILM	0.1uF	5%	50V
C355	1-126-964-11	ELECT	10uF	20%	50V
C356	1-126-960-11	ELECT	1uF	20%	50V
C357	1-126-959-11	ELECT	0.47uF	20%	50V
C358	1-126-964-11	ELECT	10uF	20%	50V
C359	1-137-194-81	FILM	0.47uF	5%	50V
C360	1-162-962-11	CERAMIC CHIP	470PF	10%	50V
C362	1-162-968-11	CERAMIC CHIP	0.0047uF	10%	50V
C363	1-162-968-11	CERAMIC CHIP	0.0047uF	10%	50V
C368	1-126-964-11	ELECT	10uF	20%	50V
C369	1-126-961-11	ELECT	2.2uF	20%	50V
C370	1-126-961-11	ELECT	2.2uF	20%	50V
C371	1-164-392-11	CERAMIC CHIP	390PF	10%	50V
C372	1-162-953-11	CERAMIC CHIP	100PF	5%	50V
C373	1-130-487-00	MYLAR	0.022uF	5%	50V
C374	1-126-964-11	ELECT	10uF	20%	50V
C375	1-126-965-11	ELECT	22uF	20%	50V
C376	1-164-392-11	CERAMIC CHIP	390PF	10%	50V
C377	1-104-665-11	ELECT	100uF	20%	10V
C378	1-162-953-11	CERAMIC CHIP	100PF	5%	50V
C379	1-130-483-00	MYLAR	0.01uF	5%	50V
C380	1-126-964-11	ELECT	10uF	20%	50V
C381	1-126-965-11	ELECT	22uF	20%	50V
C382	1-137-427-11	MYLAR	120PF	5%	50V
C383	1-162-961-11	CERAMIC CHIP	330PF	10%	50V
C384	1-162-946-11	CERAMIC CHIP	27PF	5%	50V
C385	1-126-964-11	ELECT	10uF	20%	50V
C395	1-164-156-11	CERAMIC CHIP	0.1uF		25V
C504	1-109-953-11	ELECT	2.2uF	20%	50V
C505	1-164-156-11	CERAMIC CHIP	0.1uF		25V
C510	1-162-918-11	CERAMIC CHIP	18PF	5%	50V
C511	1-162-917-11	CERAMIC CHIP	15PF	5%	50V
C512	1-164-156-11	CERAMIC CHIP	0.1uF		25V
C514	1-164-156-11	CERAMIC CHIP	0.1uF		25V
C516	1-126-916-11	ELECT	1000uF	20%	6.3V
C530	1-162-953-11	CERAMIC CHIP	100PF	5%	50V
C546	1-162-964-11	CERAMIC CHIP	0.001uF	10%	50V
C562	1-104-665-11	ELECT	100uF	20%	10V
C564	1-162-970-11	CERAMIC CHIP	0.01uF	10%	25V
C575	1-136-165-00	FILM	0.1uF	5%	50V
C576	1-136-165-00	FILM	0.1uF	5%	50V
C577	1-126-964-11	ELECT	10uF	20%	50V
C588	1-164-156-11	CERAMIC CHIP	0.1uF		25V
C596	1-164-156-11	CERAMIC CHIP	0.1uF		25V
C598	1-164-156-11	CERAMIC CHIP	0.1uF		25V
C599	1-126-964-11	ELECT	10uF	20%	50V
C803	1-162-970-11	CERAMIC CHIP	0.01uF	10%	25V
C821	1-104-665-11	ELECT	100uF	20%	10V
C822	1-126-961-11	ELECT	2.2uF	20%	50V

Ref. No.	Part No.	Description			Remark
C824	1-126-960-11	ELECT	1uF	20%	50V
C841	1-126-959-11	ELECT	0.47uF	20%	50V
C853	1-162-970-11	CERAMIC CHIP	0.01uF	10%	25V
C861	1-107-717-11	ELECT	47uF	20%	50V
C862	1-107-721-11	ELECT	4.7uF	20%	100V
C863	1-107-721-11	ELECT	4.7uF	20%	100V
C891	1-126-964-11	ELECT	10uF	20%	50V
C892	1-164-156-11	CERAMIC CHIP	0.1uF		25V
C901	1-111-235-61	ELECT	10000uF	20%	25V
C902	1-136-165-00	FILM	0.1uF	5%	50V
C903	1-136-165-00	FILM	0.1uF	5%	50V
C905	1-136-165-00	FILM	0.1uF	5%	50V
C906	1-136-165-00	FILM	0.1uF	5%	50V
C907	1-128-548-11	ELECT	4700uF	20%	25V
C908	1-126-942-61	ELECT	1000uF	20%	25V
C909	1-126-952-11	ELECT	1000uF	20%	35V
C911	1-126-956-91	ELECT	0.1uF	20%	50V
C912	1-126-917-11	ELECT	3300uF	20%	6.3V
C921	1-126-956-91	ELECT	0.1uF	20%	50V
C922	1-126-933-11	ELECT	100uF	20%	16V
C925	1-104-665-11	ELECT	100uF	20%	10V
C932	1-126-935-11	ELECT	470uF	20%	10V
C951	1-126-960-11	ELECT	1uF	20%	50V
C961	1-126-960-11	ELECT	1uF	20%	50V
C962	1-126-926-11	ELECT	1000uF	20%	10V
		< FILTER >			
CF1	1-760-023-11	FILTER, CERAMIC			
CF2	1-760-023-11	FILTER, CERAMIC			
		< CONNECTOR >			
* CN101	1-565-291-11	SOCKET, CONNECTOR 13P (SYSTEM CONTROL)			
CN201	1-565-937-11	SOCKET, CONNECTOR 13P			
CN202	1-785-336-11	PIN, CONNECTOR (LIGHT ANGLE) 10P			
* CN301	1-568-449-11	HOUSING, CONNECTOR (PC BOARD) 3P			
* CN304	1-569-934-11	SOCKET, CONNECTOR 17P			
CN401	1-793-766-11	CONNECTOR, BOARD TO BOARD 30P			
CN402	1-785-330-11	PIN, CONNECTOR (LIGHT ANGLE) 4P			
CN891	1-564-506-11	PLUG, CONNECTOR 3P			
CN901	1-778-982-21	CONNECTOR, BOARD TO BOARD 13P			
CN902	1-778-982-21	CONNECTOR, BOARD TO BOARD 13P			
		< DIODE >			
D51	8-719-988-61	DIODE 1SS355TE-17			
D507	8-719-988-61	DIODE 1SS355TE-17			
D508	8-719-988-61	DIODE 1SS355TE-17			
D509	8-719-988-61	DIODE 1SS355TE-17			
D510	8-719-988-61	DIODE 1SS355TE-17			
D511	8-719-988-61	DIODE 1SS355TE-17			
D512	8-719-988-61	DIODE 1SS355TE-17			
D575	8-719-988-61	DIODE 1SS355TE-17			
D576	8-719-988-61	DIODE 1SS355TE-17			
D577	8-719-988-61	DIODE 1SS355TE-17			
D578	8-719-988-61	DIODE 1SS355TE-17			
D579	8-719-988-61	DIODE 1SS355TE-17			
D580	8-719-988-61	DIODE 1SS355TE-17			
D801	8-719-988-61	DIODE 1SS355TE-17			

MAIN

Ref. No.	Part No.	Description				Remark
D822	8-719-988-61	DIODE 1SS355TE-17				
D824	8-719-988-61	DIODE 1SS355TE-17				
D841	8-719-988-61	DIODE 1SS355TE-17				
D861	8-719-988-61	DIODE 1SS355TE-17				
D892	8-719-988-61	DIODE 1SS355TE-17				
D893	8-719-988-61	DIODE 1SS355TE-17				
D901	8-719-080-70	DIODE 11EQS04N-TB5				
D902	8-719-080-70	DIODE 11EQS04N-TB5				
D903	8-719-080-70	DIODE 11EQS04N-TB5				
D904	8-719-080-70	DIODE 11EQS04N-TB5				
D906	8-719-083-89	DIODE 11ES2N-TB5				
D907	8-719-083-89	DIODE 11ES2N-TB5				
D908	8-719-083-89	DIODE 11ES2N-TB5				
D909	8-719-083-89	DIODE 11ES2N-TB5				
D910	8-719-083-89	DIODE 11ES2N-TB5				
D911	8-719-083-89	DIODE 11ES2N-TB5				
D912	8-719-083-89	DIODE 11ES2N-TB5				
D920	8-719-083-89	DIODE 11ES2N-TB5				
D921	8-719-083-89	DIODE 11ES2N-TB5				
D922	8-719-083-89	DIODE 11ES2N-TB5				
D952	8-719-988-61	DIODE 1SS355TE-17				
D953	8-719-988-61	DIODE 1SS355TE-17				
		< FERRITE BEAD >				
FB201	1-216-864-11	METAL CHIP	0	5%	1/16W	
FB202	1-216-864-11	METAL CHIP	0	5%	1/16W	
FB203	1-216-864-11	METAL CHIP	0	5%	1/16W	
FB204	1-216-864-11	METAL CHIP	0	5%	1/16W	
FB516	1-216-864-11	METAL CHIP	0	5%	1/16W	
FB562	1-216-864-11	METAL CHIP	0	5%	1/16W	
FB599	1-216-864-11	METAL CHIP	0	5%	1/16W	
		< FRONT END >				
FE1	1-693-477-12	FRONT END (3 GANGS) (FM FRONT-END)				(EXCEPT E91)
FE2	1-693-478-11	FRONT END (FM3 GANGS) (FM FRONT-END)				(E91)
		< IC >				
IC11	8-759-828-33	IC LA1845				
IC51	8-759-584-70	IC LC72131				
IC101	8-759-652-04	IC M61504FP-TP				
IC102	8-759-710-97	IC NJM4565M (TE2)				
IC103	8-759-652-01	IC LA2615				
IC104	8-759-710-97	IC NJM4565M (TE2)				
IC105	8-759-525-25	IC BU4052BCF-E2				
IC201	8-749-923-04	IC TOTX178A (OPTICAL DIGITAL OUT)				
IC301	8-759-652-02	IC HA12226F				
IC302	8-759-143-54	IC uPC1330HA				
IC303	8-759-656-83	IC NJM4580MD-TE				
IC304	8-759-656-83	IC NJM4580MD-TE				
IC501	6-800-179-01	IC M30622MAA-A97FP				
IC502	8-759-635-63	IC M51943BSL-TP				
IC701	8-759-710-97	IC NJM4565M (TE2)				
IC911	8-759-039-69	IC uPC7805AHF				
IC921	8-759-088-08	IC uPC7812AHF				
IC951	8-759-158-62	IC TA78057S				

Ref. No.	Part No.	Description				Remark
IC961	8-759-701-59	IC AN7809				
		< IFT >				
IFT11	1-435-848-11	TRANSFORMER, IF (CERAMIC FILTER)				
		< JACK >				
J101	1-793-987-11	JACK, PIN 2P (MD/VIDEO (AUDIO) IN)				
		< JUMPER RESISTOR >				
JR1	1-216-864-11	METAL CHIP	0	5%	1/16W	
JR2	1-216-864-11	METAL CHIP	0	5%	1/16W	
JR3	1-216-864-11	METAL CHIP	0	5%	1/16W	
JR4	1-216-864-11	METAL CHIP	0	5%	1/16W	
JR5	1-216-864-11	METAL CHIP	0	5%	1/16W	
JR7	1-216-864-11	METAL CHIP	0	5%	1/16W	
JR8	1-216-864-11	METAL CHIP	0	5%	1/16W	
JR9	1-216-864-11	METAL CHIP	0	5%	1/16W	
JR11	1-216-864-11	METAL CHIP	0	5%	1/16W	
JR13	1-216-864-11	METAL CHIP	0	5%	1/16W	
JR15	1-216-864-11	METAL CHIP	0	5%	1/16W	
JR18	1-216-864-11	METAL CHIP	0	5%	1/16W	
JR19	1-216-864-11	METAL CHIP	0	5%	1/16W	
JR20	1-216-864-11	METAL CHIP	0	5%	1/16W	
JR21	1-216-864-11	METAL CHIP	0	5%	1/16W	
JR22	1-216-864-11	METAL CHIP	0	5%	1/16W	
JR24	1-216-864-11	METAL CHIP	0	5%	1/16W	
JR25	1-216-864-11	METAL CHIP	0	5%	1/16W	
JR26	1-216-864-11	METAL CHIP	0	5%	1/16W	
JR27	1-216-864-11	METAL CHIP	0	5%	1/16W	
JR28	1-216-864-11	METAL CHIP	0	5%	1/16W	
JR30	1-216-864-11	METAL CHIP	0	5%	1/16W	
JR35	1-216-864-11	METAL CHIP	0	5%	1/16W	
JR39	1-216-864-11	METAL CHIP	0	5%	1/16W	
JR301	1-216-864-11	METAL CHIP	0	5%	1/16W	
JR304	1-216-864-11	METAL CHIP	0	5%	1/16W	
JR501	1-216-864-11	METAL CHIP	0	5%	1/16W	
JR620	1-216-864-11	METAL CHIP	0	5%	1/16W	
JR670	1-216-864-11	METAL CHIP	0	5%	1/16W	
JR801	1-216-864-11	METAL CHIP	0	5%	1/16W	
JR805	1-216-864-11	METAL CHIP	0	5%	1/16W	
JR806	1-216-864-11	METAL CHIP	0	5%	1/16W	
JR919	1-216-864-11	METAL CHIP	0	5%	1/16W	
JR922	1-216-864-11	METAL CHIP	0	5%	1/16W	
		< COIL >				
L101	1-414-189-31	INDUCTOR	100uH			
L201	1-414-189-31	INDUCTOR	100uH			
L301	1-410-780-11	INDUCTOR	27mH			
L302	1-414-193-41	INDUCTOR	220uH			
L303	1-414-193-41	INDUCTOR	220uH			
L351	1-410-780-11	INDUCTOR	27mH			
		< FILTER >				
LPF11	1-234-612-11	FILTER, LOW PASS				
LPF12	1-234-612-11	FILTER, LOW PASS				

MAIN

Ref. No.	Part No.	Description			Remark
		< TRANSISTOR >			
Q1	8-729-055-80	TRANSISTOR	2SC1674LK-TP		
Q2	8-729-113-69	TRANSISTOR	FN1F4M-T1M32		
Q11	8-729-620-05	TRANSISTOR	2SC2603TP-EF		
Q12	8-729-620-05	TRANSISTOR	2SC2603TP-EF		
Q101	8-729-120-28	TRANSISTOR	2SC1623-T1-L5L6		
Q102	8-729-144-85	TRANSISTOR	2SK1133-T1B		
Q103	8-729-141-73	TRANSISTOR	2SC3624A-T1L15L16		
Q104	8-729-113-13	TRANSISTOR	FA1A4M-T1L33		
Q141	8-729-120-28	TRANSISTOR	2SC1623-T1-L5L6		
Q151	8-729-120-28	TRANSISTOR	2SC1623-T1-L5L6		
Q152	8-729-144-85	TRANSISTOR	2SK1133-T1B		
Q153	8-729-141-73	TRANSISTOR	2SC3624A-T1L15L16		
Q301	8-729-801-93	TRANSISTOR	2SD1387-34-TP		
Q302	8-729-142-46	TRANSISTOR	2SC2001TP-LK		
Q303	8-729-142-46	TRANSISTOR	2SC2001TP-LK		
Q304	8-729-113-69	TRANSISTOR	FN1F4M-T1M32		
Q305	8-729-113-13	TRANSISTOR	FA1A4M-T1L33		
Q391	8-729-140-04	TRANSISTOR	2SB1116-TP-LK		
Q392	8-729-113-13	TRANSISTOR	FA1A4M-T1L33		
Q393	8-729-140-04	TRANSISTOR	2SB1116-TP-LK		
Q394	8-729-113-13	TRANSISTOR	FA1A4M-T1L33		
Q395	8-729-113-13	TRANSISTOR	FA1A4M-T1L33		
Q396	8-729-116-57	TRANSISTOR	2SB1068TP-K		
Q397	8-729-113-13	TRANSISTOR	FA1A4M-T1L33		
Q503	8-729-113-13	TRANSISTOR	FA1A4M-T1L33		
Q504	8-729-113-69	TRANSISTOR	FN1F4M-T1M32		
Q505	8-729-113-13	TRANSISTOR	FA1A4M-T1L33		
Q575	8-729-120-28	TRANSISTOR	2SC1623-T1-L5L6		
Q821	8-729-120-28	TRANSISTOR	2SC1623-T1-L5L6		
Q822	8-729-120-28	TRANSISTOR	2SC1623-T1-L5L6		
Q823	8-729-216-22	TRANSISTOR	2SA812-T1-M5M6		
Q824	8-729-014-97	TRANSISTOR	FA1L3Z-T1B		
Q825	8-729-120-28	TRANSISTOR	2SC1623-T1-L5L6		
Q828	8-729-120-28	TRANSISTOR	2SC1623-T1-L5L6		
Q829	8-729-120-28	TRANSISTOR	2SC1623-T1-L5L6		
Q831	8-729-113-69	TRANSISTOR	FN1F4M-T1M32		
Q832	8-729-120-28	TRANSISTOR	2SC1623-T1-L5L6		
Q861	8-729-113-69	TRANSISTOR	FN1F4M-T1M32		
Q862	8-729-141-73	TRANSISTOR	2SC3624A-T1L15L16		
Q863	8-729-141-73	TRANSISTOR	2SC3624A-T1L15L16		
Q891	8-729-140-04	TRANSISTOR	2SB1116-TP-LK		
Q892	8-729-620-05	TRANSISTOR	2SC2603TP-EF		
Q911	8-729-141-83	TRANSISTOR	2SB1375		
Q912	8-729-113-13	TRANSISTOR	FA1A4M-T1L33		
		< RESISTOR >			
R1	1-216-864-11	METAL CHIP	0	5%	1/16W
R3	1-216-805-11	METAL CHIP	47	5%	1/16W
R4	1-216-805-11	METAL CHIP	47	5%	1/16W
R5	1-216-819-11	METAL CHIP	680	5%	1/16W
R6	1-216-815-11	METAL CHIP	330	5%	1/16W
R7	1-216-819-11	METAL CHIP	680	5%	1/16W
R8	1-216-821-11	METAL CHIP	1K	5%	1/16W
R10	1-216-814-11	METAL CHIP	270	5%	1/16W
R12	1-216-833-11	METAL CHIP	10K	5%	1/16W
R13	1-216-827-11	METAL CHIP	3.3K	5%	1/16W

Ref. No.	Part No.	Description			Remark
R14	1-216-814-11	METAL CHIP	270	5%	1/16W
R15	1-216-843-11	METAL CHIP	68K	5%	1/16W
R16	1-216-837-11	METAL CHIP	22K	5%	1/16W
R17	1-216-839-11	METAL CHIP	33K	5%	1/16W
R18	1-216-827-11	METAL CHIP	3.3K	5%	1/16W
R19	1-216-833-11	METAL CHIP	10K	5%	1/16W
R20	1-216-827-11	METAL CHIP	3.3K	5%	1/16W
R21	1-216-819-11	METAL CHIP	680	5%	1/16W
R22	1-216-825-11	METAL CHIP	2.2K	5%	1/16W
R23	1-216-829-11	METAL CHIP	4.7K	5%	1/16W
R24	1-216-819-11	METAL CHIP	680	5%	1/16W
R25	1-216-809-11	METAL CHIP	100	5%	1/16W
R26	1-216-825-11	METAL CHIP	2.2K	5%	1/16W
R27	1-216-829-11	METAL CHIP	4.7K	5%	1/16W
R28	1-216-849-11	METAL CHIP	220K	5%	1/16W
R29	1-216-849-11	METAL CHIP	220K	5%	1/16W
R30	1-216-827-11	METAL CHIP	3.3K	5%	1/16W
R31	1-216-864-11	METAL CHIP	0	5%	1/16W
R41	1-216-833-11	METAL CHIP	10K	5%	1/16W
R42	1-216-845-11	METAL CHIP	100K	5%	1/16W
R43	1-216-839-11	METAL CHIP	33K	5%	1/16W
R55	1-216-833-11	METAL CHIP	10K	5%	1/16W
R56	1-216-833-11	METAL CHIP	10K	5%	1/16W
R58	1-216-809-11	METAL CHIP	100	5%	1/16W
R59	1-216-825-11	METAL CHIP	2.2K	5%	1/16W
R60	1-216-825-11	METAL CHIP	2.2K	5%	1/16W
R61	1-216-809-11	METAL CHIP	100	5%	1/16W
R62	1-216-829-11	METAL CHIP	4.7K	5%	1/16W
R63	1-216-829-11	METAL CHIP	4.7K	5%	1/16W
R64	1-216-829-11	METAL CHIP	4.7K	5%	1/16W
R65	1-216-809-11	METAL CHIP	100	5%	1/16W
R66	1-216-833-11	METAL CHIP	10K	5%	1/16W
R67	1-216-833-11	METAL CHIP	10K	5%	1/16W
R68	1-216-821-11	METAL CHIP	1K	5%	1/16W
R69	1-216-829-11	METAL CHIP	4.7K	5%	1/16W
R101	1-216-821-11	METAL CHIP	1K	5%	1/16W
R102	1-216-845-11	METAL CHIP	100K	5%	1/16W
R103	1-216-833-11	METAL CHIP	10K	5%	1/16W
R104	1-216-833-11	METAL CHIP	10K	5%	1/16W
R105	1-216-845-11	METAL CHIP	100K	5%	1/16W
R106	1-216-845-11	METAL CHIP	100K	5%	1/16W
R107	1-216-849-11	METAL CHIP	220K	5%	1/16W
R108	1-216-845-11	METAL CHIP	100K	5%	1/16W
R109	1-216-833-11	METAL CHIP	10K	5%	1/16W
R110	1-216-819-11	METAL CHIP	680	5%	1/16W
R111	1-216-833-11	METAL CHIP	10K	5%	1/16W
R112	1-216-841-11	METAL CHIP	47K	5%	1/16W
R113	1-216-825-11	METAL CHIP	2.2K	5%	1/16W
R114	1-216-845-11	METAL CHIP	100K	5%	1/16W
R115	1-216-833-11	METAL CHIP	10K	5%	1/16W
R116	1-216-829-11	METAL CHIP	4.7K	5%	1/16W
R117	1-216-833-11	METAL CHIP	10K	5%	1/16W
R121	1-216-834-11	METAL CHIP	12K	5%	1/16W
R122	1-216-833-11	METAL CHIP	10K	5%	1/16W
R123	1-216-833-11	METAL CHIP	10K	5%	1/16W
R124	1-216-829-11	METAL CHIP	4.7K	5%	1/16W
R125	1-216-833-11	METAL CHIP	10K	5%	1/16W
R132	1-216-809-11	METAL CHIP	100	5%	1/16W

MAIN

Ref. No.	Part No.	Description			Remark
R133	1-216-809-11	METAL CHIP	100	5%	1/16W
R134	1-216-821-11	METAL CHIP	1K	5%	1/16W
R139	1-216-829-11	METAL CHIP	4.7K	5%	1/16W
R141	1-216-821-11	METAL CHIP	1K	5%	1/16W
R142	1-216-822-11	METAL CHIP	1.2K	5%	1/16W
R143	1-216-841-11	METAL CHIP	47K	5%	1/16W
R144	1-216-864-11	METAL CHIP	0	5%	1/16W
R145	1-216-821-11	METAL CHIP	1K	5%	1/16W
R146	1-216-821-11	METAL CHIP	1K	5%	1/16W
R147	1-216-821-11	METAL CHIP	1K	5%	1/16W
R148	1-216-821-11	METAL CHIP	1K	5%	1/16W
R151	1-216-821-11	METAL CHIP	1K	5%	1/16W
R152	1-216-845-11	METAL CHIP	100K	5%	1/16W
R153	1-216-833-11	METAL CHIP	10K	5%	1/16W
R154	1-216-833-11	METAL CHIP	10K	5%	1/16W
R155	1-216-845-11	METAL CHIP	100K	5%	1/16W
R156	1-216-845-11	METAL CHIP	100K	5%	1/16W
R157	1-216-849-11	METAL CHIP	220K	5%	1/16W
R158	1-216-845-11	METAL CHIP	100K	5%	1/16W
R159	1-216-833-11	METAL CHIP	10K	5%	1/16W
R160	1-216-819-11	METAL CHIP	680	5%	1/16W
R161	1-216-833-11	METAL CHIP	10K	5%	1/16W
R162	1-216-841-11	METAL CHIP	47K	5%	1/16W
R163	1-216-825-11	METAL CHIP	2.2K	5%	1/16W
R164	1-216-845-11	METAL CHIP	100K	5%	1/16W
R165	1-216-833-11	METAL CHIP	10K	5%	1/16W
R166	1-216-829-11	METAL CHIP	4.7K	5%	1/16W
R171	1-216-834-11	METAL CHIP	12K	5%	1/16W
R172	1-216-833-11	METAL CHIP	10K	5%	1/16W
R173	1-216-833-11	METAL CHIP	10K	5%	1/16W
R175	1-216-833-11	METAL CHIP	10K	5%	1/16W
R181	1-216-839-11	METAL CHIP	33K	5%	1/16W
R189	1-216-829-11	METAL CHIP	4.7K	5%	1/16W
R205	1-216-833-11	METAL CHIP	10K	5%	1/16W
R301	1-216-836-11	METAL CHIP	18K	5%	1/16W
R302	1-216-825-11	METAL CHIP	2.2K	5%	1/16W
R303	1-216-809-11	METAL CHIP	100	5%	1/16W
R304	1-216-809-11	METAL CHIP	100	5%	1/16W
R305	1-216-825-11	METAL CHIP	2.2K	5%	1/16W
R306	1-216-832-11	METAL CHIP	8.2K	5%	1/16W
R307	1-216-832-11	METAL CHIP	8.2K	5%	1/16W
R308	1-216-829-11	METAL CHIP	4.7K	5%	1/16W
R309	1-216-837-11	METAL CHIP	22K	5%	1/16W
R311	1-216-857-11	METAL CHIP	1M	5%	1/16W
R312	1-218-745-11	RES-CHIP	160K	5%	1/16W
R313	1-216-845-11	METAL CHIP	100K	5%	1/16W
R315	1-216-833-11	METAL CHIP	10K	5%	1/16W
R316	1-216-839-11	METAL CHIP	33K	5%	1/16W
R317	1-216-833-11	METAL CHIP	10K	5%	1/16W
R318	1-216-833-11	METAL CHIP	10K	5%	1/16W
R319	1-216-852-11	METAL CHIP	390K	5%	1/16W
R320	1-216-822-11	METAL CHIP	1.2K	5%	1/16W
R321	1-216-829-11	METAL CHIP	4.7K	5%	1/16W
R331	1-216-846-11	METAL CHIP	120K	5%	1/16W
R332	1-216-809-11	METAL CHIP	100	5%	1/16W
R333	1-216-830-11	METAL CHIP	5.6K	5%	1/16W
R334	1-218-332-11	RES-CHIP	130K	5%	1/16W
R335	1-216-813-11	METAL CHIP	220	5%	1/16W
R336	1-216-846-11	METAL CHIP	120K	5%	1/16W
R337	1-216-813-11	METAL CHIP	220	5%	1/16W
R338	1-216-837-11	METAL CHIP	22K	5%	1/16W
R339	1-216-834-11	METAL CHIP	12K	5%	1/16W
R340	1-216-850-11	METAL CHIP	270K	5%	1/16W
R341	1-216-813-11	METAL CHIP	220	5%	1/16W
R342	1-216-834-11	METAL CHIP	12K	5%	1/16W
⚠R343	1-219-787-17	FUSIBLE	5.6	5%	1/4W F
⚠R344	1-219-787-17	FUSIBLE	5.6	5%	1/4W F
R345	1-216-836-11	METAL CHIP	18K	5%	1/16W
R346	1-216-836-11	METAL CHIP	18K	5%	1/16W
R347	1-216-830-11	METAL CHIP	5.6K	5%	1/16W
R351	1-216-836-11	METAL CHIP	18K	5%	1/16W
R352	1-216-825-11	METAL CHIP	2.2K	5%	1/16W
R353	1-216-809-11	METAL CHIP	100	5%	1/16W
R354	1-216-809-11	METAL CHIP	100	5%	1/16W
R355	1-216-825-11	METAL CHIP	2.2K	5%	1/16W
R356	1-216-832-11	METAL CHIP	8.2K	5%	1/16W
R357	1-216-832-11	METAL CHIP	8.2K	5%	1/16W
R358	1-216-829-11	METAL CHIP	4.7K	5%	1/16W
R359	1-216-839-11	METAL CHIP	33K	5%	1/16W
R360	1-216-819-11	METAL CHIP	680	5%	1/16W
R361	1-216-825-11	METAL CHIP	2.2K	5%	1/16W
R363	1-216-825-11	METAL CHIP	2.2K	5%	1/16W
R364	1-216-819-11	METAL CHIP	680	5%	1/16W
R366	1-216-827-11	METAL CHIP	3.3K	5%	1/16W
R367	1-216-841-11	METAL CHIP	47K	5%	1/16W
R368	1-216-827-11	METAL CHIP	3.3K	5%	1/16W
R369	1-216-827-11	METAL CHIP	3.3K	5%	1/16W
R371	1-216-841-11	METAL CHIP	47K	5%	1/16W
R372	1-216-829-11	METAL CHIP	4.7K	5%	1/16W
R373	1-216-821-11	METAL CHIP	1K	5%	1/16W
R374	1-216-841-11	METAL CHIP	47K	5%	1/16W
R375	1-218-296-11	RES-CHIP	75K	5%	1/16W
R376	1-216-829-11	METAL CHIP	4.7K	5%	1/16W
R377	1-216-841-11	METAL CHIP	47K	5%	1/16W
R378	1-218-296-11	RES-CHIP	75K	5%	1/16W
R379	1-216-821-11	METAL CHIP	1K	5%	1/16W
R380	1-216-824-11	METAL CHIP	1.8K	5%	1/16W
R381	1-216-846-11	METAL CHIP	120K	5%	1/16W
R382	1-216-809-11	METAL CHIP	100	5%	1/16W
R383	1-216-830-11	METAL CHIP	5.6K	5%	1/16W
R384	1-218-332-11	RES-CHIP	130K	5%	1/16W
R386	1-216-846-11	METAL CHIP	120K	5%	1/16W
R387	1-216-813-11	METAL CHIP	220	5%	1/16W
R388	1-216-837-11	METAL CHIP	22K	5%	1/16W
R389	1-216-834-11	METAL CHIP	12K	5%	1/16W
R390	1-216-850-11	METAL CHIP	270K	5%	1/16W
R391	1-216-825-11	METAL CHIP	2.2K	5%	1/16W
R392	1-216-834-11	METAL CHIP	12K	5%	1/16W
R393	1-216-837-11	METAL CHIP	22K	5%	1/16W
R394	1-216-813-11	METAL CHIP	220	5%	1/16W
R396	1-216-829-11	METAL CHIP	4.7K	5%	1/16W
R397	1-216-821-11	METAL CHIP	1K	5%	1/16W
R398	1-216-824-11	METAL CHIP	1.8K	5%	1/16W
R399	1-216-825-11	METAL CHIP	2.2K	5%	1/16W
R500	1-216-829-11	METAL CHIP	4.7K	5%	1/16W

The components identified by mark ⚠ or dotted line with mark ⚠ are critical for safety.
Replace only with part number specified.

MAIN

Ref. No.	Part No.	Description			Remark
R501	1-216-837-11	METAL CHIP	22K	5%	1/16W
R502	1-216-833-11	METAL CHIP	10K	5%	1/16W
R503	1-216-833-11	METAL CHIP	10K	5%	1/16W
R504	1-216-833-11	METAL CHIP	10K	5%	1/16W
R507	1-216-833-11	METAL CHIP	10K	5%	1/16W
R508	1-216-829-11	METAL CHIP	4.7K	5%	1/16W
R509	1-216-833-11	METAL CHIP	10K	5%	1/16W
R510	1-216-845-11	METAL CHIP	100K	5%	1/16W
R511	1-216-851-11	METAL CHIP	330K	5%	1/16W
R513	1-216-864-11	METAL CHIP	0	5%	1/16W
R515	1-216-833-11	METAL CHIP	10K	5%	1/16W
R516	1-216-833-11	METAL CHIP	10K	5%	1/16W
R517	1-216-833-11	METAL CHIP	10K	5%	1/16W
R518	1-216-833-11	METAL CHIP	10K	5%	1/16W
R520	1-216-833-11	METAL CHIP	10K	5%	1/16W
R522	1-216-829-11	METAL CHIP	4.7K	5%	1/16W
R523	1-216-821-11	METAL CHIP	1K	5%	1/16W (EA)
R529	1-216-809-11	METAL CHIP	100	5%	1/16W
R530	1-216-809-11	METAL CHIP	100	5%	1/16W
R532	1-216-841-11	METAL CHIP	47K	5%	1/16W
R541	1-216-841-11	METAL CHIP	47K	5%	1/16W
R543	1-216-809-11	METAL CHIP	100	5%	1/16W
R544	1-216-809-11	METAL CHIP	100	5%	1/16W
R545	1-216-809-11	METAL CHIP	100	5%	1/16W
R546	1-216-809-11	METAL CHIP	100	5%	1/16W
R547	1-216-809-11	METAL CHIP	100	5%	1/16W
R548	1-216-809-11	METAL CHIP	100	5%	1/16W
R549	1-216-809-11	METAL CHIP	100	5%	1/16W
R553	1-216-833-11	METAL CHIP	10K	5%	1/16W
R556	1-216-809-11	METAL CHIP	100	5%	1/16W
R557	1-216-809-11	METAL CHIP	100	5%	1/16W
R570	1-216-809-11	METAL CHIP	100	5%	1/16W
R573	1-216-833-11	METAL CHIP	10K	5%	1/16W
R574	1-216-833-11	METAL CHIP	10K	5%	1/16W
R575	1-216-833-11	METAL CHIP	10K	5%	1/16W
R576	1-216-841-11	METAL CHIP	47K	5%	1/16W
R577	1-216-841-11	METAL CHIP	47K	5%	1/16W
R578	1-216-829-11	METAL CHIP	4.7K	5%	1/16W
R579	1-216-817-11	METAL CHIP	470	5%	1/16W
R582	1-216-833-11	METAL CHIP	10K	5%	1/16W
R583	1-216-809-11	METAL CHIP	100	5%	1/16W
R584	1-216-809-11	METAL CHIP	100	5%	1/16W
R585	1-216-833-11	METAL CHIP	10K	5%	1/16W
R588	1-216-817-11	METAL CHIP	470	5%	1/16W
R589	1-216-809-11	METAL CHIP	100	5%	1/16W
R590	1-216-809-11	METAL CHIP	100	5%	1/16W
R591	1-216-809-11	METAL CHIP	100	5%	1/16W
R592	1-216-827-11	METAL CHIP	3.3K	5%	1/16W
R593	1-216-829-11	METAL CHIP	4.7K	5%	1/16W (EA)
R594	1-216-809-11	METAL CHIP	100	5%	1/16W
R595	1-216-809-11	METAL CHIP	100	5%	1/16W
R597	1-216-833-11	METAL CHIP	10K	5%	1/16W
R702	1-216-821-11	METAL CHIP	1K	5%	1/16W
R705	1-216-821-11	METAL CHIP	1K	5%	1/16W
R752	1-216-821-11	METAL CHIP	1K	5%	1/16W
R755	1-216-821-11	METAL CHIP	1K	5%	1/16W

Ref. No.	Part No.	Description			Remark
R804	1-216-841-11	METAL CHIP	47K	5%	1/16W
R820	1-216-821-11	METAL CHIP	1K	5%	1/16W
R821	1-216-841-11	METAL CHIP	47K	5%	1/16W
R822	1-216-842-11	METAL CHIP	56K	5%	1/16W
R823	1-216-833-11	METAL CHIP	10K	5%	1/16W
R824	1-216-841-11	METAL CHIP	47K	5%	1/16W
R825	1-216-827-11	METAL CHIP	3.3K	5%	1/16W
R826	1-216-839-11	METAL CHIP	33K	5%	1/16W
R827	1-216-837-11	METAL CHIP	22K	5%	1/16W
R829	1-216-837-11	METAL CHIP	22K	5%	1/16W
R830	1-216-829-11	METAL CHIP	4.7K	5%	1/16W
R831	1-216-829-11	METAL CHIP	4.7K	5%	1/16W
R832	1-216-845-11	METAL CHIP	100K	5%	1/16W
R841	1-216-837-11	METAL CHIP	22K	5%	1/16W
R842	1-216-837-11	METAL CHIP	22K	5%	1/16W
R843	1-216-829-11	METAL CHIP	4.7K	5%	1/16W
R844	1-216-845-11	METAL CHIP	100K	5%	1/16W
R845	1-216-857-11	METAL CHIP	1M	5%	1/16W
R854	1-216-841-11	METAL CHIP	47K	5%	1/16W
R861	1-216-821-11	METAL CHIP	1K	5%	1/16W
R862	1-216-833-11	METAL CHIP	10K	5%	1/16W
R863	1-216-841-11	METAL CHIP	47K	5%	1/16W
R864	1-216-821-11	METAL CHIP	1K	5%	1/16W
R865	1-216-821-11	METAL CHIP	1K	5%	1/16W
R866	1-216-806-11	RES-CHIP	56	5%	1/16W
⚠R868	1-215-891-11	METAL OXIDE	680	5%	2W F
⚠R869	1-215-891-11	METAL OXIDE	680	5%	2W F
R891	1-216-833-11	METAL CHIP	10K	5%	1/16W
R892	1-216-829-11	METAL CHIP	4.7K	5%	1/16W
R893	1-216-825-11	METAL CHIP	2.2K	5%	1/16W
R895	1-216-864-11	METAL CHIP	0	5%	1/16W
⚠R901	1-249-405-11	CARBON	100	5%	1/4W F
R911	1-216-826-11	METAL CHIP	2.7K	5%	1/16W
R912	1-216-825-11	METAL CHIP	2.2K	5%	1/16W
R914	1-216-825-11	METAL CHIP	2.2K	5%	1/16W
⚠R915	1-219-591-11	FUSIBLE	0.1	5%	1/2W F
⚠R916	1-219-119-11	FUSIBLE	0.1	5%	1/4W F
R966	1-216-806-11	RES-CHIP	56	5%	1/16W
		< COMPOSITION CIRCUIT BLOCK >			
RB41	1-234-575-11	ENCAPSULATED COMPONENT (AM FRONT-END)			
		< VARIABLE RESISTOR >			
RV11	1-241-765-11	RES, ADJ, CARBON	22K		
RV301	1-241-764-11	RES, ADJ, CARBON	10K		
RV302	1-241-762-11	RES, ADJ, CARBON	2.2K		
RV303	1-241-762-11	RES, ADJ, CARBON	2.2K		
RV304	1-241-768-11	RES, ADJ, CARBON	220K		
RV351	1-241-764-11	RES, ADJ, CARBON	10K		
RV354	1-241-768-11	RES, ADJ, CARBON	220K		
		< RELAY >			
RY801	1-755-372-11	RELAY			

The components identified by mark ⚠ or dotted line with mark ⚠ are critical for safety.
Replace only with part number specified.

MAIN | MAIN TRANS | MOTOR | PAD SWITCH

Ref. No.	Part No.	Description				Remark
		< TRANSFORMER >				
T11	1-435-792-11	TRANSFORMER, DISCRIMINATOR				
T301	1-423-980-11	TRANSFORMER, BIAS OSCILLATION				
		< TERMINAL >				
TM1	1-694-555-22	TERMINAL BOARD (4P) (ANTENNA)				
TM801	1-694-635-12	TERMINAL BOARD (4P) (SPEAKER)				
		< VIBRATOR >				
X51	1-760-549-31	VIBRATOR, CRYSTAL (4.5MHz)				
X501	1-567-098-41	VIBRATOR, CRYSTAL (32.768kHz)				
X502	1-781-107-21	VIBRATOR, SERAMIC (16MHz)				
**********						
	1-680-265-11	MAIN TRANS BOARD				
		**********				
	1-533-217-11	HOLDER, FUSE				
		< CAPACITOR >				
C941	1-128-553-11	ELECT	220uF	20%	63V	
		< CONNECTOR >				
CN973	1-568-106-11	PIN, CONNECTOR 4P (EXCEPT E91)				
CN973	1-564-321-00	PIN, CONNECTOR 2P (E91)				
CN977	1-564-528-11	PLUG, CONNECTOR 13P				
		< DIODE >				
D977	8-719-024-99	DIODE 11ES2-NTA2B				
		< FUSE >				
⚠F971	1-533-473-11	FUSE, GLASS TUBE (DIA.5) (T6.3AL/250V) (EXCEPT E91)				
⚠F974	1-533-473-11	FUSE, GLASS TUBE (DIA.5) (T6.3AL/250V)				
⚠F975	1-533-473-11	FUSE, GLASS TUBE (DIA.5) (T6.3AL/250V)				
⚠F976	1-533-949-31	FUSE, CYLINDRICAL (TIME LUG) (T8.0AL/250V)				
⚠F977	1-533-949-31	FUSE, CYLINDRICAL (TIME LUG) (T8.0AL/250V)				
		< RESISTOR >				
⚠R941	1-217-637-00	FUSIBLE	1	5%	1/4W	F
⚠R944	1-217-641-00	FUSIBLE	4.7	5%	1/4W	F
⚠R951	1-219-120-11	FUSIBLE	0.15	5%	1/4W	F
⚠R952	1-219-120-11	FUSIBLE	0.15	5%	1/4W	
⚠R953	1-219-120-11	FUSIBLE	0.15	5%	1/4W	
		< TRANSFORMER >				
⚠T910	1-437-356-11	POWER TRANSFORMER				
**********						
	1-675-910-14	MOTOR BOARD				
		**********				
		< CAPACITOR >				
C721	1-162-306-11	CERAMIC	0.01uF	30%	16V	

Ref. No.	Part No.	Description				Remark
		< CONNECTOR >				
CN721	1-770-516-31	CONNECTOR, FFC 8P				
CN722	1-785-330-11	PIN, CONNECTOR (LIGHT ANGLE) 4P				
		< SWITCH >				
S701	1-771-822-11	SWITCH, LEVER (SLIDE) (OPEN/CLOSE)				
**********						
	A-2007-995-A	PAD SWITCH BOARD, COMPLETE (IA)				
	A-4476-103-A	PAD SWITCH BOARD, COMPLETE (E3, EA, SP2/6)				
	A-4725-802-A	PAD SWITCH BOARD, COMPLETE (E91)				
		**********				
		< CAPACITOR >				
C751	1-162-306-11	CERAMIC	0.01uF	30%	16V	
C752	1-162-306-11	CERAMIC	0.01uF	30%	16V	
		< DIODE >				
D751	8-719-063-93	LED SLR325VC-N-T32 (REC PAUSE/START)				
D752	8-719-063-93	LED SLR325VC-N-T32 (ENTER)				
		< TRANSISTOR >				
Q751	8-729-900-80	TRANSISTOR	BA1A4M-TP			
Q752	8-729-900-80	TRANSISTOR	BA1A4M-TP			
		< RESISTOR >				
R750	1-249-410-11	CARBON	270	5%	1/4W	
R751	1-249-415-11	CARBON	680	5%	1/4W	
R752	1-249-411-11	CARBON	330	5%	1/4W	
R754	1-249-410-11	CARBON	270	5%	1/4W	
R755	1-249-413-11	CARBON	470	5%	1/4W	
R756	1-249-414-11	CARBON	560	5%	1/4W	
R757	1-249-416-11	CARBON	820	5%	1/4W	
R758	1-249-417-11	CARBON	1K	5%	1/4W	
R759	1-249-418-11	CARBON	1.2K	5%	1/4W	
R760	1-249-419-11	CARBON	1.5K	5%	1/4W	
R761	1-249-421-11	CARBON	2.2K	5%	1/4W	
R762	1-249-422-11	CARBON	2.7K	5%	1/4W	
R763	1-249-424-11	CARBON	3.9K	5%	1/4W	
R764	1-249-426-11	CARBON	5.6K	5%	1/4W	
R765	1-249-428-11	CARBON	8.2K	5%	1/4W	
R766	1-249-431-11	CARBON	15K	5%	1/4W	
R767	1-249-434-11	CARBON	27K	5%	1/4W	
R768	1-249-410-11	CARBON	270	5%	1/4W	
R769	1-249-413-11	CARBON	470	5%	1/4W	
R770	1-249-414-11	CARBON	560	5%	1/4W	
R771	1-249-416-11	CARBON	820	5%	1/4W	
R772	1-249-417-11	CARBON	1K	5%	1/4W	
R773	1-249-418-11	CARBON	1.2K	5%	1/4W	
R774	1-249-419-11	CARBON	1.5K	5%	1/4W	
R775	1-249-421-11	CARBON	2.2K	5%	1/4W	
R776	1-249-422-11	CARBON	2.7K	5%	1/4W	
R777	1-249-424-11	CARBON	3.9K	5%	1/4W	
R778	1-249-426-11	CARBON	5.6K	5%	1/4W	
R779	1-249-428-11	CARBON	8.2K	5%	1/4W	
R780	1-249-431-11	CARBON	15K	5%	1/4W	

The components identified by mark ⚠ or dotted line with mark ⚠ are critical for safety.
Replace only with part number specified.

PAD SWITCH | PANEL

Ref. No.	Part No.	Description			Remark
R781	1-249-439-11	CARBON	68K	5%	1/4W
R790	1-249-434-11	CARBON	27K	5%	1/4W
		< SWITCH >			
S751	1-476-504-11	ENCODER, ROTARY (VOLUME)			
S752	1-771-410-21	SWITCH, TACTILE (DISPLAY)			
S753	1-771-410-21	SWITCH, TACTILE (▶)			
S754	1-771-410-21	SWITCH, TACTILE (◀)			
S755	1-771-410-21	SWITCH, TACTILE (SPECTRUM)			
S756	1-771-410-21	SWITCH, TACTILE (EFECT ON/OFF)			
S757	1-771-410-21	SWITCH, TACTILE (GAME EQ)			
S758	1-771-410-21	SWITCH, TACTILE (KARAOKE PON)			
S759	1-771-410-21	SWITCH, TACTILE (PICTURE EFECT)			
S760	1-771-410-21	SWITCH, TACTILE (◀◀ –)			
S761	1-771-410-21	SWITCH, TACTILE (I◀◀)			
S762	1-771-410-21	SWITCH, TACTILE (■)			
S763	1-771-410-21	SWITCH, TACTILE (CD SYNC HI-DUB)			
S764	1-771-410-21	SWITCH, TACTILE (REC PAUSE/START)			
S765	1-771-410-21	SWITCH, TACTILE (▶▶ +)			
S766	1-771-410-21	SWITCH, TACTILE (REW)			
S767	1-771-410-21	SWITCH, TACTILE (FF)			
S768	1-771-410-21	SWITCH, TACTILE (PLAY MODE)			
S769	1-771-410-21	SWITCH, TACTILE (REPEAT)			
S770	1-771-410-21	SWITCH, TACTILE (EDIT)			
S771	1-771-410-21	SWITCH, TACTILE (MUSIC EQ)			
S772	1-771-410-21	SWITCH, TACTILE (MOVIE EQ)			
S773	1-771-410-21	SWITCH, TACTILE (▲)			
S774	1-771-410-21	SWITCH, TACTILE (ENTER)			
S775	1-771-410-21	SWITCH, TACTILE (▼)			
S776	1-771-410-21	SWITCH, TACTILE (P FILE)			
S777	1-771-410-21	SWITCH, TACTILE (GROOVE)			
S778	1-771-410-21	SWITCH, TACTILE (SURROUND)			
S779	1-771-410-21	SWITCH, TACTILE (◁ ▷)			
S780	1-771-410-21	SWITCH, TACTILE (❚❚)			
S781	1-771-410-21	SWITCH, TACTILE (▶▶I)			

****

	A-2007-986-A	PANEL BOARD, COMPLETE (IA)			
	A-4476-126-A	PANEL BOARD, COMPLETE (E3, EA, SP2/6)			
	A-4725-782-A	PANEL BOARD, COMPLETE (E91)			
		**********			
	4-231-581-01	HOLDER (FL)			
		< CAPACITOR >			
C603	1-162-286-21	CERAMIC	220PF	10%	50V (IA)
C604	1-124-257-00	ELECT	2.2uF	20%	50V
C605	1-162-286-21	CERAMIC	220PF	10%	50V (IA)
C606	1-124-257-00	ELECT	2.2uF	20%	50V
C607	1-126-157-11	ELECT	10uF	20%	16V
C608	1-126-157-11	ELECT	10uF	20%	16V
C609	1-162-303-11	CERAMIC	0.0033uF	30%	16V
C610	1-126-157-11	ELECT	10uF	20%	16V
C611	1-126-157-11	ELECT	10uF	20%	16V
C612	1-162-306-11	CERAMIC	0.01uF	30%	16V
C613	1-124-261-00	ELECT	10uF	20%	50V
C614	1-162-294-31	CERAMIC	0.001uF	10%	50V
C615	1-104-664-11	ELECT	47uF	20%	10V
C616	1-126-934-11	ELECT	220uF	20%	16V
C617	1-124-589-11	ELECT	47uF	20%	16V
C618	1-162-306-11	CERAMIC	0.01uF	30%	16V
C619	1-124-589-11	ELECT	47uF	20%	16V
C620	1-162-306-11	CERAMIC	0.01uF	30%	16V
C622	1-126-163-11	ELECT	4.7uF	20%	50V
C623	1-164-159-11	CERAMIC	0.1uF		50V
C624	1-162-306-11	CERAMIC	0.01uF	30%	16V
C625	1-162-306-11	CERAMIC	0.01uF	30%	16V
C626	1-162-306-11	CERAMIC	0.01uF	30%	16V
C627	1-162-306-11	CERAMIC	0.01uF	30%	16V
C628	1-162-306-11	CERAMIC	0.01uF	30%	16V
C629	1-162-306-11	CERAMIC	0.01uF	30%	16V
C630	1-162-294-31	CERAMIC	0.001uF	10%	50V
C631	1-162-294-31	CERAMIC	0.001uF	10%	50V
C651	1-164-159-11	CERAMIC	0.1uF		50V
C652	1-124-261-00	ELECT	10uF	20%	50V
C653	1-124-261-00	ELECT	10uF	20%	50V
C707	1-162-306-11	CERAMIC	0.01uF	30%	16V
C708	1-162-306-11	CERAMIC	0.01uF	30%	16V
C709	1-162-306-11	CERAMIC	0.01uF	30%	16V
C717	1-124-584-00	ELECT	100uF	20%	10V
C718	1-124-584-00	ELECT	100uF	20%	10V
C719	1-124-257-00	ELECT	2.2uF	20%	50V
C721	1-162-294-31	CERAMIC	0.001uF	10%	50V
C722	1-162-305-11	CERAMIC	0.0068uF	30%	16V
C723	1-126-960-11	ELECT	1uF	20%	50V
C724	1-136-495-11	FILM	0.068uF	5%	50V
C725	1-126-959-11	ELECT	0.47uF	20%	50V
C726	1-124-465-00	ELECT	0.47uF	20%	50V
C727	1-137-188-11	FILM	0.15uF	5%	50V
C728	1-162-294-31	CERAMIC	0.001uF	10%	50V
C729	1-126-960-11	ELECT	1uF	20%	50V
C730	1-161-494-00	CERAMIC	0.022uF		25V
C731	1-162-305-11	CERAMIC	0.0068uF	30%	16V
C732	1-136-495-11	FILM	0.068uF	5%	50V
C733	1-104-664-11	ELECT	47uF	20%	10V
C734	1-104-664-11	ELECT	47uF	20%	10V
C735	1-126-961-11	ELECT	2.2uF	20%	50V
C736	1-124-261-00	ELECT	10uF	20%	50V
C737	1-124-261-00	ELECT	10uF	20%	50V
C738	1-124-257-00	ELECT	2.2uF	20%	50V
C739	1-162-215-31	CERAMIC	47PF	5%	50V
C740	1-162-282-31	CERAMIC	100PF	10%	50V
C741	1-124-463-00	ELECT	0.1uF	20%	50V
C742	1-162-215-31	CERAMIC	47PF	5%	50V
C743	1-162-290-31	CERAMIC	470PF	10%	50V
C744	1-162-294-31	CERAMIC	0.001uF	10%	50V
C745	1-126-961-11	ELECT	2.2uF	20%	50V
C746	1-162-306-11	CERAMIC	0.01uF	30%	16V
C747	1-126-961-11	ELECT	2.2uF	20%	50V
C748	1-162-306-11	CERAMIC	0.01uF	30%	16V
C749	1-164-159-11	CERAMIC	0.1uF		50V
		< CONNECTOR >			
CN601	1-793-767-11	CONNECTOR, BOARD TO BOARD 30P			

PANEL

Ref. No.	Part No.	Description				Remark
		< DIODE >				
D608	8-719-084-40	LED SEL5955A-TP15 (GAME)				
D609	8-719-084-40	LED SEL5955A-TP15 (TUNER/BAND)				
D610	8-719-109-85	DIODE MTZJ-T-72-5.1B				
D611	8-719-911-19	DIODE 1SS133T-72				
D612	8-719-084-40	LED SEL5955A-TP15 (TUNER/BAND)				
D613	8-719-084-40	LED SEL5955A-TP15 (CD)				
D614	8-719-084-40	LED SEL5955A-TP15 (CD)				
D615	8-719-084-40	LED SEL5955A-TP15 (TAPE A/B)				
D616	8-719-084-40	LED SEL5955A-TP15 (TAPE A/B)				
D617	8-719-084-40	LED SEL5955A-TP15 (MD (VIDEO))				
D618	8-719-084-40	LED SEL5955A-TP15 (MD (VIDEO))				
D619	8-719-947-53	DIODE MTZJ-T-72-12B				
D620	8-719-947-53	DIODE MTZJ-T-72-12B				
D705	8-719-109-85	DIODE MTZJ-T-72-5.1B				
		< FERRITE BEAD >				
FB603	1-412-473-21	INDUCTOR	0uH			
		< FILTER >				
FL601	1-518-739-11	INDICATOR TUBE, FLUORESCENT				
		< IC >				
IC601	6-800-335-01	IC MB90M407PF-G-607-BND				
IC602	8-759-570-21	IC BA3830F-E2				
IC603	8-759-827-70	IC NJL64H400A-1				
IC616	8-759-647-10	IC uPC2933HF				
IC721	8-759-496-40	IC M65850FP				
IC722	8-759-167-88	IC NJM4565D				
		< JACK >				
J601	1-793-724-11	JACK BLOCK, PIN 3P (GAME INPUT)				
J631	1-785-569-11	JACK (SMALL TYPE) (PHONES)				
J721	1-785-569-11	JACK (SMALL TYPE) (MIC 1)				
J722	1-785-569-11	JACK (SMALL TYPE) (MIC 2)				
		< TRANSISTOR >				
Q601	8-729-900-80	TRANSISTOR	BA1A4M-TP			
Q602	8-729-900-80	TRANSISTOR	BA1A4M-TP			
Q603	8-729-900-80	TRANSISTOR	BA1A4M-TP			
Q604	8-729-900-80	TRANSISTOR	BA1A4M-TP			
Q605	8-729-900-80	TRANSISTOR	BA1A4M-TP			
Q721	8-729-119-78	TRANSISTOR	2SC2785TP-HFE			
		< RESISTOR >				
R601	1-247-883-00	CARBON	150K	5%	1/4W	
R602	1-249-417-11	CARBON	1K	5%	1/4W	
R603	1-249-417-11	CARBON	1K	5%	1/4W	
R604	1-249-441-11	CARBON	100K	5%	1/4W	
R605	1-249-441-11	CARBON	100K	5%	1/4W	
R606	1-247-889-00	CARBON	270K	5%	1/4W	
R607	1-247-889-00	CARBON	270K	5%	1/4W	
R608	1-249-421-11	CARBON	2.2K	5%	1/4W	
R609	1-249-440-11	CARBON	82K	5%	1/4W	
R610	1-249-441-11	CARBON	100K	5%	1/4W	
R611	1-249-437-11	CARBON	47K	5%	1/4W	
R612	1-249-435-11	CARBON	33K	5%	1/4W	
R613	1-249-429-11	CARBON	10K	5%	1/4W	
R614	1-249-435-11	CARBON	33K	5%	1/4W	
R615	1-249-433-11	CARBON	22K	5%	1/4W	
R616	1-249-429-11	CARBON	10K	5%	1/4W	
R617	1-247-883-00	CARBON	150K	5%	1/4W	
R618	1-249-429-11	CARBON	10K	5%	1/4W	
R625	1-249-401-11	CARBON	47	5%	1/4W	
R626	1-249-404-00	CARBON	82	5%	1/4W	
R627	1-249-404-00	CARBON	82	5%	1/4W	
R628	1-249-404-00	CARBON	82	5%	1/4W	
R629	1-249-404-00	CARBON	82	5%	1/4W	
R630	1-249-408-11	CARBON	180	5%	1/4W	
R631	1-249-418-11	CARBON	1.2K	5%	1/4W	
R632	1-249-417-11	CARBON	1K	5%	1/4W	
R633	1-249-416-11	CARBON	820	5%	1/4W	
R634	1-249-414-11	CARBON	560	5%	1/4W	
R635	1-249-413-11	CARBON	470	5%	1/4W	
R636	1-249-410-11	CARBON	270	5%	1/4W	
R645	1-249-429-11	CARBON	10K	5%	1/4W	
R646	1-247-807-31	CARBON	100	5%	1/4W	
R647	1-247-807-31	CARBON	100	5%	1/4W	
R650	1-249-429-11	CARBON	10K	5%	1/4W	
R651	1-247-807-31	CARBON	100	5%	1/4W	
R652	1-249-429-11	CARBON	10K	5%	1/4W	
R653	1-249-429-11	CARBON	10K	5%	1/4W	
R654	1-249-417-11	CARBON	1K	5%	1/4W	
R655	1-247-807-31	CARBON	100	5%	1/4W	
R656	1-247-807-31	CARBON	100	5%	1/4W	
R657	1-249-429-11	CARBON	10K	5%	1/4W	
R658	1-249-429-11	CARBON	10K	5%	1/4W	
R659	1-249-429-11	CARBON	10K	5%	1/4W	
R660	1-247-903-00	CARBON	1M	5%	1/4W	
R661	1-249-429-11	CARBON	10K	5%	1/4W	
R662	1-249-429-11	CARBON	10K	5%	1/4W	
R663	1-249-429-11	CARBON	10K	5%	1/4W	
R680	1-249-411-11	CARBON	330	5%	1/4W	
R681	1-247-843-11	CARBON	3.3K	5%	1/4W	
R682	1-249-434-11	CARBON	27K	5%	1/4W	
R692	1-249-417-11	CARBON	1K	5%	1/4W	
R693	1-249-417-11	CARBON	1K	5%	1/4W	
R694	1-249-417-11	CARBON	1K	5%	1/4W	
R695	1-249-417-11	CARBON	1K	5%	1/4W	
R696	1-249-417-11	CARBON	1K	5%	1/4W	
R697	1-249-417-11	CARBON	1K	5%	1/4W	
R698	1-249-417-11	CARBON	1K	5%	1/4W	
R699	1-249-417-11	CARBON	1K	5%	1/4W	
R721	1-249-429-11	CARBON	10K	5%	1/4W	
R722	1-249-430-11	CARBON	12K	5%	1/4W	
R723	1-249-433-11	CARBON	22K	5%	1/4W	
R724	1-249-433-11	CARBON	22K	5%	1/4W	
R725	1-249-433-11	CARBON	22K	5%	1/4W	
R726	1-249-437-11	CARBON	47K	5%	1/4W	
R727	1-249-433-11	CARBON	22K	5%	1/4W	
R728	1-249-431-11	CARBON	15K	5%	1/4W	
R729	1-249-433-11	CARBON	22K	5%	1/4W	
R730	1-249-433-11	CARBON	22K	5%	1/4W	
R731	1-247-881-00	CARBON	120K	5%	1/4W	

PANEL

Ref. No.	Part No.	Description			Remark
R733	1-249-431-11	CARBON	15K	5%	1/4W
R734	1-247-807-31	CARBON	100	5%	1/4W
R735	1-247-885-00	CARBON	180K	5%	1/4W
R736	1-249-429-11	CARBON	10K	5%	1/4W
R737	1-249-437-11	CARBON	47K	5%	1/4W
R738	1-249-417-11	CARBON	1K	5%	1/4W
R739	1-249-441-11	CARBON	100K	5%	1/4W
R740	1-249-417-11	CARBON	1K	5%	1/4W
R741	1-249-429-11	CARBON	10K	5%	1/4W
R742	1-249-417-11	CARBON	1K	5%	1/4W
R743	1-249-429-11	CARBON	10K	5%	1/4W
R744	1-249-441-11	CARBON	100K	5%	1/4W
R745	1-247-807-31	CARBON	100	5%	1/4W
R746	1-249-417-11	CARBON	1K	5%	1/4W
R747	1-260-089-11	CARBON	150	5%	1/2W
R748	1-249-441-11	CARBON	100K	5%	1/4W
R811	1-249-417-11	CARBON	1K	5%	1/4W
R812	1-249-417-11	CARBON	1K	5%	1/4W
		< VARIABLE RESISTOR >			
RV721	1-227-360-11	RES, VAR, CARBON 50K (ECHO LEVEL)			
RV722	1-227-360-11	RES, VAR, CARBON 50K (MIC LEVEL)			
		< SWITCH >			
S601	1-771-410-21	SWITCH, TACTILE (MD (VIDEO))			
S602	1-771-410-21	SWITCH, TACTILE (TAPE A/B)			
S603	1-771-410-21	SWITCH, TACTILE (CD)			
S604	1-771-410-21	SWITCH, TACTILE (TUNER/BAND)			
S605	1-771-410-21	SWITCH, TACTILE (GAME)			
S606	1-771-410-21	SWITCH, TACTILE (SURROUND SPEAKER MODE)			
		< VIBRATOR >			
X601	1-577-358-21	VIBRATOR, CERAMIC (4MHz)			

****

	A-4475-766-A	POWER AMPLIFIER BOARD, COMPLETE (EA, E3, SP2/6)			
	A-4476-338-A	POWER AMPLIFIRE BOARD, COMPLETE (IA)			
	A-4725-790-A	POWER AMPLIFIER BOARD, COMPLETE (E91)			
		**********			
	7-685-646-79	SCREW +BVTP 3X8 TYPE2 N-S			
		< CAPACITOR >			
C501	1-126-963-11	ELECT	4.7uF	20%	50V
C502	1-162-286-21	CERAMIC	220PF	10%	50V
C503	1-162-282-31	CERAMIC	100PF	10%	50V
C504	1-104-665-11	ELECT	100uF	20%	10V
C507	1-136-495-11	FILM	0.068uF	5%	50V
C508	1-136-495-11	FILM	0.068uF	5%	50V
C509	1-128-560-11	ELECT	22uF	20%	100V
C512	1-162-300-11	CERAMIC	0.01	30%	16V
C513	1-164-159-11	CERAMIC	0.1uF		50V
C514	1-164-159-11	CERAMIC	0.1uF		50V
C541	1-136-165-00	FILM	0.1uF	5%	50V
C542	1-137-844-11	ELECT	2200uF	20%	42V
C544	1-137-749-11	MYLAR	0.1uF		100V

POWER AMPLIFIER

Ref. No.	Part No.	Description			Remark
C545	1-137-749-11	MYLAR	0.1uF		100V
C546	1-137-849-11	ELECT	2200uF	20%	100V
C551	1-126-963-11	ELECT	4.7uF	20%	50V
C552	1-162-286-21	CERAMIC	220PF	10%	50V
C553	1-162-282-31	CERAMIC	100PF	10%	50V
C554	1-104-665-11	ELECT	100uF	20%	10V
C557	1-136-495-11	FILM	0.068uF	5%	50V
C558	1-136-495-11	FILM	0.068uF	5%	50V
C559	1-128-560-11	ELECT	22uF	20%	100V
C581	1-126-967-11	ELECT	47uF	20%	50V
C591	1-136-165-00	FILM	0.1uF	5%	50V
C592	1-137-844-11	ELECT	2200uF	20%	42V
C596	1-137-849-11	ELECT	2200uF	20%	100V
C942	1-126-964-11	ELECT	10uF	20%	50V
C943	1-126-968-11	ELECT	100uF	20%	50V
		< CONNECTOR >			
CN502	1-778-981-21	CONNECTOR, BOARD TO BOARD 13P			
CN503	1-778-981-21	CONNECTOR, BOARD TO BOARD 13P			
CN504	1-506-468-11	PIN, CONNECTOR 3P			
		< DIODE >			
D501	8-719-911-19	DIODE 1SS133T-72			
D502	8-719-911-19	DIODE 1SS133T-72			
D503	8-719-947-70	DIODE MTZJ-T-72-18C			
D504	8-719-947-70	DIODE MTZJ-T-72-18C			
D541	8-719-500-60	DIODE D5SBA20			
D543	8-719-510-68	DIODE D5SBA204101			
D551	8-719-911-19	DIODE 1SS133T-72			
D581	8-719-911-19	DIODE 1SS133T-72			
D941	8-719-150-92	DIODE MTZJ-T-72-33D			
		< EARTH TERMINAL >			
* EP501	1-537-738-21	TERMINAL, EARTH			
* EP502	1-537-738-21	TERMINAL, EARTH			
		< IC >			
IC501	8-749-017-06	IC STK412-150			
		< TRANSISTOR >			
Q501	8-729-140-84	TRANSISTOR	2SC1841TP-PAFAEA		
Q503	8-729-140-82	TRANSISTOR	2SA988TP-PAFAEA		
Q504	8-729-140-84	TRANSISTOR	2SC1841TP-PAFAEA		
Q505	8-729-140-84	TRANSISTOR	2SC1841TP-PAFAEA		
Q506	8-729-119-79	TRANSISTOR	2SC2785TP-FEK		
Q551	8-729-140-84	TRANSISTOR	2SC1841TP-PAFAEA		
Q581	8-729-140-84	TRANSISTOR	2SC1841TP-PAFAEA		
Q831	8-729-119-79	TRANSISTOR	2SC2785TP-FEK		
Q941	8-729-141-83	TRANSISTOR	2SB1375		
		< RESISTOR >			
R501	1-249-417-11	CARBON	1K	5%	1/4W
R502	1-249-438-11	CARBON	56K	5%	1/4W
R503	1-249-412-11	CARBON	390	5%	1/4W
R504	1-249-438-11	CARBON	56K	5%	1/4W
R505	1-249-417-11	CARBON	1K	5%	1/4W

POWER AMPLIFIER

Ref. No.	Part No.	Description			Remark
R506	1-249-433-11	CARBON	22K	5%	1/4W
R507	1-249-441-11	CARBON	100K	5%	1/4W
⚠R508	1-208-603-11	WIREWOUND	0.1	10%	5W F
R509	1-260-076-11	CARBON	10	5%	1/2W
⚠R510	1-208-603-11	WIREWOUND	0.1	10%	5W F
⚠R511	1-212-881-11	FUSIBLE	100	5%	1/4W F
⚠R512	1-202-972-61	FUSIBLE	1	5%	1/4W F
R513	1-249-435-11	CARBON	33K	5%	1/4W
R514	1-249-421-11	CARBON	2.2K	5%	1/4W
R515	1-249-433-11	CARBON	22K	5%	1/4W
R516	1-249-429-11	CARBON	10K	5%	1/4W
R517	1-249-421-11	CARBON	2.2K	5%	1/4W
R518	1-249-435-11	CARBON	33K	5%	1/4W
R519	1-249-439-11	CARBON	68K	5%	1/4W
⚠R520	1-215-872-11	METAL OXIDE	3.3K	5%	1W F
R521	1-249-441-11	CARBON	100K	5%	1/4W
R522	1-249-441-11	CARBON	100K	5%	1/4W
R523	1-249-440-11	CARBON	82K	5%	1/4W
⚠R524	1-215-872-11	METAL OXIDE	3.3K	5%	1W F
R531	1-249-409-11	CARBON	220	5%	1/4W
R532	1-247-897-11	CARBON	560K	5%	1/4W
R533	1-249-437-11	CARBON	47K	5%	1/4W
R541	1-249-441-11	CARBON	100K	5%	1/4W
R542	1-249-441-11	CARBON	100K	5%	1/4W
R551	1-249-417-11	CARBON	1K	5%	1/4W
R552	1-249-438-11	CARBON	56K	5%	1/4W
R553	1-249-412-11	CARBON	390	5%	1/4W
R554	1-249-438-11	CARBON	56K	5%	1/4W
R555	1-249-417-11	CARBON	1K	5%	1/4W
R556	1-249-433-11	CARBON	22K	5%	1/4W
R557	1-249-441-11	CARBON	100K	5%	1/4W
⚠R558	1-208-603-11	WIREWOUND	0.1	10%	5W F
R559	1-260-076-11	CARBON	10	5%	1/2W
⚠R560	1-208-603-11	WIREWOUND	0.1	10%	5W F
⚠R561	1-212-881-11	FUSIBLE	100	5%	1/4W
R581	1-249-435-11	CARBON	33K	5%	1/4W
R582	1-249-435-11	CARBON	33K	5%	1/4W
R591	1-249-441-11	CARBON	100K	5%	1/4W
R592	1-249-441-11	CARBON	100K	5%	1/4W
R942	1-249-429-11	CARBON	10K	5%	1/4W (EXCEPT E91)
R942	1-249-428-11	CARBON	8.2K	5%	1/4W (E91)
R943	1-249-417-11	CARBON	1K	5%	1/4W
R945	1-249-428-11	CARBON	8.2K	5%	1/4W (E91)
R945	1-249-429-11	CARBON	10K	5%	1/4W (EXCEPT E91)

****

SENSOR

Ref. No.	Part No.	Description
	1-681-143-11	SENSOR BOARD
		**********
		< CONNECTOR >
CN701	1-568-951-11	PIN, CONNECTOR 2P
		< THERMISTOR >
TH701	1-807-796-11	THERMISTOR

****

SUB TRANS

Ref. No.	Part No.	Description
	A-4476-114-A	SUB TRANS BOARD, COMPLETE (E3, EA, SP2/6)
	A-4476-773-A	SUB TRANS BOARD, COMPLETE (IA)
	A-4725-793-A	SUB TRANS BOARD, COMPLETE (E91)
		**********
		< CAPACITOR >
⚠C971	1-113-925-11	CERAMIC 0.01uF 20% 250V
⚠C972	1-113-925-11	CERAMIC 0.01uF 20% 250V
C973	1-126-933-11	ELECT 100uF 20% 16V
C975	1-126-768-11	ELECT 2200uF 20% 16V
C976	1-164-159-11	CERAMIC 0.1uF 50V
C977	1-164-159-11	CERAMIC 0.1uF 50V
C978	1-164-159-11	CERAMIC 0.1uF 50V
		< CONNECTOR >
* CN972	1-564-321-21	PIN, CONNECTOR 2P
* CN974	1-568-226-11	PIN, CONNECTOR 2P
		< DIODE >
D971	8-719-911-19	DIODE 1SS133T-72
D972	8-719-024-99	DIODE 11ES2-NTA2B
D973	8-719-024-99	DIODE 11ES2-NTA2B
D974	8-719-024-99	DIODE 11ES2-NTA2B
D975	8-719-024-99	DIODE 11ES2-NTA2B
		< IC >
IC971	8-759-158-62	IC TA78057S
		< TRANSISTOR >
Q971	8-729-119-79	TRANSISTOR 2SC2785TP-FEK
		< RESISTOR >
R974	1-249-441-11	CARBON 100K 5% 1/4W
R975	1-249-429-11	CARBON 10K 5% 1/4W
		< RELAY >
⚠RY971	1-755-276-11	RELAY, POWER
⚠RY972	1-755-276-11	RELAY, POWER
		< SWITCH >
⚠S901	1-786-055-21	SELECTOR, VOLTAGE (VOLTAGE SELECTOR) (EXCEPT E91)
		< TRANSFORMER >
⚠T972	1-437-331-21	TRANSFORMER, POWER

****

VIDEO

Ref. No.	Part No.	Description
	A-4725-689-A	VIDEO BOARD, COMPLETE (E3, EA, SP2/6)
	A-4725-691-A	VIDEO BOARD, COMPLETE (IA)
	A-4725-771-A	VIDEO BOARD, COMPLETE (E91)
		**********
		< CAPACITOR >
C101	1-124-778-00	ELECT CHIP 22uF 20% 6.3V
C102	1-164-670-11	CERAMIC CHIP 1200PF 5% 16V
C103	1-162-968-11	CERAMIC CHIP 0.0047uF 10% 50V

The components identified by mark ⚠ or dotted line with mark ⚠ are critical for safety.
Replace only with part number specified.

VIDEO

Ref. No.	Part No.	Description			Remark
C201	1-124-778-00	ELECT CHIP	22uF	20%	6.3V
C202	1-164-670-11	CERAMIC CHIP	1200PF	5%	16V
C203	1-162-968-11	CERAMIC CHIP	0.0047uF	10%	50V
C304	1-164-388-91	CERAMIC CHIP	270PF	5%	50V
C305	1-162-919-11	CERAMIC CHIP	22PF	5%	50V
C306	1-164-388-91	CERAMIC CHIP	270PF	5%	50V
C307	1-162-919-11	CERAMIC CHIP	22PF	5%	50V
C308	1-162-959-11	CERAMIC CHIP	330PF	5%	50V
C309	1-162-959-11	CERAMIC CHIP	330PF	5%	50V
C310	1-164-156-11	CERAMIC CHIP	0.1uF		25V
C311	1-124-778-00	ELECT CHIP	22uF	20%	6.3V
C312	1-162-968-11	CERAMIC CHIP	0.0047uF	10%	50V
C313	1-164-816-11	CERAMIC CHIP	220PF	2%	50V
C314	1-162-919-11	CERAMIC CHIP	22PF	5%	50V
C315	1-164-217-11	CERAMIC CHIP	150PF	5%	50V
C316	1-164-156-11	CERAMIC CHIP	0.1uF		25V
C317	1-126-193-11	ELECT	1uF	20%	50V
C318	1-164-156-11	CERAMIC CHIP	0.1uF		25V
C319	1-126-206-11	ELECT CHIP	100uF	20%	6.3V
C320	1-126-206-11	ELECT CHIP	100uF	20%	6.3V
C321	1-126-206-11	ELECT CHIP	100uF	20%	6.3V
C322	1-126-206-11	ELECT CHIP	100uF	20%	6.3V
C323	1-126-206-11	ELECT CHIP	100uF	20%	6.3V
C324	1-164-156-11	CERAMIC CHIP	0.1uF		25V
C325	1-164-156-11	CERAMIC CHIP	0.1uF		25V
C401	1-164-156-11	CERAMIC CHIP	0.1uF		25V
C402	1-124-778-00	ELECT CHIP	22uF	20%	6.3V
C504	1-164-156-11	CERAMIC CHIP	0.1uF		25V
C505	1-126-206-11	ELECT CHIP	100uF	20%	6.3V
C506	1-164-156-11	CERAMIC CHIP	0.1uF		25V
C507	1-126-206-11	ELECT CHIP	100uF	20%	6.3V
C508	1-126-206-11	ELECT CHIP	100uF	20%	6.3V
C509	1-115-416-11	CERAMIC CHIP	0.001uF	5%	25V
C510	1-164-156-11	CERAMIC CHIP	0.1uF		25V
C524	1-125-891-11	CERAMIC CHIP	0.47uF	10%	10V
C526	1-162-968-11	CERAMIC CHIP	0.0047uF	10%	50V
C528	1-162-970-11	CERAMIC CHIP	0.01uF	10%	25V
C531	1-126-206-11	ELECT CHIP	100uF	20%	6.3V
C532	1-164-156-11	CERAMIC CHIP	0.1uF		25V
C535	1-164-156-11	CERAMIC CHIP	0.1uF		25V
C536	1-126-193-11	ELECT	1uF	20%	50V
C537	1-126-206-11	ELECT CHIP	100uF	20%	6.3V
C539	1-164-156-11	CERAMIC CHIP	0.1uF		25V
C540	1-126-206-11	ELECT CHIP	100uF	20%	6.3V
C541	1-164-156-11	CERAMIC CHIP	0.1uF		25V
C542	1-126-206-11	ELECT CHIP	100uF	20%	6.3V
C543	1-126-206-11	ELECT CHIP	100uF	20%	6.3V
C544	1-164-156-11	CERAMIC CHIP	0.1uF		25V
C545	1-164-156-11	CERAMIC CHIP	0.1uF		25V
C546	1-164-156-11	CERAMIC CHIP	0.1uF		25V
C547	1-126-193-11	ELECT	1uF	20%	50V
C548	1-164-156-11	CERAMIC CHIP	0.1uF		25V
C549	1-164-156-11	CERAMIC CHIP	0.1uF		25V
C550	1-115-416-11	CERAMIC CHIP	0.001uF	5%	25V
C551	1-164-156-11	CERAMIC CHIP	0.1uF		25V
C552	1-164-156-11	CERAMIC CHIP	0.1uF		25V
C553	1-126-206-11	ELECT CHIP	100uF	20%	6.3V
C555	1-124-778-00	ELECT CHIP	22uF	20%	6.3V
C556	1-164-156-11	CERAMIC CHIP	0.1uF		25V
C559	1-126-206-11	ELECT CHIP	100uF	20%	6.3V
C561	1-162-911-11	CERAMIC CHIP	6PF	0.5PF	50V
C563	1-164-156-11	CERAMIC CHIP	0.1uF		25V
C564	1-164-156-11	CERAMIC CHIP	0.1uF		25V
C565	1-126-206-11	ELECT CHIP	100uF	20%	6.3V
C566	1-164-156-11	CERAMIC CHIP	0.1uF		25V
C568	1-126-206-11	ELECT CHIP	100uF	20%	6.3V
C569	1-126-206-11	ELECT CHIP	100uF	20%	6.3V
C570	1-126-206-11	ELECT CHIP	100uF	20%	6.3V
C571	1-128-065-11	ELECT CHIP	68uF	20%	10V
C574	1-162-919-11	CERAMIC CHIP	22PF	5%	50V
C576	1-162-919-11	CERAMIC CHIP	22PF	5%	50V
C577	1-162-919-11	CERAMIC CHIP	22PF	5%	50V
C581	1-164-156-11	CERAMIC CHIP	0.1uF		25V
		< CONNECTOR >			
CN301	1-564-506-11	PLUG, CONNECTOR 3P			
CN501	1-774-769-11	CONNECTOR, FFC/FPC 25P			
CN502	1-779-416-11	CONNECTOR, FFC (LIF (NON-ZIF)) 13P			
CN503	1-774-766-21	CONNECTOR, FFC/FPC 11P			
		< TRIMMER >			
CT503	1-141-539-11	CAP, ADJ 10PF			
		< DIODE >			
D501	8-719-056-77	DIODE UDZ-TE-17-3.9B			
		< IC >			
IC101	8-759-701-40	IC NJM2100M (TE2)			
IC302	8-759-662-94	IC NJM2255M (TE2)			
IC303	8-759-711-47	IC NJM2209M (TE2)			
IC304	8-759-662-95	IC BA7665FS-E2			
IC501	8-759-530-30	IC TC74VHCU04FT (EL)			
IC502	8-759-830-30	IC M30622MGA-A45FP			
IC504	8-759-530-30	IC TC74VHCU04FT (EL)			
IC505	8-759-535-48	IC CL680T-D1			
IC507	8-759-342-01	IC MSM5416258C-28JSR1			
IC509	8-759-535-62	IC PCM1727E-2/T2			
IC510	6-800-133-01	IC HT23CO20-H001S			
		< JACK >			
J301	1-537-943-11	CONNECTOR (DIN) 1P (S VIDEO OUT)			
		< JUMPER RESISTOR >			
JW101	1-216-864-11	METAL CHIP	0	5%	1/16W
JW201	1-216-864-11	METAL CHIP	0	5%	1/16W
JW413	1-216-864-11	METAL CHIP	0	5%	1/16W
JW501	1-216-864-11	METAL CHIP	0	5%	1/16W
JW504	1-216-864-11	METAL CHIP	0	5%	1/16W
JW505	1-216-864-11	METAL CHIP	0	5%	1/16W
JW513	1-216-864-11	METAL CHIP	0	5%	1/16W
		< COIL >			
L301	1-410-372-21	INDUCTOR	1.8uH		

VIDEO | VIDEO SWITCH

Ref. No.	Part No.	Description			Remark
L302	1-410-372-21	INDUCTOR	1.8uH		
L303	1-410-658-31	INDUCTOR CHIP	220uH		
L504	1-216-296-11	SHORT	0		
L505	1-216-296-00	METAL CHIP	0	5%	1/8W
L509	1-216-296-11	SHORT	0		
L511	1-469-680-21	INDUCTOR	0uH		
L512	1-469-680-21	INDUCTOR	0uH		
L513	1-469-680-21	INDUCTOR	0uH		
		< TRANSISTOR >			
Q301	8-729-900-53	TRANSISTOR	DTC114EKA-T146		
Q501	8-729-900-53	TRANSISTOR	DTC114EKA-T146		
Q502	8-729-900-53	TRANSISTOR	DTC114EKA-T146		
Q531	8-729-140-75	TRANSISTOR	2SD999-T1-CLCK		
		< RESISTOR >			
R101	1-216-833-11	METAL CHIP	10K	5%	1/16W
R102	1-218-851-11	METAL CHIP	1.5K	0.5%	1/16W
R103	1-218-851-11	METAL CHIP	1.5K	0.5%	1/16W
R201	1-216-833-11	METAL CHIP	10K	5%	1/16W
R202	1-218-851-11	METAL CHIP	1.5K	0.5%	1/16W
R203	1-218-851-11	METAL CHIP	1.5K	0.5%	1/16W
R301	1-216-833-11	METAL CHIP	10K	5%	1/16W
R302	1-211-990-11	METAL CHIP	75	0.5%	1/16W
R303	1-211-990-11	METAL CHIP	75	0.5%	1/16W
R304	1-216-809-11	METAL CHIP	100	5%	1/16W
R305	1-216-809-11	METAL CHIP	100	5%	1/16W
R306	1-211-990-11	METAL CHIP	75	0.5%	1/16W
R308	1-216-833-11	METAL CHIP	10K	5%	1/16W
R309	1-216-833-11	METAL CHIP	10K	5%	1/16W
R310	1-216-825-11	METAL CHIP	2.2K	5%	1/16W
R311	1-216-811-11	METAL CHIP	150	5%	1/16W
R312	1-216-833-11	METAL CHIP	10K	5%	1/16W
R313	1-216-833-11	METAL CHIP	10K	5%	1/16W
R314	1-216-826-11	METAL CHIP	2.7K	5%	1/16W
R315	1-218-285-11	RES-CHIP	75	5%	1/16W
R316	1-218-285-11	RES-CHIP	75	5%	1/16W
R317	1-218-285-11	RES-CHIP	75	5%	1/16W
R319	1-211-990-11	METAL CHIP	75	0.5%	1/16W
R403	1-216-825-11	METAL CHIP	2.2K	5%	1/16W
R404	1-216-825-11	METAL CHIP	2.2K	5%	1/16W
R501	1-216-809-11	METAL CHIP	100	5%	1/16W
R502	1-216-809-11	METAL CHIP	100	5%	1/16W
R503	1-216-809-11	METAL CHIP	100	5%	1/16W
R504	1-216-809-11	METAL CHIP	100	5%	1/16W
R505	1-216-809-11	METAL CHIP	100	5%	1/16W
R506	1-216-809-11	METAL CHIP	100	5%	1/16W
R507	1-216-833-11	METAL CHIP	10K	5%	1/16W
R508	1-216-833-11	METAL CHIP	10K	5%	1/16W
R511	1-216-833-11	METAL CHIP	10K	5%	1/16W
R512	1-216-833-11	METAL CHIP	10K	5%	1/16W
R513	1-216-833-11	METAL CHIP	10K	5%	1/16W
R516	1-216-833-11	METAL CHIP	10K	5%	1/16W
R517	1-216-833-11	METAL CHIP	10K	5%	1/16W
R518	1-216-833-11	METAL CHIP	10K	5%	1/16W
R519	1-216-809-11	METAL CHIP	100	5%	1/16W
R520	1-216-825-11	METAL CHIP	2.2K	5%	1/16W
R521	1-216-833-11	METAL CHIP	10K	5%	1/16W
R523	1-216-803-11	METAL CHIP	33	5%	1/16W
R524	1-216-825-11	METAL CHIP	2.2K	5%	1/16W
R526	1-216-849-11	METAL CHIP	220K	5%	1/16W
R528	1-216-845-11	METAL CHIP	100K	5%	1/16W
R530	1-216-809-11	METAL CHIP	100	5%	1/16W
R531	1-216-809-11	METAL CHIP	100	5%	1/16W
R532	1-216-864-11	METAL CHIP	0	5%	1/16W
R533	1-216-864-11	METAL CHIP	0	5%	1/16W
R534	1-216-833-11	METAL CHIP	10K	5%	1/16W
R535	1-216-833-11	METAL CHIP	10K	5%	1/16W
R536	1-216-813-11	METAL CHIP	220	5%	1/16W
R537	1-216-809-11	METAL CHIP	100	5%	1/16W
R538	1-216-833-11	METAL CHIP	10K	5%	1/16W
R539	1-216-864-11	METAL CHIP	0	5%	1/16W
R540	1-216-864-11	METAL CHIP	0	5%	1/16W
R542	1-218-847-11	METAL CHIP	1K	0.5%	1/16W
R543	1-218-881-11	METAL CHIP	27K	0.5%	1/16W
R544	1-218-855-11	METAL CHIP	2.2K	0.5%	1/16W
R545	1-216-809-11	METAL CHIP	100	5%	1/16W
R546	1-216-821-11	METAL CHIP	1K	5%	1/16W
R548	1-216-821-11	METAL CHIP	1K	5%	1/16W
R549	1-216-809-11	METAL CHIP	100	5%	1/16W
R550	1-216-809-11	METAL CHIP	100	5%	1/16W
R551	1-216-809-11	METAL CHIP	100	5%	1/16W
R552	1-216-809-11	METAL CHIP	100	5%	1/16W
R555	1-216-857-11	METAL CHIP	1M	5%	1/16W
R556	1-216-809-11	METAL CHIP	100	5%	1/16W
R557	1-216-809-11	METAL CHIP	100	5%	1/16W
R560	1-218-849-11	METAL CHIP	1.2K	0.5%	1/16W
R561	1-218-847-11	METAL CHIP	1K	0.5%	1/16W
R562	1-216-833-11	METAL CHIP	10K	5%	1/16W
R564	1-216-837-11	METAL CHIP	22K	5%	1/16W
R577	1-216-837-11	METAL CHIP	22K	5%	1/16W
R578	1-216-837-11	METAL CHIP	22K	5%	1/16W
R579	1-216-833-11	METAL CHIP	10K	5%	1/16W
R580	1-216-833-11	METAL CHIP	10K	5%	1/16W
		< VIBRATOR >			
X501	1-781-155-21	VIBRATOR, CERAMIC (10MHz)			
X503	1-767-519-11	VIBRATOR, CRYSTAL (27MHz)			

****

	1-680-892-11	VIDEO SWITCH BOARD			
		**********			
		< CAPACITOR >			
C401	1-126-964-11	ELECT	10uF	20%	50V
C402	1-126-961-11	ELECT	2.2uF	20%	50V
C403	1-126-961-11	ELECT	2.2uF	20%	50V
C451	1-126-964-11	ELECT	10uF	20%	50V
C452	1-126-961-11	ELECT	2.2uF	20%	50V
C781	1-104-665-11	ELECT	100uF	20%	10V
C782	1-162-970-11	CERAMIC CHIP	0.01uF	10%	25V
C784	1-126-964-11	ELECT	10uF	20%	50V
C785	1-126-916-11	ELECT	1000uF	20%	6.3V
C786	1-162-957-11	CERAMIC CHIP	220PF	5%	50V
C788	1-126-964-11	ELECT	10uF	20%	50V

Ref. No.	Part No.	Description	Remark
		< CONNECTOR >	
CN403	1-785-331-11	PIN, CONNECTOR (LIGHT ANGLE) 5P	
CN607	1-785-330-11	PIN, CONNECTOR (LIGHT ANGLE) 4P	
* CN781	1-564-518-11	PLUG, CONNECTOR 3P	
		< DIODE >	
D781	8-719-988-61	DIODE 1SS355TE-17	
D782	8-719-988-61	DIODE 1SS355TE-17	
		< IC >	
IC401	8-759-525-25	IC BU4052BCF-E2	
IC781	8-759-295-90	IC NJM2244M-TE2	
		< JACK >	
J401	1-774-227-11	JACK, PIN 1P (VIDEO OUT)	
J402	1-770-612-12	JACK, PIN 2P (AUDIO OUT)	
		< TRANSISTOR >	
Q401	8-729-113-13	TRANSISTOR FA1A4M-T1L33	
		< RESISTOR >	
R401	1-216-845-11	METAL CHIP 100K 5% 1/16W	
R402	1-216-845-11	METAL CHIP 100K 5% 1/16W	
R403	1-216-845-11	METAL CHIP 100K 5% 1/16W	
R404	1-216-821-11	METAL CHIP 1K 5% 1/16W	
R405	1-216-845-11	METAL CHIP 100K 5% 1/16W	
R451	1-216-845-11	METAL CHIP 100K 5% 1/16W	
R452	1-216-845-11	METAL CHIP 100K 5% 1/16W	
R453	1-216-845-11	METAL CHIP 100K 5% 1/16W	
R454	1-216-821-11	METAL CHIP 1K 5% 1/16W	
R455	1-216-845-11	METAL CHIP 100K 5% 1/16W	
R481	1-216-833-11	METAL CHIP 10K 5% 1/16W	
R782	1-216-845-11	METAL CHIP 100K 5% 1/16W	
R783	1-218-285-11	RES-CHIP 75 5% 1/16W	

****

MISCELLANEOUS
****

⚠13	1-757-852-11	CORD, CONNCTION	
15	1-690-589-31	WIRE (FLAT TYPE) (13 CORE) (EXCEPT E91)	
15	1-769-987-11	WIRE (FLAT TYPE) (13 CORE) (E91)	
16	1-757-421-11	WIRE (FLAT TYPE) (25 CORE)	
101	1-773-045-11	WIRE (FLAT TYPE) (17 CORE)	
⚠108	1-777-071-51	CORD, POWER	
509	1-791-983-12	WIRE (FLAT TYPE) (8 CORE)	
535	1-541-632-12	MOTOR, CD (TURN)	
602	1-782-817-11	WIRE (FLAT TYPE) (16 CORE)	
⚠603	A-4735-189-A	BU-30 (61) ASSY	
HP901	A-2004-771-A	BASE (A) ASSY, HEAD	
HRP901	A-2004-772-A	BASE (B) ASSY, HEAD	
M721	A-4672-826-A	MOTOR ASSY	
M901	X-3378-241-1	MOTOR ASSY (CAPSTAN)	
M961	1-763-072-11	FAN, D.C.	
PM901	1-454-887-32	SOLENOID, PLUNGER	
PM901	1-454-887-32	SOLENOID, PLUNGER	
⚠T910	1-437-356-11	POWER TRANSFOMER	

****

Ref. No.	Part No.	Description	Remark
		**********	
		HARDWARE LIST	
		**********	
#1	7-685-647-79	SCREW +BVTP 3X10 TYPE2 N-S	
#2	7-685-103-19	+ PTPWH (2X5)	
#3	7-685-650-79	SCREW +BVTP 3X16 TYPE2 N-S	
#4	7-685-881-09	SCREW +BVTT 4X8 (S)	
#5	7-627-853-28	SCREW, PRECISION +P 2X3 TYPE3	
#6	7-628-254-05	SCREW +PS 2.6X5	
#7	7-623-921-01	RING, RETAINING, CAPSTAN	

****

ACCESSORIES & PACKING MATERIALS
****

	1-569-008-21	ADAPTOR, CONVERSION 2P (EXCEPT E91)	

The components identified by mark ⚠ or dotted line with mark ⚠ are critical for safety.
Replace only with part number specified.

REVISION HISTORY

Clicking the version allows you to jump to the revised page.
Also, clicking the version at the upper right on the revised page allows you to jump to the next revised page.

Ver.	Date	Description of Revision
1.1	2001.07	Correction of BASE UNIT SECTION in EXPLODED VIEWS. (SPM-01022)
1.0	2001.04	New