Silicon NPN Power Transistors 2SD1910

DESCRIPTION

- With TO-3PML package
- High breakdown voltage
- High speed switching
- Built-in damper diode

APPLICATIONS

- For use in TV horizontal output applications

PINNING

PIN	DESCRIPTION
1	Base
2	Collector
3	Emitter

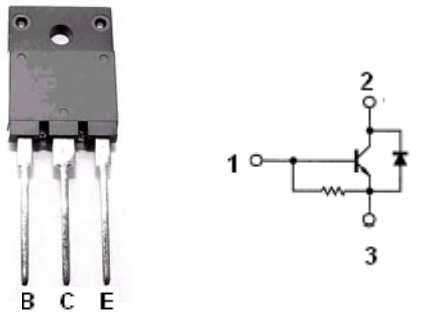

Fig.1 simplified outline (TO-3PML) and symbol

Absolute maximum ratings(T_a=25℃)

SYMBOL	PARAMETER	CONDITIONS	VALUE	UNIT
V_{CBO}	Collector-base voltage	Open emitter	1500	V
V_{CEO}	Collector-emitter voltage	Open base	600	V
V_{EBO}	Emitter-base voltage	Open collector	6	V
I_C	Collector current		3	A
I_{CM}	Collector current-peak		6	A
P_C	Collector power dissipation	T_C=25℃	40	W
T_j	Junction temperature		150	℃
T_{stg}	Storage temperature		-55~150	℃

CHARACTERISTICS

Tj=25℃ unless otherwise specified

SYMBOL	PARAMETER	CONDITIONS	MIN	TYP.	MAX	UNIT
$V_{CEO(SUS)}$	Collector-emitter sustaining voltage	I_C=0.1A , I_B=0	600			V
$V_{CE(sat)}$	Collector-emitter saturation voltage	I_C=2.5A ; I_B=0.8A			5.0	V
$V_{BE(sat)}$	Base-emitter saturation voltage	I_C=2.5A ; I_B=0.8A			1.5	V
I_{CBO}	Collector cut-off current	V_{CB}=800V; I_E=0			10	μ A
I_{EBO}	Emitter cut-off current	V_{EB}=6V; I_C=0	50		200	mA
h_{FE}	DC current gain	I_C=0.5A ; V_{CE}=5V	8		25	
V_F	Diode forward voltage	I_F=3A			2.0	V

Silicon NPN Power Transistors 2SD1910

PACKAGE OUTLINE

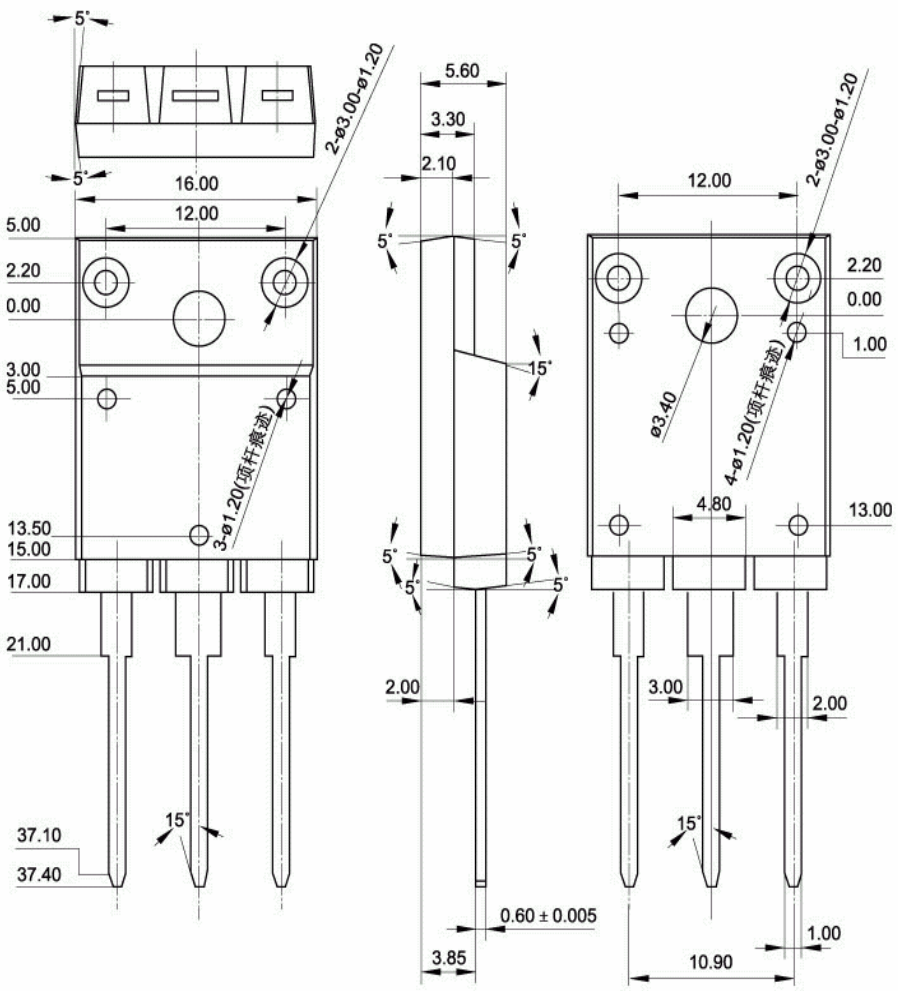

Fig.2 outline dimensions (unindicated tolerance:±0.10 mm)